THIS DRAWING AND THE SUBJECT MATTER SHOWN THEREON ARE CONFIDENTIAL AND THE PROPERTY OF BEL/STEWART/TRP CONNECTOR AND SHALL NOT BE REPRODUCED, COPIED, OR USED IN ANY MANNER WITHOUT THE WRITTEN CONSENT OF TRP CONNECTOR.

PRODUCT MAY BE PROTECTED BY ONE OR MORE OF THE FOLLOWING US PATENTS:
5736910 5939955 6425781 6428361 6554638 6840817 7123117
7429195 7717749 7808751 6217391 6149050 7924130

REVISIONS

P	LTR	DESCRIPTION	DATE	DWN	APVD
	D	EC-1411035 COMPANY LOGO CHANGE	13JAN2015	TL	KZ

MECHANICAL:

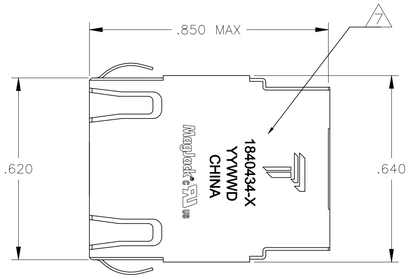

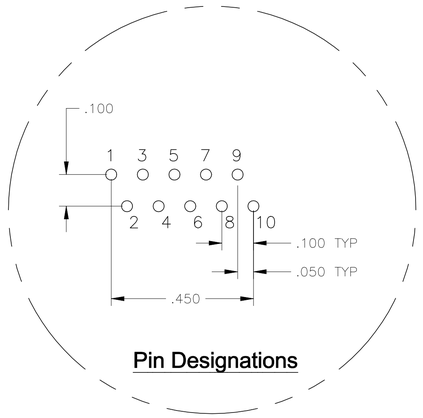

Pin Designations

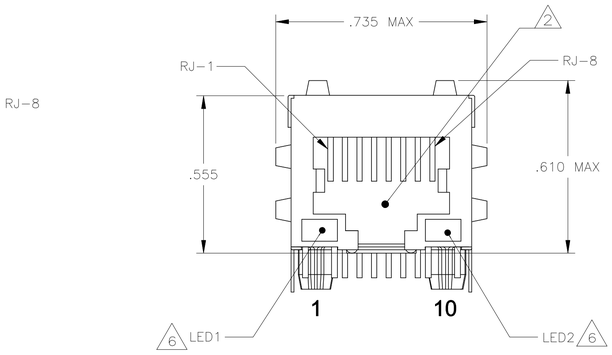

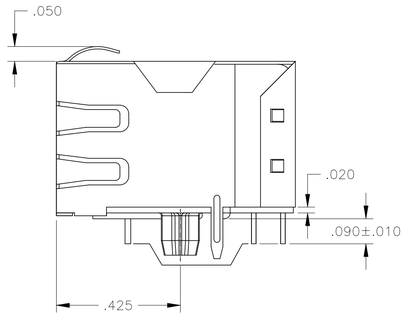

1. MATERIALS:
HOUSING - THERMOPLASTIC PET POLYESTER FLAMMABILITY RATING UL 94V-0.
SHIELD - .008" THICK, C26800 BRASS PREPLATED WITH 30µINCH SEMI-BRIGHT NICKEL. SOLDER TABS POST DIPPED WITH 100µINCH MIN SAC SOLDER.
MOD JACK CONTACTS - 0.0157 X 0.018" PHOSPHOR BRONZE, 50µINCH MIN OVERALL NICKEL UNDERPLATE, WITH SELECT 50µINCH MIN HARD GOLD FINISH PLATE SOLDERTAILS WITH 100µINCH MIN MATTE TIN AND/OR SAC SOLDER DIP.
LIGHT EMITTING DIODE(LED) - DIFFUSED EPOXY LENS, .020" x .020" CARBON STEEL WIREFRAME LEADS PRE-PLATED WITH 80µINCH SILVER OVER 40µINCH NICKEL UNDERPLATE OVER 40µINCH COPPER UNDERPLATE. POST-PLATED WITH 100µINCH MIN MATTE TIN AND/OR SAC SOLDER DIP OR PURE TIN SOLDER DIP.

2. RJ45 JACK CAVITY CONFORMS TO FCC RULES AND REGULATIONS PART 68, SUB PART F.

3. MAGNETICS
-APPLICATION: 10/100/1000 BASE-T
-IMPEDANCE: 100 OHMS
-TURNS RATIO (CHIP:CABLE): 1:1 ALL FOUR PAIRS
-OPEN CIRCUIT INDUCTANCE (OCL): 350µH MIN @100kHz, 0.1VRMS, 8mADC BIAS FROM 0°CTO 70°C, ALL FOUR PAIRS
-ALL FOUR PAIRS BI-DIRECTIONAL
-PERFORMANCE @ 25°C:
INSERTION LOSS (IL): 1.1dB MAX FROM 0.5MHz TO 100MHz
RETURN LOSS (RL): 18dB MIN FROM 0.5MHz TO 40MHz
12-20LOG(f/80)dB MIN FROM 40.1MHz TO 100MHz
CROSSTALK ATTENUATION: 35dB MIN FROM 0.5MHz TO 40MHz
33-20LOG(f/50)dB MIN FROM 40.1MHz TO 100MHz
COMMON MODE REJECTION RATIO (CMRR): 30dB MIN FROM 0.5MHz TO 100MHz
-ISOLATION VOLTAGE: COMPLIES WITH IEEE802.3 2002, PARA 40.6.1.1, ITEM b

4. OPERATING TEMPERATURE: FROM 0°C TO +70°C

5. THE MAGNETICS ARE SYMMETRIC, AND SUPPORT AUTO-MDI/MDIX.

6. THE 250 OHM RESISTOR IS OPTIONAL, PLEASE SEE CHART FOR PRESENCE OR ABSENCE OF LED RESISTORS.
IF LEDS WITHOUT 250 OHM RESISTOR, LEDS ARE DRIVEN WITH CONSTANT CURRENT AT APPROX 20 mA
LED COLOR: DOMINANT WAVELENGTH (λD): GREEN 568 nm TYP @ IF=20 mA
FORWARD VOLTAGE (VF): GREEN 2.2V TYP @ IF=20 mA
DOMINANT WAVELENGTH (λD): YELLOW 588 nm TYP @ IF=20 mA
FORWARD VOLTAGE (VF): YELLOW 2.1V TYP @ IF=20 mA
IF LEDS WITH BUILT-IN RESISTOR, LEDS ARE DRIVEN WITH 5V VOLTAGE AND THE MAX OPERATING CURRENT IS 20mA.
LED COLOR: DOMINANT WAVELENGTH (λD): GREEN 568 nm TYP @ VF=5V
FORWARD CURRENT (IF): GREEN 12mA TYP @ VF=5V
DOMINANT WAVELENGTH (λD): YELLOW 588 nm TYP @ VF=5V
FORWARD CURRENT (IF): YELLOW 13mA TYP @ VF=5V

7. TRP CONNECTOR LOGO, PART NUMBER, DATE CODE, COUNTRY OF ORIGIN AND AGENCY APPROVAL MARKING IN APPROXIMATE LOCATION SHOWN.

8. THESE PARTS ARE RECOMMENDED FOR WAVE SOLDERING PROCESS, PREHEAT TEMPERATURE IS 120°C TO 160°C, 120 SECONDS TO 180 SECONDS, PEAK WAVE SOLDERING TEMPERATURE IS 260°C MAX, 10 SECONDS MAX.

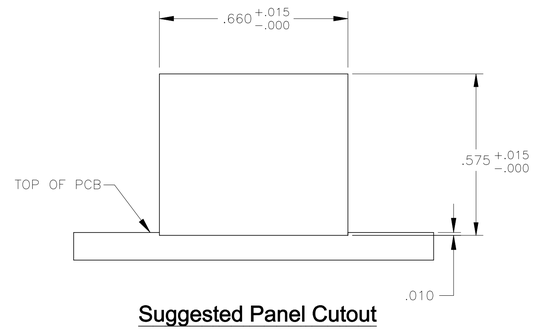

Suggested Panel Cutout

ELECTRICAL:

4G46P1 GIGABIT CIRCUIT 3 5

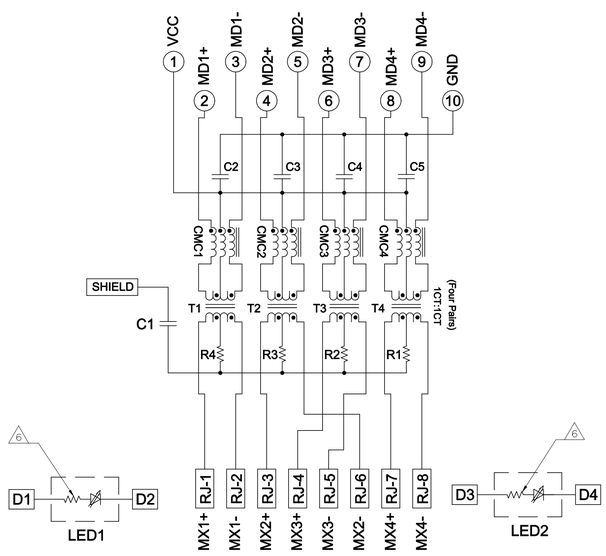

C1=1000 pF, 2kV CAPACITOR
R1-R4=75 OHMS, 5%, 1/16W RESISTOR
C2-C5=0.1uF, 10%, 50V CAPACITOR

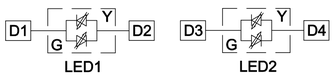

LED CONFIGURATION
FOR BI-COLOR

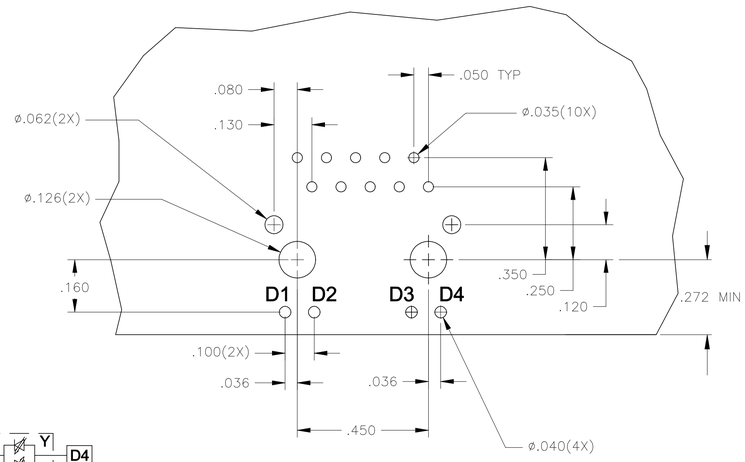

Suggested PCB Layout
(Component Side)

OBSOLETE	GREEN	YES	GREEN	YES	~~1-1840434-1~~
	YELLOW	NO	YELLOW	NO	~~1-1840434-0~~
	YELLOW	NO	GREEN	NO	~~1840434-9~~
	GREEN	NO	YELLOW	NO	~~1840434-8~~
	GREEN	NO	GREEN	NO	~~1840434-7~~
	GREEN/YELLOW	NO	GREEN/YELLOW	NO	1840434-6
	GREEN/YELLOW	NO	GREEN	NO	1840434-5
OBSOLETE	GREEN/YELLOW	NO	GREEN	YES	~~1840434-4~~
	YELLOW	YES	YELLOW	YES	~~1840434-3~~
	YELLOW	YES	GREEN	YES	~~1840434-2~~
	GREEN	YES	YELLOW	YES	~~1840434-1~~
	LED 1	250 OHMS RESISTOR 6	LED 2	250 OHMS RESISTOR 6	PART NUMBER

THIS DRAWING IS A CONTROLLED DOCUMENT.

DIMENSIONS: INCHES

TOLERANCES UNLESS OTHERWISE SPECIFIED:
0 PLC ± –
1 PLC ± –
2 PLC ± .010
3 PLC ± .005
4 PLC ± –
ANGLES ± –

PRODUCT SPEC 108-2100
APPLICATION SPEC –

DWN CLOUD ZENG 17APR2007
CHK DENNIS CHEN 17APR2007
APVD TEDDY XIONG 17APR2007

trp CONNECTOR a bel group — DONGGUAN CHINA

MODEL NAME: MAGJACK SINGLE NON-POE

DESC: 1X1 4G46P1 GIGABIT TAB DOWN W/ LED

SIZE A1 | CAGE CODE | DRAWING NO C-1840434 | RESTRICTED TO –

CUSTOMER DRAWING | SCALE NTS | SHEET 1 OF 1 | REV D

TRP Connector

Downloaded from Arrow.com.