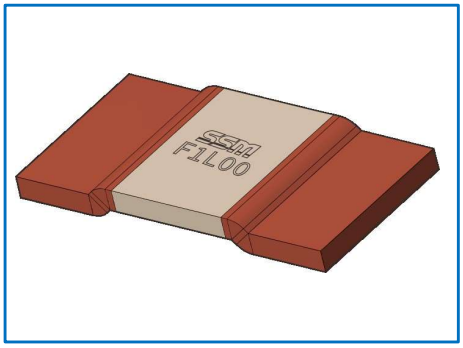

High-Precision Low-TCR Alloy Current Sensing Resistors

■ MSRSF series

AEC-Q200 Compliant

Features

- The MSRSF series is based on precision resistive alloy and welded. with vacuum electron beam welding equipment to ensure its characteristics and reliability.
- Precision machining and uniform welding provide a minimum tolerance of ±0.5% without trimming.
- The TCR achieves a minimum of ±25ppm/°C over a wide temperature range of -55°C to +170°C (3920 5930) and -55°C to +125°C (2512).
- The "Trimming-free" technology avoids current loss and is free of hot spots.
- The thermoelectric power is extremely low and thermal fluctuations are minimized.

Lead free | Halogen free | RoHS Compliance

Applications

- Automotive Electronics
- Precision Power Supply
- Instrumentation
- Medical Equipment

◆ Electrical Specification

Series	Size inch. (mm)	Resistance Value	Power	Max.Operating Current	Operating Temperature	TCR (20℃Ref)	Tolerance	Thermal Resistance	PKG.
MSRSF	2512 (6330)	3 mΩ	4 W	36 A	-55~170 ℃	±25 ppm/℃	± 0.5 % ±1 % ±5 %	19.7 ℃/W	4,000 pcs.
		5 mΩ	2.5 W	22 A				31.1 ℃/W	
	3920 (10052)	1 mΩ	8 W	89 A				7.8 ℃/W	2,000 pcs.
		2 mΩ	6 W	55 A				15.4 ℃/W	
		3 mΩ	5 W	41 A				23 ℃/W	
		4 mΩ	4 W	32 A				31.1 ℃/W	
		5 mΩ	3 W	25 A				38.4 ℃/W	
	5930 (15078)	1 mΩ	10 W	100 A				6.4 ℃/W	
		2 mΩ	8W	63 A				12.6 ℃/W	
		3 mΩ	6 W	45 A				19.1 ℃/W	

◆ Dimensions

Resistor

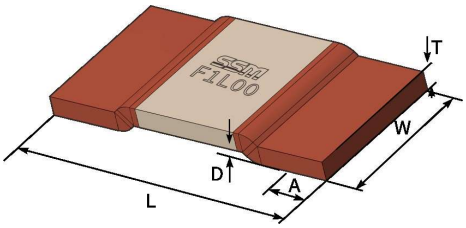

Land Pattern

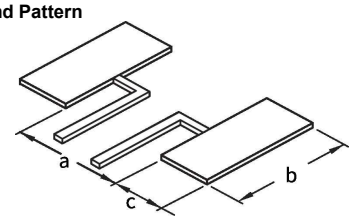

Not following the recommended land pattern design can seriously affect the temperature coefficient measurement results and current sensing accuracy!

Series	Size inch. (mm)	Resistance Value	Unit:mm							
			L	W	A	T	D	a	b	c
MSRSF	2512 (6330)	3 mΩ	6.3±0.3	3.0±0.3	1.3±0.3	0.45±0.2	0.35±0.2	3.9±0.2	3.4±0.25	1.8±0.25
		5 mΩ	6.3±0.3	3.0±0.3	1.3±0.3	0.27±0.15	0.35±0.2	3.9±0.2	3.4±0.25	1.8±0.25
	3920 (10052)	1 mΩ	10.0±0.3	5.2±0.3	2.0±0.3	1.3±0.2	0.5±0.2	5.6±0.1	6.2±0.2	2.7±0.2
		2 mΩ	10.0±0.3	5.2±0.3	2.0±0.3	0.65±0.2	0.5±0.2	5.6±0.1	6.2±0.2	2.7±0.2
		3 mΩ	10.0±0.3	5.2±0.3	2.0±0.3	0.45±0.2	0.5±0.2	5.6±0.1	6.2±0.2	2.7±0.2
		4 mΩ	10.0±0.3	5.2±0.3	2.0±0.3	0.33±0.15	0.5±0.2	5.6±0.1	6.2±0.2	2.7±0.2
		5 mΩ	10.0±0.3	5.2±0.3	2.0±0.3	0.27±0.15	0.5±0.2	5.6±0.1	6.2±0.2	2.7±0.2
	5930 (15078)	1 mΩ	15.0±0.3	7.75±0.3	3.8±0.3	1.05±0.2	0.5±0.2	5.6±0.1	8.75±0.2	5.2±0.2
		2 mΩ	15.0±0.3	7.75±0.3	3.8±0.3	0.53±0.2	0.5±0.2	5.6±0.1	8.75±0.2	5.2±0.2
		3 mΩ	15.0±0.3	7.75±0.3	3.8±0.3	0.35±0.2	0.5±0.2	5.6±0.1	8.75±0.2	5.2±0.2

◆ Part Number information

M S R S F 2 5 1 2 P 5 L 0 0 F 4 P 0

Series (5 digits)	Size (4 digits)	TCR (1 digits)	Resistance (4 digits)	Tolerance (1 digits)	Quantity (3 digits)
MSRSF	2512 3920 5930	P:±25 ppm/℃	1L00 = 1 mΩ 2L00 = 2 mΩ 3L00 = 3 mΩ 4L00 = 4 mΩ 5L00 = 5 mΩ	D:±0.5 % F:±1 % J:±5 %	2P0 = 2,000 pcs. 4P0 = 4,000 pcs.

Downloaded from Arrow.com.

◆ Performance

Test	Test Method	Standards	Typical	Max.
High Temperature Storage	1000h@+170°C, unpowered	AEC-Q200 TEST 3 MIL-STD-202 Method 108	ΔR≤±0.5%	ΔR≤±1.0%
Thermal Shock	-55°C, 15min~ambient temperature <20s~+155°C, 15min, 1000 cycles	AEC-Q200 TEST 16 MIL-STD-202 Method 107	ΔR≤±0.1%	ΔR≤±0.5%
Bias Humidity	+85°C, 85%RH, powered no less than 10% rated power for1000h	AEC-Q200 TEST 7 MIL-STD-202 Method 103	ΔR≤±0.2%	ΔR≤±0.5%
Load Life	2000h @ +70°C, rated power, 90min on, 30min off +70°C refers to terminal temperature	AEC-Q200 TEST 8 MIL-STD-202 Method 108	ΔR≤±0.5%	ΔR≤±1.0%
Resistance to Solvent	Immerse in solvent for 3 min and wipe 10 times. Three cycles ofthree solvents. Dry at ambient temperature after cleaning	AEC-Q200 TEST 12 MIL-STD-202 Method 215	Clear marking. No visible damage	
Mechanical Shock	Half Sine Wave, peak acceleration 100g's, pulse duration 6ms, 3 times in each of six directions, on three different axes	AEC-Q200 TEST 13 MIL-STD-202 Method 213	ΔR≤±0.01%	ΔR≤±0.2%
Vibration	10-2KHz, 5g's, 20min/cycle, 12 cycles in each directions of X Y Z	AEC-Q200 TEST 14 MIL-STD-202 Method 204	ΔR≤±0.01%	ΔR≤±0.2%
Resistance to Solder Heat	+260°C tin bath for 10s	AEC-Q200 TEST 15 MIL-STD-202 Method 210	ΔR≤±0.2%	ΔR≤±0.5%
Solderability	+245°C tin bath for 3s	AEC-Q200 TEST 18 IEC 60115-1 4.17	No visible damage. 95% minimum coverage	
TCR	-55℃ and +170℃, +20℃ Ref.	AEC-Q200 TEST 19 IEC 60115-1 4.8	Within the nominal TCR	
Substrate Bending	2mm. Duration: 60s.	AEC-Q200 TEST 21 AEC-Q200-005	ΔR≤±0.1%	ΔR≤±0.5%
Short Time Overload	5x rated voltage, 5s	IEC 60115-1 4.13	ΔR≤±0.1%	ΔR≤±0.5%
Low Temperature Storage	-55℃ for 96h, unpowered	IEC 60068-2-1	ΔR≤±0.1%	ΔR≤±0.5%
Moisture Resistance	Apply T=24 h/cycle, zero power,method 7a and 7b are not required	MIL-STD-202 Method 106	ΔR≤±0.1%	ΔR≤±0.5%

◆ Derating Curve

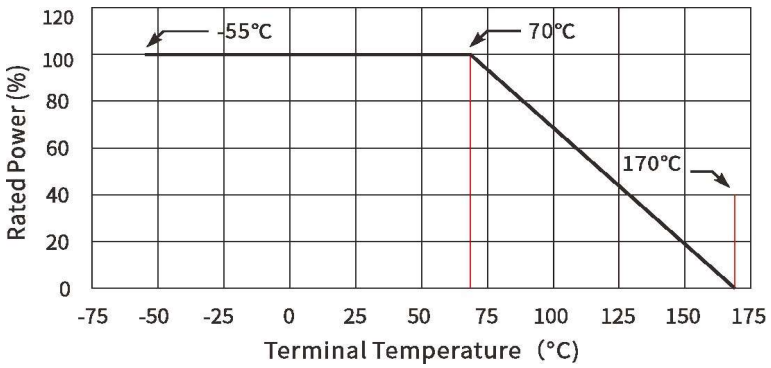

◆ Reflow Soldering Profile

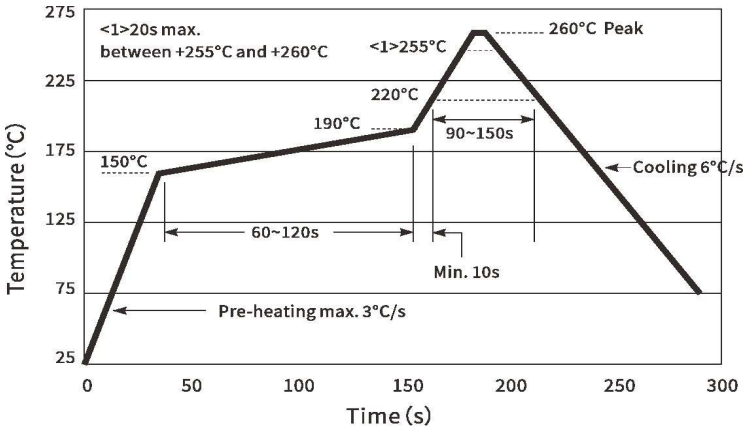

Resistor Surface Temperature :
Pre-Heat: +150℃+190℃,60~120sec.
Reflow: Above +220℃,90~150sec.
Applicable Solder Composition: Sn-Ag-Cu

Downloaded from Arrow.com.

◆ Maximum Pulse Energy Curve

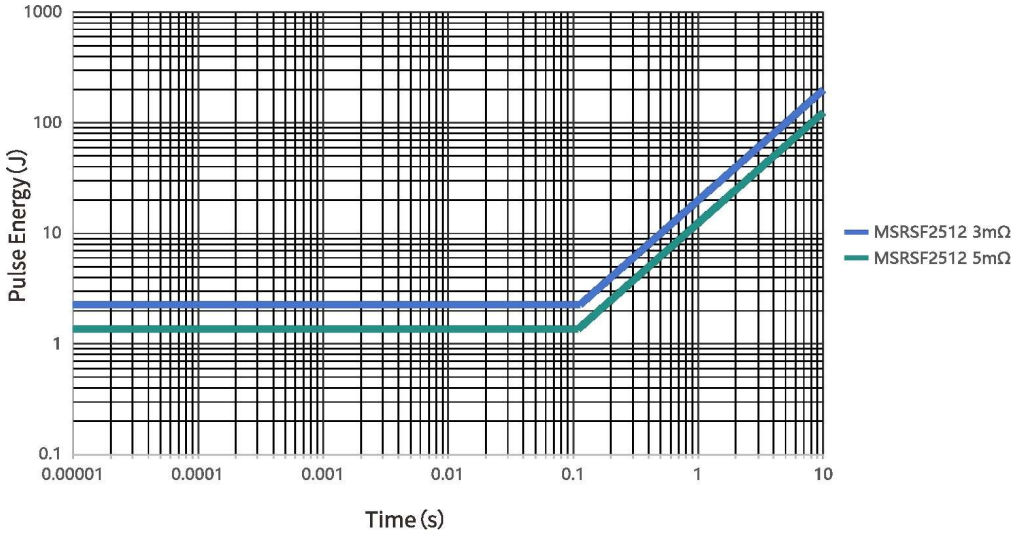

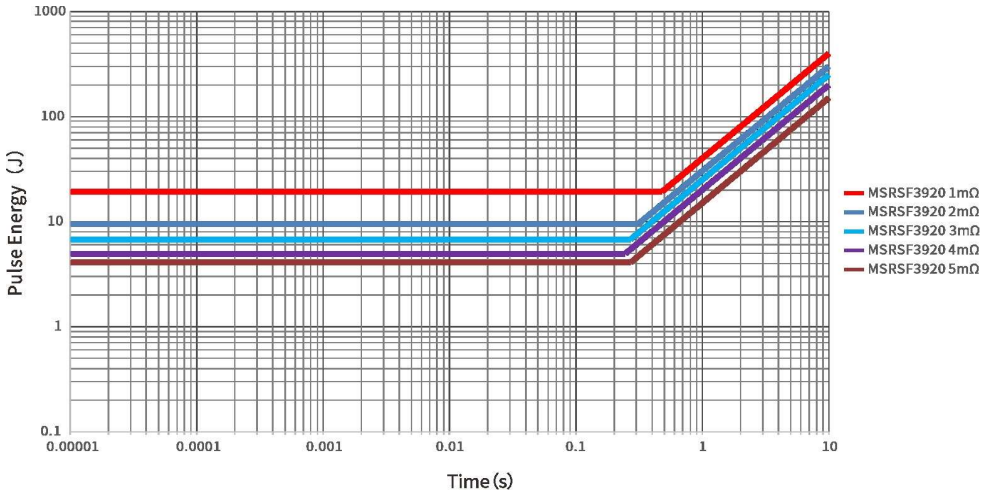

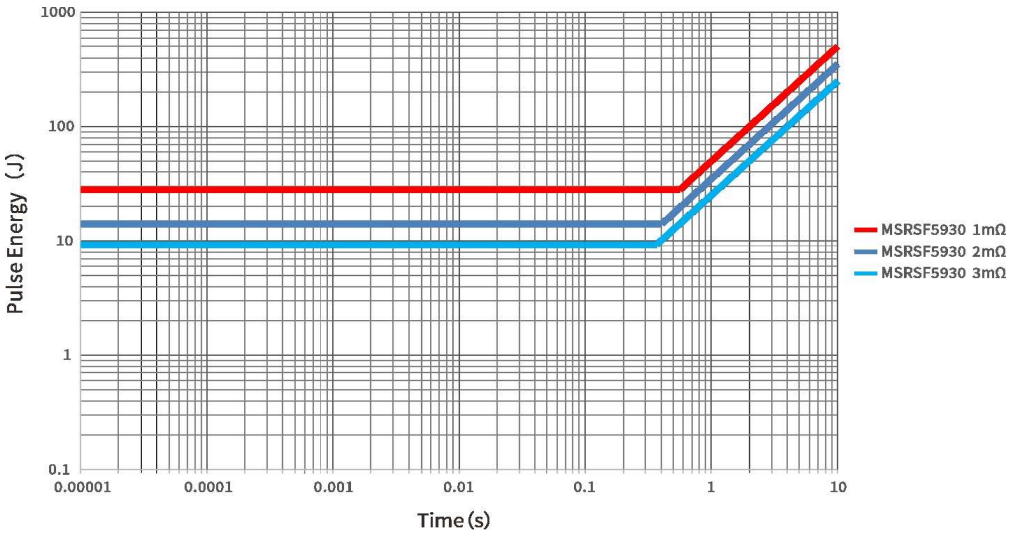

Downloaded from Arrow.com.

◆ Temperature Coefficient of Resistance Test Curve

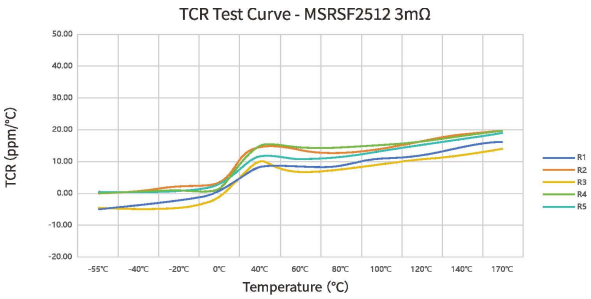

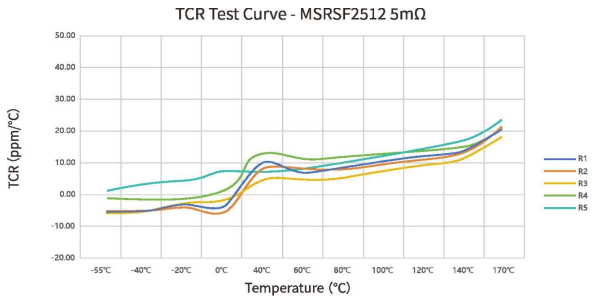

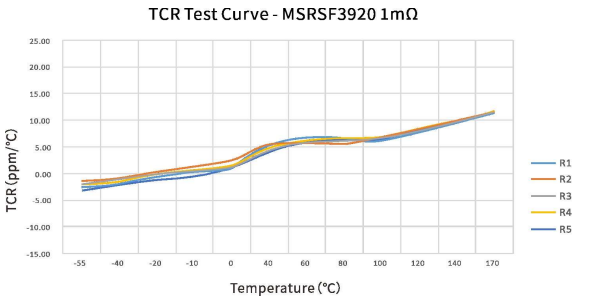

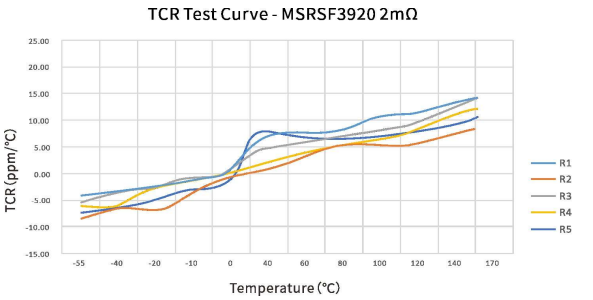

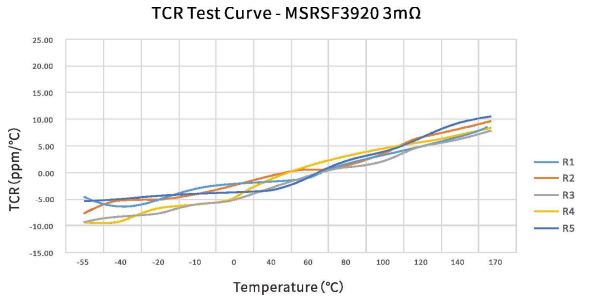

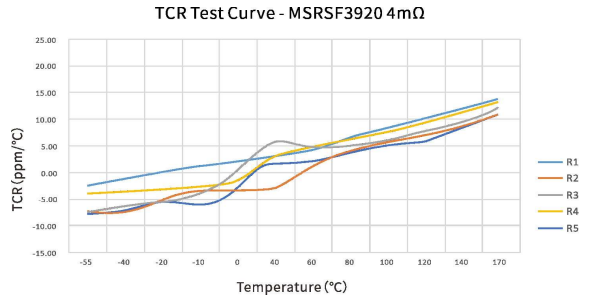

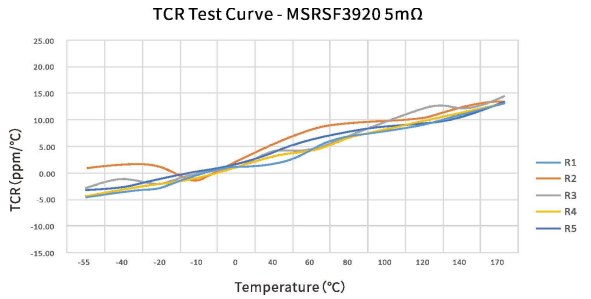

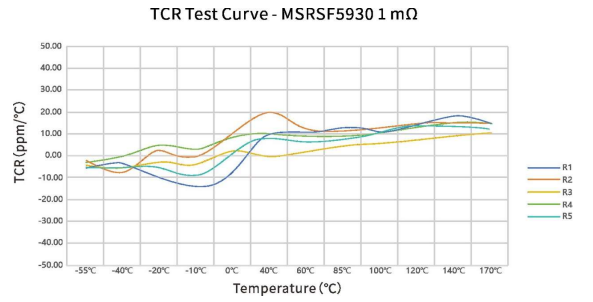

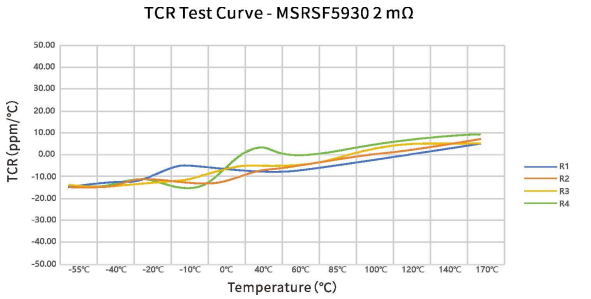

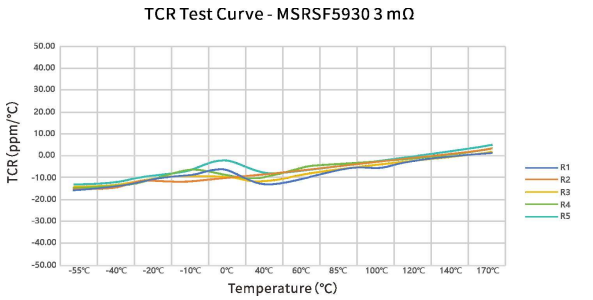

Downloaded from Arrow.com.

◆ Construction & Marking

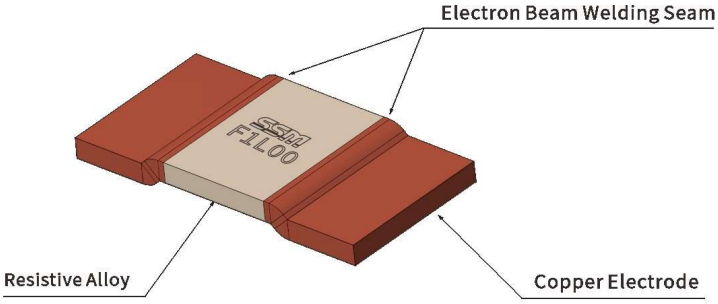

SSM : Brand
F : Tolerance
2L00 : Resistance

◆ Tape Specification

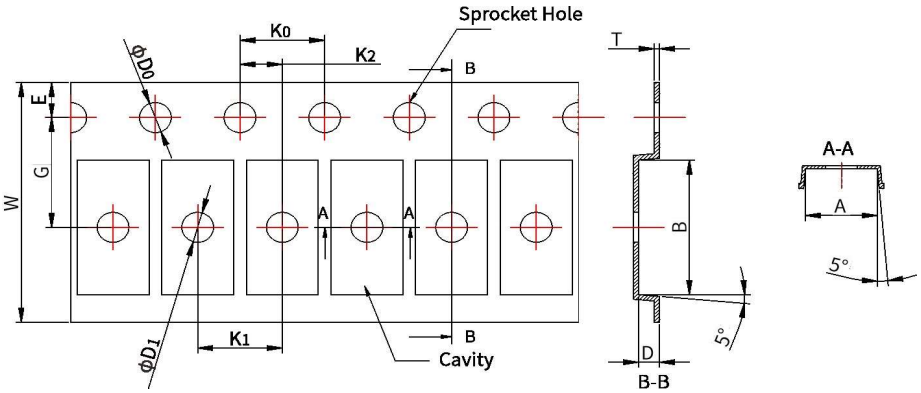

Series	Size inch. (mm)	Resistance Value	Unit:mm											
			A	B	φD0	φD1	K0	K1	K2	E	G	W	D	T
MSRSF	2512 (6330)	3 mΩ	3.30±0.1	6.60±0.1	1.5±0.1	1.5±0.1	4.00±0.1	4.00±0.1	2.00±0.1	1.75±0.1	5.50±0.05	12.00±0.2	0.90±0.1	0.23±0.05
		5 mΩ	3.20±0.1	6.50±0.1	1.5±0.1	1.5±0.1	4.00±0.1	4.00±0.1	2.00±0.1	1.75±0.1	5.50±0.05	12.00±0.2	0.73±0.1	0.23±0.05
	3920 (10052)	1 mΩ	5.5±0.2	10.5±0.2	1.5±0.1	1.5±0.1	4.00±0.1	8.00±0.1	2.00±0.1	1.75±0.1	7.50±0.1	16.00±0.3	2.1±0.1	0.3±0.05
		2 mΩ	5.5±0.2	10.5±0.2	1.5±0.1	1.5±0.1	4.00±0.1	8.00±0.1	2.00±0.1	1.75±0.1	7.50±0.1	16.00±0.3	1.5±0.1	0.3±0.05
		3 mΩ	5.5±0.2	10.5±0.2	1.5±0.1	1.5±0.1	4.00±0.1	8.00±0.1	2.00±0.1	1.75±0.1	7.50±0.1	16.00±0.3	1.5±0.1	0.3±0.05
		4 mΩ	5.65±0.2	10.41±0.2	1.5±0.1	1.5±0.1	4.00±0.1	8.00±0.1	2.00±0.1	1.75±0.1	7.50±0.1	16.00±0.3	1.14±0.1	0.4±0.05
		5 mΩ	5.65±0.2	10.41±0.2	1.5±0.1	1.5±0.1	4.00±0.1	8.00±0.1	2.00±0.1	1.75±0.1	7.50±0.1	16.00±0.3	1.14±0.1	0.4±0.05
	5930 (15078)	1 mΩ	8.05±0.2	15.3±0.2	1.5±0.1	1.5±0.1	4.00±0.1	4.00±0.1	2.00±0.1	1.75±0.1	11.5±0.05	24.0±0.3	1.9±0.1	0.3±0.05
		2 mΩ	8.05±0.2	15.3±0.2	1.5±0.1	1.5±0.1	4.00±0.1	4.00±0.1	2.00±0.1	1.75±0.1	11.5±0.05	24.0±0.3	1.3±0.1	0.3±0.05
		3 mΩ	8.05±0.2	15.3±0.2	1.5±0.1	1.5±0.1	4.00±0.1	4.00±0.1	2.00±0.1	1.75±0.1	11.5±0.05	24.0±0.3	1.3±0.1	0.3±0.05

◆ Reel Specification

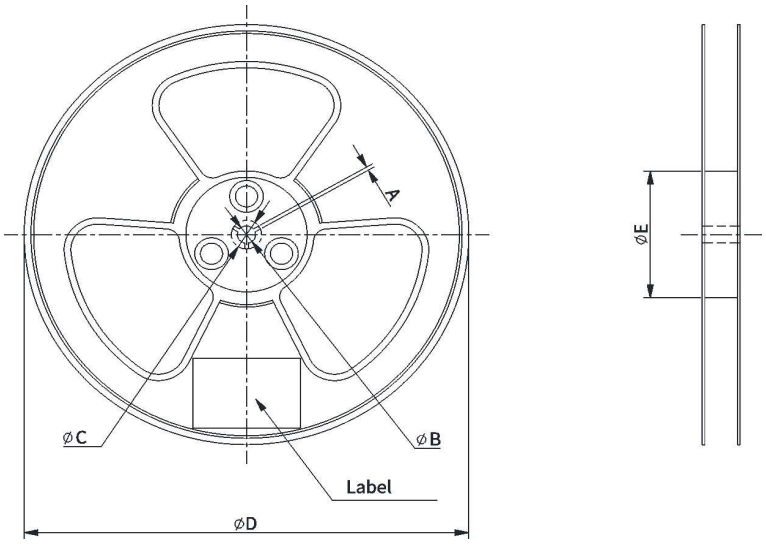

Series	Size inch. (mm)	Unit:mm				
		A	φB	φC	φD	φE
MSRSF	2512 (6330) 3920 (10052) 5930 (15078)	1.5 Min.	13.0+0.5/-0.2	20.2 Min.	330±2	100±2

Downloaded from Arrow.com.

◆ Packaging

Size 3920(10052): 2000 pcs/reel, 6 reel/box
Size 5930(15078): 2000 pcs/reel, 3 reel/box

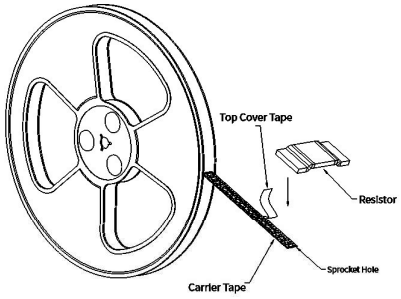

1. Resistors are packed in a tape and wrapped in a reel.

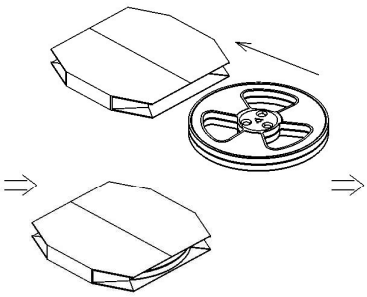

2. Packed in a cardboard box. The size of the cardboard is 335mm*340mm*37mm.

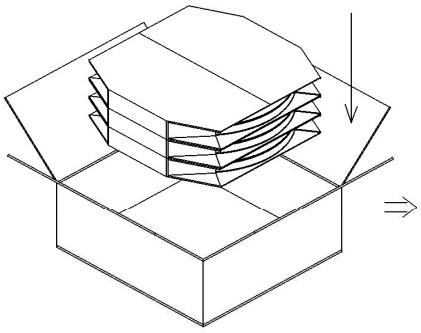

3. Put the reels in the box.

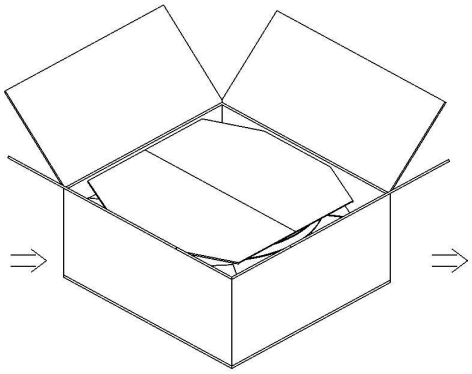

4. If the last box is not full, bubble wrap or EPE should be placed to prevent the product from shaking or vibration.

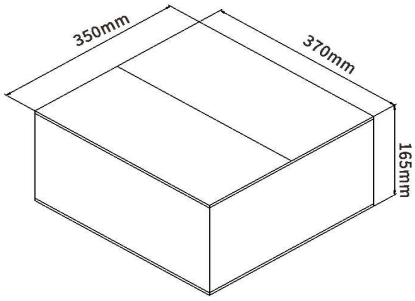

5. Box size: 350mm*370mm*165mm

◆ Storage Instructions

（1） Resistors should be stored at a temperature of 5 to 35°C, with a humidity of <60% RH.
The humidity should be kept as low as possible.
（2） Resistors should be protected from direct sunlight.
（3） Resistors should be stored in a clean and dry environment free of harmful gases (HCl, Sulfuric acid, H_2S, etc.)
（4） Do not move the resistor from the packaging unless use it.
（5） Under the above storage conditions, the resistor can be stored for at least 1 year.

◆ Usage Suggestions

(1) Please protect the surface of the resistor during use. Prevent defects such as scratches, bumps, and oil stains on the surface.
(2) Do not use sharp tweezers to move the resistor. Scratches on the surface can cause resistance drift and resistor failure.
(3) When installing and using resistors, avoid the impact of mechanical stress on the resistor.
(4) The long-term operating power of resistors should be ≤ rated power to avoid resistance drift caused by long-term overload.
(5) Please refer to the derating curve when operating under high temperature conditions or poor heat dissipation environment.
(6) If the operating conditions exceed the pulse specified in the pulse curve, a systematic evaluation is required.
(7) If the resistor is not used after being moved from the packaging, it should be stored under vacuum to avoid risks such as poor welding caused by oxidation of the resistor.

Downloaded from Arrow.com.