Part number description :
10134251-XXXLF

- LF: Lead Free, RoHs compliant, see note
- XXX : Color ref or/and version

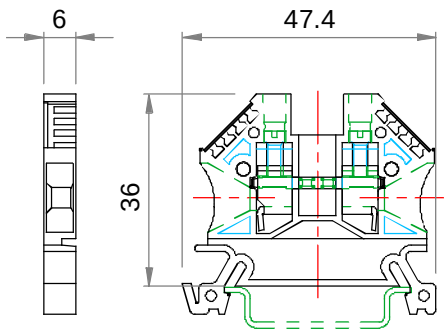


Note : THIS PRODUCT MEETS EUROPEAN UNION DIRECTIVES AND OTHER COUNTRY REGULATIONS AS PER GS-47-0004

| PN | Colour | Version |
|---|---|---|
| **10134251-001LF** | grey | |
| **10134251-002LF** | black | |
| **10134251-003LF** | blue | |
| **10134251-004LF** | brown | |
| **10134251-005LF** | yellow-green | |
| **10134251-006LF** | green | |
| **10134251-007LF** | yellow | |
| **10134251-008LF** | orange | |
| **10134251-009LF** | red | |
| **10134251-010LF** | white | |

## TECHNICAL DATA / DIMENSIONS

| | |
|---|---|
| ***Dimensions*** | |
| Width mm | 6.0 |
| Length mm | 47.4 |
| Height mm | 36.0 |
| Mounting type (EN 60715) | Omega TH35 |
| ***Technical data*** | |
| Maximum load current | 32A |
| Insulating material | PA |
| Self-extinguishing degree acc. to UL94 | V2 |
| Rated surge voltage | 8kV |
| Pollution degree | 3 |
| Surge voltage category | III |
| Insulating material group | I |
| Nominal Voltage | 1000V |
| Nominal Current | 32A |
| ***Connection data*** | |
| Conductor cross-section solid min/max | 0.50 / 6 $mm^2$ |
| Conductor cross-section stranded min/max | 0.50 / 6 $mm^2$ |
| AWG min/max | 24-10AWG |
| Max conductor cross-section stranded with ferrule with plastic sleeve | 4 $mm^2$ / L=12 mm |
| Stripping length | max 9 mm |
| Screw | M3 |
| Tightening torque | 0,6Nm / 7. 0 Lb-In |

***APPROVALS***

AWG 24-10 – 600V – 30A

**RINA**

EN60947-7-1 4$mm^2$ – 1000V – 32A

## ACCESSORIES

| Item | Description |
|---|---|
| *Marking* | |
| ***10134398-001LF*** | Blank single-digit marking tags |
| ***10134398-002LF ÷ 10134398-011LF*** | Printed single-digit marking tags numbered : 1÷0 |
| ***10134398-012LF ÷ 10134398-041LF*** | Printed single-digit marking tags with letter: A÷Z |
| ***10134399-001LF*** | Marking tag adapter |
| ***10134400-001LF*** | Blank Marking tags |
| ***10134401-001LF*** | Blank Marking tags |
| ***DIN RAIL system - Mounting and Installation material*** | |
| ***10134392-001LF*** | Steel Omega Rail TH35x7,5mm -2mt length |
| ***10134393-001LF*** | Slotted Steel Omega Rail TH35x7,5mm -2mt length |
| ***10134394-001LF*** | Steel Omega Rail TH35x15mm -2mt length |
| ***10134395-001LF*** | Slotted Steel Omega Rail TH35x15mm -2mt length |
| ***10134387-001LF*** | Angled support bracket |
| ***10134389-001LF*** | End Bracket for TH35 Omega rail -Width 9mm |
| ***10134390-001LF*** | End Bracket for TH35 Omega rail -Width 6mm |
| ***10134391-001LF*** | Fast-snap End Bracket for TH35 Omega rail |
| ***Additional items*** | |
| ***10134259-001LF*** | End Plate for SCREW Terminal Blocks 2.5/4 |
| ***10134263-001LF*** | Separator for SCREW Terminal Blocks 2.5/4 |
| ***10134272-001LF*** | Jumper bar 2 poles,pitch 6,1mm J4 |
| ***10134272-002LF*** | Jumper bar 3 poles,pitch 6,1mm J4 |
| ***10134272-003LF*** | Jumper bar 24 poles,pitch 6,1mm J4 |
| ***10134271-002LF*** | Ratchet Cutting Tool for jumper bar J4 -yellow |
| ***10134276-001LF*** | Red test plug adapter |
| ***10134276-002LF*** | Black test plug adapter |

| | | | | | | | |
|---|---|---|---|---|---|---|---|
| spec ref | | dr | Aymeric Soudy | 11-06-2015 | projection | size A3 | scale 1:1 |
| tolerance std ISO 406 ISO 1101 | TOLERANCES UNLESS OTHERWISE SPECIFIED | eng | Aymeric Soudy | 11-06-2015 | mm | ecn no | |
| | | chr | | | | rel level | |
| | | appr | Aymeric Soudy | 11-06-2015 | product family DIN Terminal Block | | |
| surface ISO 1302 | linear 0.X ± 0.3; 0.XX ± 0.1; 0.XXX ± 0.05; angular 0° ± 2° | www.fci.com | title SCREW Terminal block 4 | | dwg no 10134251 | rev A | |
| | | | cat. no. - | Product customer drawing | | sheet 1 of 1 | |

Copyright FCI.

Downloaded from Arrow.com.