Printed Circuit Mount

# 14A Series

## One-4-All™ Triple Output Transformers

### For 5 VDC and ±12 VDC or ±15 VDC Regulated Power Supllies Requiring International Safety Certification

Signal's 14A triple output transformers have PC board mounting capability plus all of the performance features of our split bobbin 14A series.

### General Specifications

- Power - 20 VA to 56 VA
- Dielectric Strength - 4000 Vrms Hipot
- Primaries - Dual 115/230 V, 50/60 Hz
- Secondaries - Dual complementary outputs
- Insulation System - Class F, 155° C, UL 1446 (E66312)
- Flammability Rating - Bobbin and shroud material meet UL 94-V0

### Agency Certifications

- UL recognized to UL 506 / UL 5085-2, File # E63829
- CSA certified to C22.2 No. 66.1, File # 221070
- VDE certified to VDE 0805 / EN 60950, File # 1446

signal TRANSFORMER
a bel group

belfuse.com/signal

Downloaded from Arrow.com.

Please read our datasheet & drawing disclaimer here.

## Part Number Selection

| Part Number | VA | DC Output | | Suggested Components ($C_2$ and $C_4$ See Note 1) | | | | | |
|---|---|---|---|---|---|---|---|---|---|
| | Size | Regulator I | Regulator II | $C_1$ | IC1 [3] | IC2 [3] | IC3 [3] | D1 [4] | D2 [4] |
| 14A-20-512 | 20 | 5 V @ 750 mA | ±12 V @ 200 mA | 2.3 KMFD @ 50 VDC | LM-323K-5 | LM-340K-12 | LM-320K-12 | PE20 | PF20 |
| 14A-20-515 | 20 | 5 V @ 750 mA | ±15 V @ 175 mA | | LM-323K-5 | LM-340K-15 | LM-320K-15 | PE20 | PF20 |
| 14A-30-512 | 30 | 5 V @ 1.25 A | ±12 V @ 250 mA | 4.1 KMFD @ 15 VDC | LM-323K-5 | LM-340K-12 | LM-320K-12 | PE20 | PF20 |
| 14A-30-515 | 30 | 5 V @ 1.25 A | ±15 V @ 200 mA | | LM-323K-5 | LM-340K-15 | LM-320K-15 | PE20 | PF20 |
| 14A-56-512 | 56 | 5 V @ 3 A | ±12 V @ 300 mA | 10.0 KMFD @ 15 VDC | LM-338 [2] | LM-340K-12 | LM-320K-12 | PP20 | PF20 |
| 14A-56-515 | 56 | 5 V @ 3 A | ±15 V @ 250 mA | | LM-338 [2] | LM-340K-15 | LM-320K-15 | PP20 | PF20 |

Note 1: Output capacitors $C_2$ and $C_4$ are required to stabilize regulators. Values can be 1 MFD min. tantalum or 10 MFD min. electrolytic, 20 V min.
Note 2: LM-338 is an adjustable regulator and MFR's specifications (National Semiconductor) should be consulted for values of external components.
Note 3: All ICs are National Semiconductor types.
Note 4: All bridges are EDI types.

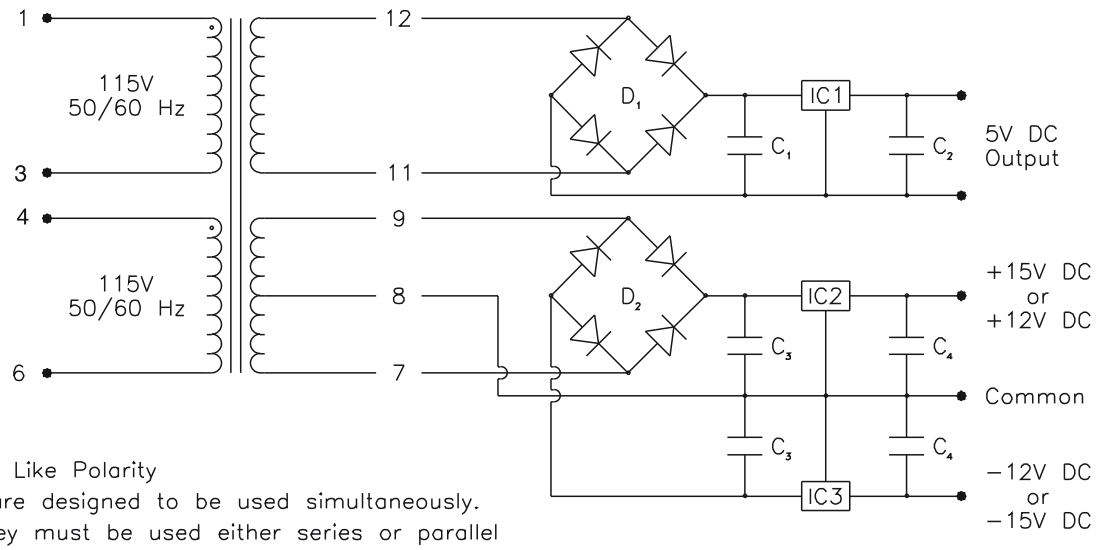


∘ Indicates Like Polarity
Primaries are designed to be used simultaneously. That is, they must be used either series or parallel connected (as one winding).

**Custom versions available upon request.**

128 Atlantic Avenue, Lynbrook, NY 11563
Toll Free 866-239-5777 | Tel 516-239-5777 | Fax 516-239-7208
sales@signaltransformer.com | techhelp@signaltransformer.com
**belfuse.com/signal**

© 2019 Signal Transformer Specifications subject to change without notice 

Downloaded from Arrow.com.

## Mechanical Specifications

| VA | Mechanical Dimensions | | | | | | | Sq. Pin Dimensions | Mounting Dimensions | | | Mounting Screw | | Weight |
|---|---|---|---|---|---|---|---|---|---|---|---|---|---|---|
| | L | W | H* | A | B | C | D | | M | N | P | | | |
| Size | Inches (mm) | | | | | | | | | | | Size | Qty | lbs (kg) |
| 20 | 2.25 (57.2) | 1.87 (47.6) | 1.62 (41.3) | 0.40 (10.2) | 0.40 (10.2) | 1.46 (37.1) | 0.20 (5.1) | 0.036 (0.91) | 1.50 (38.1) | - | - | #4 | 2 | 0.90 (0.41) |
| 30 | 2.62 (66.7) | 2.18 (55.5) | 1.56 (39.7) | 0.55 (13.9) | 0.27 (7.0) | 1.68 (42.7) | 0.27 (7.0) | 0.045 (1.14) | - | 1.75 (44.4) | 2.18 (55.5) | #6 | 4 | 1.15 (0.52) |
| 56 | 3.00 (76.2) | 2.50 (63.5) | 1.83 (46.5) | 0.60 (15.2) | 0.30 (7.6) | 1.90 (48.3) | 0.30 (7.6) | 0.045 (1.14) | - | 2.00 (50.8) | 2.50 (6.35) | #6 | 4 | 1.70 (0.77) |

* Dimension H represents the total distance from the seating plane to the uppermost surface, stand offs and/or risers inclusive.

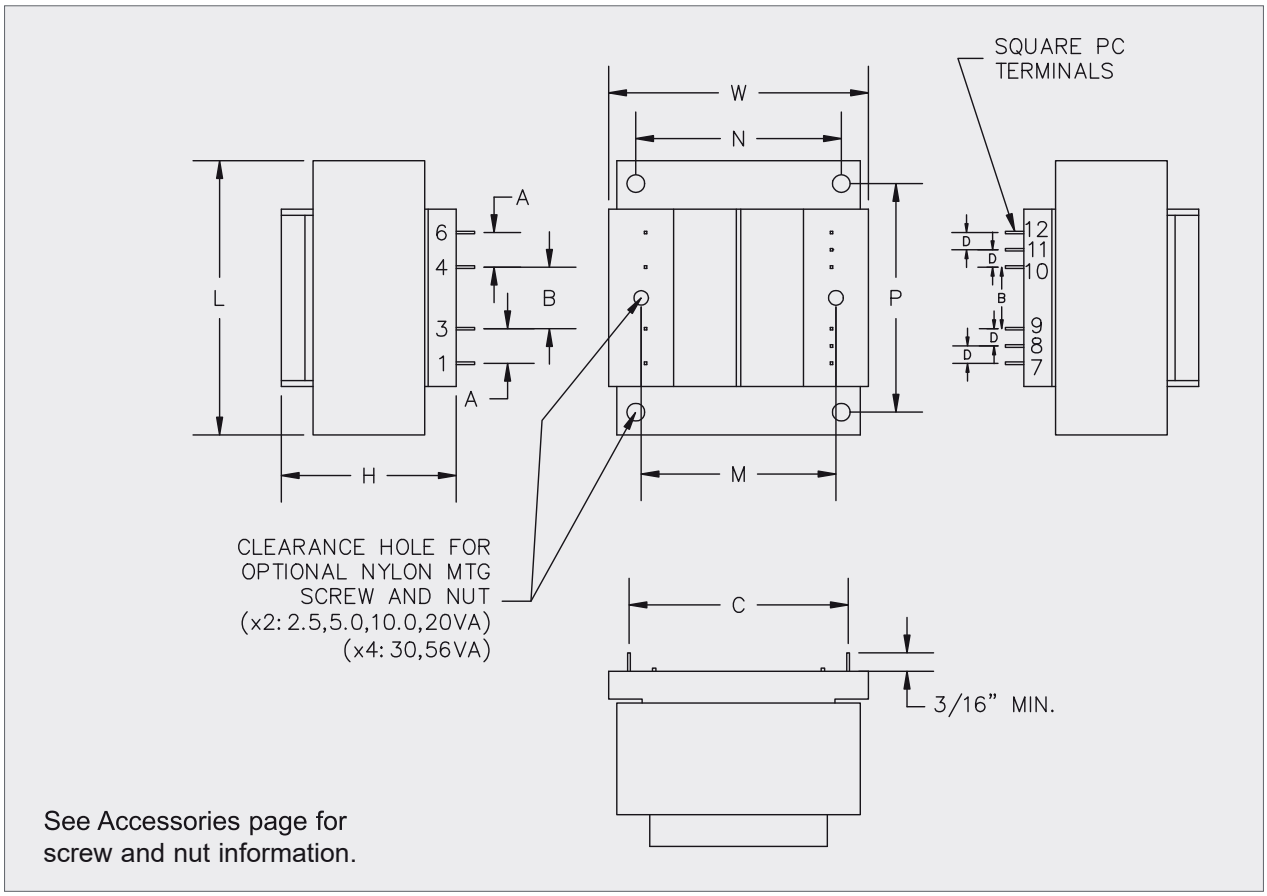


**Custom versions available upon request.**

128 Atlantic Avenue, Lynbrook, NY 11563
Toll Free 866-239-5777 | Tel 516-239-5777 | Fax 516-239-7208
sales@signaltransformer.com | techhelp@signaltransformer.com
belfuse.com/signal

© 2019 Signal Transformer Specifications subject to change without notice 

Downloaded from Arrow.com.