DRAWING NO. SD034764

REV	DATE	DESCRIPTION	ECO	BY	C'H'K.
C	07/16/2015 00:00:00 AM	FOCUS REQUEST FPN1507024 --	40972	AS	MB

COPPER AIRCRAFT CABLE MIL-W-5036	MS20659 DASH NO. (5)	STUD SIZE	CATALOG NUMBER (5)	C	N	Z MIN.	Y MAX.	L MAX.	T	B MIN.	R REF.	INSTALLATION TOOLING: NON - HYDRAULIC: NON - RATCHET	NON - HYDRAULIC: RATCHET	NON - HYDRAULIC: PNEUMATIC	HYDRAULIC: Y29B, Y29NC	HYDRAULIC: Y35, Y35BH, Y39, Y39BH, Y750, Y750BH
AN 12 - 10	----	8	YAV10T11	.38	.19	.26	.78	.97	.06	.40	.25	Y10D, Y10-22	Y10MRPA WITH J1022NC5 DIE MR8G98, MR89Q, Y8MRB1, MR20	Y6NCB OR Y6NCP WITH J1022NC5 DIE	---	---
	102	10	YAV10													
	----	1/4	YAV10T3	.47	.23	.34	.85	1.09	.05	.39	.31					
	106	5/16	YAV10T2	.53	.27		.86	1.13	.04							
	128	3/8	YAV10T4	.56	.28	.37	.89	1.17		.39						
AN-8	----	6	YAV8CL15	.41	.20	.28	.94	1.15	.07	.41	.38	MY29-11	MR4C, MR89Q, Y8MRB1, M8ND WITH N8CT DIE	Y6NCB OR Y6NCP WITH Y2CNC NEST AND J8CNC INDENTOR DIES	DV8L1 NEST Y29PL INDENTOR (1) CRIMP	UV8L NEST Y34PL INDENTOR (1) CRIMP
	140	8	YAV8CL14													
	----	10	YAV8CL22		.17	.25	.91	1.09								
	107		YAV8CL		.20	.28	.94	1.15								
	(1) ----	10-5MM	YAV8CL31			.25	.91	1.12								
	(1) 141	1/4	YAV8CL1	.46	.23	.32	.98	1.22	.07							
	(1) 108	5/16	YAV8CL2	.57	.28	.34	1.01	1.30	.05		.69					
	(1) 129	3/8	YAV8CL3													
	(1) ----		YAV8CL26		.31	.51	1.18	1.49								
	(1) ----	3/8-10MM	YAV8CL32		.28	.34	1.01	1.30								
	142	1/2	YAV8CL4	.73	.38	.48	1.14	1.52								
	----	5/8	YAV8CL39	.83	.50	.62	1.29	1.79	.04		.75					
	----	12	YAV8CL86	.41	.20	.26	.93	1.13	.07		.38					
	----	1/4	YAV8CL1B	.46	.23	.32	.99	1.22	.07		.38					
	----	1/4	YAV8CL1BOX500	.46				1.22								
	----	10	YAV8CLBOX500	.41	.20	.28	.94	1.15	.07							
AN-6	130	10	YAV6CL1	.48	.24	.29	1.06	1.31	.07	.47	.38	MY28 MY29-11	MR4C	Y6NCB OR Y6NCP WITH Y2CNC NEST AND J6CNC INDENTOR DIES	DV6L NEST Y29PL INDENTOR (1) CRIMP	UV6L NEST Y34PLA INDENTOR (1) CRIMP
	----		YAV6CL12	.50	.25	.34	1.11	1.37	.07							
	----	10-5MM	YAV6CL25	.48	.24	.29	1.06	1.31	.07							
	(1) 109	1/4	YAV6CL													
	(1) ----		YAV6CL21	.50	.25	.63	1.40	1.65	.07							
	(1) 131	5/16	YAV6CL4	.60	.30	.35	1.13	1.43	.06		.69					
	(1) 110	3/8	YAV6CL2													
	(1) ----		YAV6CL22			.48	1.26	1.56								
	(1) ----		YAV6CL23	.69	.44	.45	1.23	1.67	.05							
	----	3/8-10MM	YAV6CL26	.60	.30	.35	1.13	1.43	.06							
	143	1/2	YAV6CL10	.74	.38	.49	1.26	1.64								
	----	10	YAV6CL19BOX	.44	.24	.29	1.06	1.31	.69		.38					
	----	1/4	YAV6CLBOX500	.50				1.28								
AN-4	144	10	YAV4CL3	.55	.25	.28	1.11	1.37	.08	.47	.38	MY28 MY29-11	MR4C	---	DV4L NEST Y29PL INDENTOR (1) CRIMP	UV4L NEST Y34PLA INDENTOR (1) CRIMP
	----	10-5MM	YAV4CL21		.28			1.39								
	111	1/4	YAV4CL		.25			1.37								
	----		YAV4CL30		.28	.35	1.18	1.46								
	----		YAV4CL31			.28	1.11	1.39								
	132	5/16	YAV4CL4	.63	.31	.33	1.17	1.48	.07							
	112	3/8	YAV4CL2													
	(1) ----		YAV4CL17			.48	1.32	1.63								
	----	3/8-10MM	YAV4CL22			.33	1.17	1.48								
	145	1/2	YAV4CL5	.73	.38	.47	1.30	1.68	.06		.69					

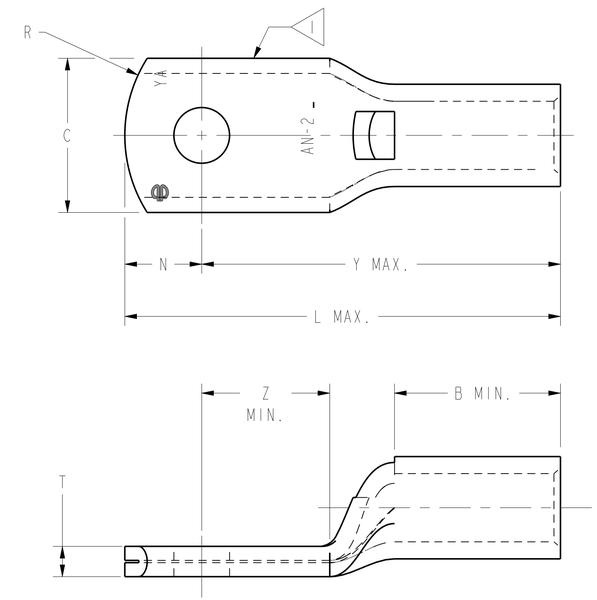

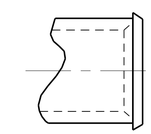

(5) BELLED VIEW

NOTES:

(1) DUE TO METHODS OF MANUFACTURING, SERRATIONS APPEAR ON TONGUE.

2. MATERIAL: COPPER TUBING

3. STANDARD FINISH: TIN PLATED
ALTERNATE PLATING OPTIONS: ADD SUFFIX TO DENOTE DIFFERENT PLATING REQUIREMENTS.
NK = NICKEL PLATING
W = HOT TIN DIP.
SV = MATTE SILVER PLATING
BR = BARE (UNPLATED)
LD = LEAD PLATING

4. ALL ITEMS ARE LISTED BY UNDERWRITERS LABS PER CONTROL NUMBER 670-B, FILE NUMBER E9498, WHITE CARD.

(5) ADD "B" SUFFIX FOR BELLED BARREL. BELLED VERSIONS OF THESE HYLUGS™ DONT'T CONFORM TO THE MS20659 DASH NO.

CAT.NO. YAV6C-L10B
SUPERSEDES: SA16635

TO ORDER BURNDY® PRODUCTS CALL

UNITED STATES
1-800-346-4175 (LONDONDERRY, NH)

CANADA:
1-800-361-6975 (QUEBEC)
1-800-387-6487 (ALL OTHER PROVINCES)

FOR PRODUCT INFO: http://www.burndy.com

HYLUG™

ITEM NO:	N/A
CAT. NO:	YAVL (SEE TABLE)
DRAWN BY:	ESK 02-02-73
CHECKER:	TB 06-01-77
DSN APPVL:	TB 06-01-77
MFG APPVL:	-- --
QA APPVL:	-- --
MKT APPVL:	-- --
PROD FAM:	PROD./SMALL COMPRE.
PROJECT #:	--
DOCUMENT TYPE:	Sales
REL LEVEL:	Released
SIZE	D
SCALE:	3:1
DRAWING NO	SD034764
REV	C
SHEET	1 OF 3

BURNDY

REV: PE0200

Downloaded from Arrow.com.