XCL211/XCL212 Series

ETR28006-003c

2.0A Inductor Built-in Step-Down “micro DC/DC” Converters

☆Green Operation Compatible

■GENERAL DESCRIPTION

The XCL211/XCL212series is a synchronous step-down micro DC/DC converter which integrates an inductor and a control IC in one tiny package (3.1mm×4.7mm, h=1.35mm).
An internal coil simplifies the circuit and enables minimization of noise and other operational trouble due to the circuit wiring.

A wide operating voltage range of 2.7V to 6.0V enables support for applications that require an externally set output voltage can be selected. The XCL211/XCL212 series uses synchronous rectification at an operating frequency of 2.4MHz. PWM control (XCL211) or automatic PWM/PFM switching control (XCL212) can be selected. The XCL211 series has a fixed frequency, enabling the suppression of output ripple. The XCL212 series achieves high efficiency while holding down output ripple across the full range of loads, from light to heavy, enabling the extension of battery operation time.

The series have a high speed soft-start as fast as 1ms for quick turn-on. With the built-in UVLO function, the internal P-channel driver transistor is forced OFF when input voltage becomes 2.4V or lower. It’s suitable for large-current application due to limit current is configured 4.0A. The integrated C_L discharge function which enables the electric charge at the output capacitor C_L to be discharged via the internal discharge switch located between the LX and GND pins. Due to C_L discharge function, malfunction on LX is prevented when Stand-by mode.

■APPLICATIONS

- ●Note PCs
- ●Printers
- ●Tablet PCs
- ●PND (Portable Navigation Device)

■FEATURES

Package Size	: 3.1mm×4.7mm, h=1.35mm
Input Voltage	: 2.7V ~ 6.0V
Output Voltage	: 0.9V ~ V_{IN} (FB Voltage=0.8V±2%)
Efficiency	: 94% (V_{IN}=5.0V, V_{OUT}=3.3V)
Output Current	: 2.0A
Oscillation Frequency	: 2.4MHz
Maximum Duty Cycle	: 100%
Control Methods	: PWM (XCL211) PWM/PFM (XCL212)
Functions	: Current Limit (Automatic return) Soft-Start C_L Discharge, UVLO
Output Capacitor	: Low ESR Ceramic Capacitor
Operating Ambient Temperature	: -40℃ ~ 85℃
Package	: USP-11B01
Environmental Friendly	: EU RoHS Compliant, Pb Free

■TYPICAL APPLICATION CIRCUIT

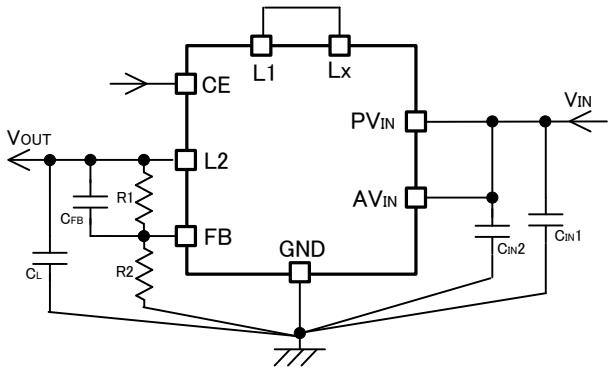

■ TYPICAL PERFORMANCE CHARACTERISTICS

XCL211B082DR /XCL212B082DR

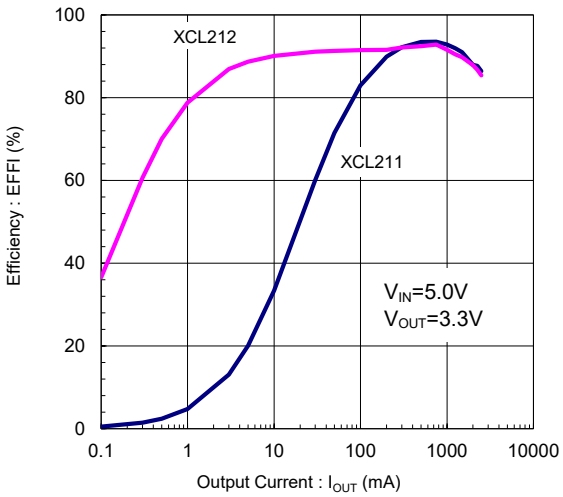

Downloaded from Arrow.com.

■BLOCK DIAGRAM

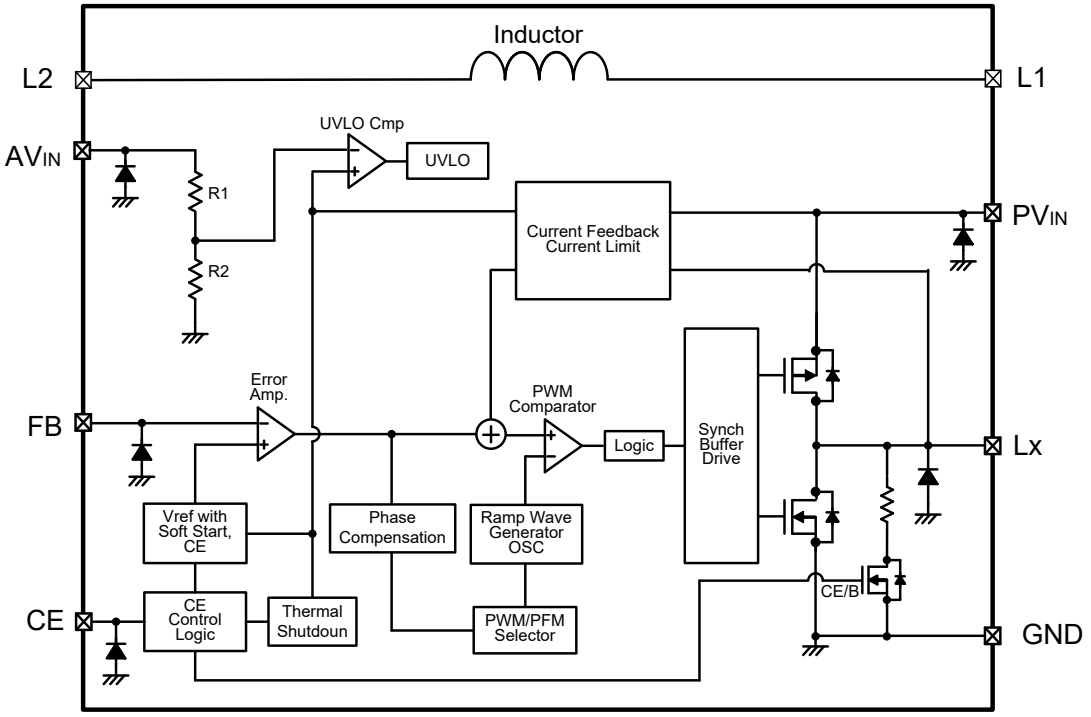

* The XCL211 offers a fixed PWM control, a Control Logic of PWM/PFM Selector is fixed at “PWM” internally.
The XCL212 control scheme is a fixed PWM/PFM automatic switching, a Control Logic of PWM/PFM Selector is fixed at “PWM/PFM automatic switching” internally.
Diodes inside the circuit are an ESD protection diode and a parasitic diode.

■PRODUCT CLASSIFICATION

● Ordering Information

XCL211①②③④⑤⑥ : Fixed PWM
XCL212①②③④⑤⑥ : PWM/PFM Auto Switching

DESIGNATOR	ITEM	SYMBOL	DESCRIPTION
①	Type	B	Refer to Selection Guide
②③	Reference Voltage	08	Reference Voltage is fixed at 0.8V
④	Oscillation Frequency	2	2.4MHz
⑤⑥ (*1)	Package (Order Unit)	DR	USP-11B01 (*2) (1,000pcs/Reel)

(*1) Halogen free and EU RoHS compliant.
(*2) The USP-11B01 reels are shipped in a moisture-proof packing.

● Selection Guide

TYPE	SOFT-START TIME	CHIP ENABLE	CURRENT LIMITER	THERMAL SHUTDOWN	UVLO	C_L AUTO-DISCHARGE
B	Fixed	Yes	Yes	Yes	Yes	Yes

Downloaded from Arrow.com.

■PIN CONFIGURATION

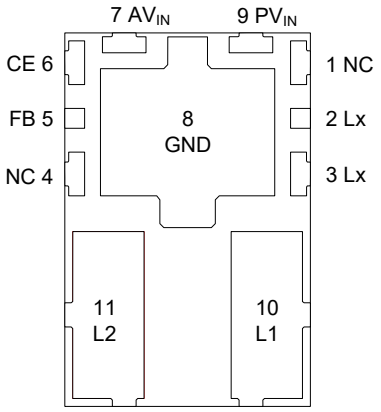

USP-11B01
(BOTTOM VIEW)

* Please connect the AV_{IN} pin (No.7) and the PV_{IN} pin (No.9) when operating.
* Please connect the L_X pins (No.2 and No.3).

■PIN ASSIGNMENT

PIN NUMBER	PIN NAME	FUNCTIONS
1	NC	No Connection
2	Lx	Switching Output
3	Lx	Switching Output
4	NC	No Connection
5	FB	Output Voltage Monitor
6	CE	Chip Enable
7	AV_{IN}	Analog Input
8	GND	Ground
9	PV_{IN}	Power Input
10	L1	Inductor Electrodes
11	L2	Inductor Electrodes

■CE PIN FUNCTION

PIN NAME	SIGNAL	STATUS
CE	Low	Stand-by
	High	Active

* Please do not leave the CE pin open.

■ABSOLUTE MAXIMUM RATINGS

Ta=25℃

PARAMETER		SYMBOL	RATINGS	UNIT
PVIN Pin Voltage		V_{PVIN}	-0.3 ~ 7.0 (*1)	V
AVIN Pin Voltage		V_{AVIN}		
CE Pin Voltage		V_{CE}	-0.3 ~ 7.0	V
FB Pin Voltage		V_{FB}	-0.3 ~ 7.0	V
Lx Pin Voltage		V_{Lx}	-0.3 ~ 7.0 or V_{PVIN} + 0.3 (*2)	V
Lx Pin Current		I_{Lx}	±6.0 (*3)	A
Power Dissipation	USP-11B01	Pd	1000 (40mm x 40mm Standard board) (*4)	mW
Operating Ambient Temperature		Topr	-40 ~ 85	℃
Storage Temperature		T_{stg}	-55 ~ 125	℃

All voltages are described based on the ground voltage of GND.

(*1) Please connect PV_{IN} pin (No.9) and AV_{IN} pin (No.7) for use.

(*2) The maximum value should be either 7.0V or V_{PVIN}+0.3V in the lowest.

(*3) It is measured when the two Lx pins (No.2 and 3) are tied up to each other.

(*4) The power dissipation figure shown above is based upon PCB mounted and it is for reference only.
Please refer to PACKAGING INFORMATION for the mounting condition.

Downloaded from Arrow.com.

■ ELECTRICAL CHARACTERISTICS

Ta=25℃

PARAMETER	SYMBOL	CONDITIONS	MIN.	TYP.	MAX.	UNIT	CIRCUIT
FB Voltage	V_{FB}	V_{IN}=5.0V, V_{CE}=5.0V Voltage to start oscillation while V_{FB}=0.72V → 0.88V	0.784	0.800	0.816	V	③
Operating Voltage Range	V_{IN}	When connected to external components	2.7	-	6.0	V	①
Maximum Output Current	I_{OUTMAX}	V_{IN}=V_{CE}=5.0V (*1,*2) When connected to external components	2.0	-	-	A	①
UVLO Voltage	V_{UVLO}	V_{CE}=5.0V, V_{FB}=0.72V Voltage which Lx pin holding "L" level (*3)	2.00	-	2.68	V	③
Quiescent Current	Iq	V_{IN}=V_{CE}=5.0V, V_{FB}=0.88V	-	53	92	μA	②
Stand-by Current	I_{STB}	V_{IN}=5.0V, V_{CE}=0V, V_{FB}=0.88V	-	0.01	1.00	μA	②
Oscillation Frequency	f_{OSC}	V_{IN}=V_{CE}=5.0V, I_{OUT}=300mA When connected to external components	2040	2400	2760	kHz	①
PFM Switch Current (*4)	I_{PFM}	V_{IN}=V_{CE}=6.0V, I_{OUT}=1mA When connected to external components	-	680	-	mA	①
PFM Duty Limit (*4)	DTY_{LIMIT_PFM}	V_{IN}=V_{CE}=2.7V, I_{OUT}=1mA When connected to external components	-	180	250	%	①
Maximum Duty Cycle	D_{MAX}	V_{IN}=V_{CE}=5.0V, V_{FB}=0.72V	100	-	-	%	③
Minimum Duty Cycle	D_{MIN}	V_{IN}=V_{CE}=5.0V, V_{FB}=0.88V	-	-	0	%	③
LX SW "H" ON Resistance	R_{LXH}	V_{IN}=V_{CE}=4.0V, V_{FB}=0.72V (*5)	-	0.11	0.21	Ω	④
LX SW "L" ON Resistance	R_{LXL}		-	0.12	0.30 (*6)	Ω	–
LXSW"H" Leakage Current	I_{LeakH}	V_{IN}=5.0V, V_{CE}=0V, V_{FB}=0.88V, V_{Lx}=0V	-	0.01	1.00 (*7)	μA	⑤
Current Limit	I_{LIM}	V_{IN}=V_{CE}=5.0V, V_{FB}=0.72V (*8)	-	4.0	-	A	④
Output Voltage Temperature Characteristics	ΔV_{OUT}/ (Δtopr・V_{OUT})	I_{OUT}=100mA -40℃≦Topr≦85℃ When connected to external components	-	±100	-	ppm/℃	①
CE "H" Voltage	V_{CEH}	V_{IN}=5.0V, V_{FB}=0.72V Applied voltage to V_{CE} Voltage changes Lx to "H" level	1.2	-	V_{IN}	V	③
CE "L" Voltage	V_{CEL}	V_{IN}=5.0V, V_{FB}=0.72V Applied voltage to V_{CE} Voltage changes Lx to "L" level	GND	-	0.4	V	③
CE "H" Current	I_{CEH}	V_{IN}=5.0V, V_{CE}=5.0V, V_{FB}=0V	-0.1	-	0.1	μA	⑤
CE "L" Current	I_{CEL}	V_{IN}=5.0V, V_{CE}=0V, V_{FB}=0V	-0.1	-	0.1	μA	⑤
FB "H" Current	I_{FBH}	V_{IN}=5.0V, V_{CE} =0V, V_{FB}=5.0V	-0.1	-	0.1	μA	⑤
FB "L" Current	I_{FBL}	V_{IN}=5.0V, V_{CE}=0V, V_{FB}=0V	-0.1	-	0.1	μA	⑤
Soft-Start Time	t_{SS}	V_{IN}=5.0V, V_{CE}=0V → 5.0V, I_{OUT}=1mA When connected to external components	0.3	1.0	2.0	ms	①
Thermal Shutdown Temperature	T_{TSD}		-	150	-	℃	–
Hysteresis Width	T_{HYS}		-	20	-	℃	–
C_L Discharge Resistance	R_{DCHG}	V_{IN}=5.0V, V_{CE}=0V, V_{FB}=0.72V, V_{Lx}=1.0V	80	130	160	Ω	⑥
Inductance	L	Test Freq.=1.0MHz	-	1.5	-	μH	–
Inductor Rated Current	I_{DC}	ΔT=+40℃	-	2.3	-	A	–

External Components: C_{IN1}=20μF(ceramic), C_{IN2}=1μF(ceramic), C_L=20μF(ceramic), R1=15kΩ, R2=30kΩ, C_{FB}=1000pF
Condition: Unless otherwise stated,"H"= V_{IN} ~ V_{IN} - 1.2V, "L"= + 0.1V ~ -0.1V

(*1) Mount conditions affect heat dissipation. Maximum output current is not guaranteed when T_{TSD} starts to operate earlier.
(*2) When the difference between the input and the output is small, some cycles may be skipped completely before current maximizes. If current is further pulled from this state, output voltage will decrease because of P-ch driver ON resistance.
(*3) These values include UVLO detect voltage, UVLO release voltage and hysteresis operating voltage range. UVLO release voltage is defined as the V_{IN} voltage which makes Lx pin "H".
(*4) XCL211 series exclude I_{PFM} and DTY_{LIMIT_PFM} because those are only for the PFM control's functions.
(*5) On resistance = (V_{IN} – Lx pin measurement voltage) / 0.1A
(*6) Design value
(*7) When temperature is high, a current of approximately 20μA (maximum) may leak.
(*8) Current limit denotes the level of detection at peak of coil current.

Downloaded from Arrow.com.

■TEST CIRCUITS

< Circuit No.① >

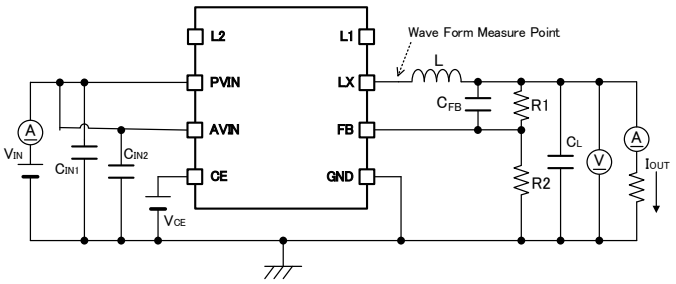

※External Components
C_{IN1} : 20μF(ceramic)
C_{IN2} : 1μF(ceramic)
C_L : 20μF(ceramic)
R1 : 15kΩ
R2 : 30kΩ
C_{FB} : 1000pF(ceramic)
L : 1.5μH(Selected goods)

< Circuit No.② >

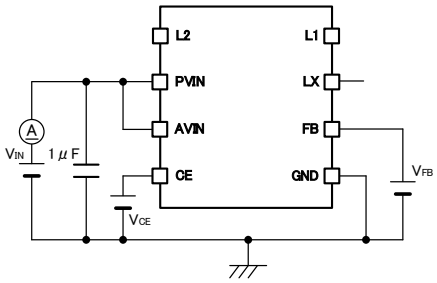

< Circuit No.③ >

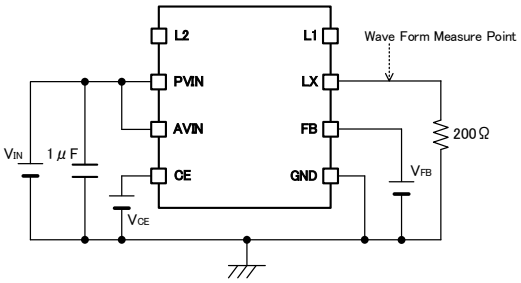

< Circuit No.④ >

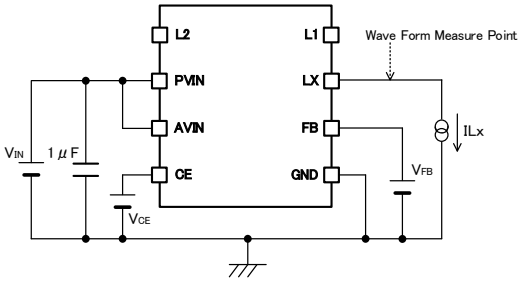

< Circuit No.⑤ >

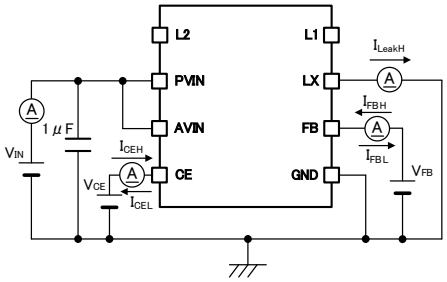

< Circuit No.⑥ >

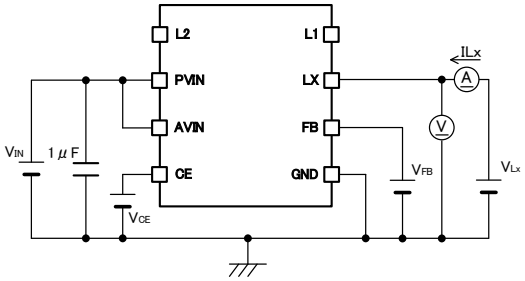

Downloaded from Arrow.com.

■TYPICAL APPLICATION CIRCUIT

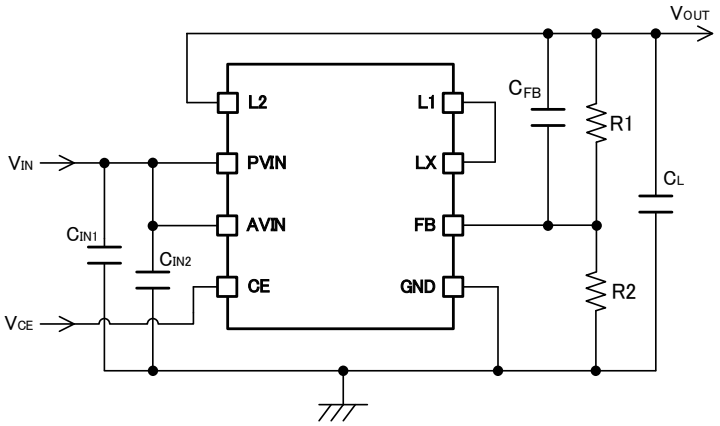

NOTE:
The integrated Inductor can be used only for this DC/DC converter. Please do not use this inductor for other reasons.

【External Components】

	VALUE	PRODUCT NUMBER
C_{IN1} C_L	10V/10μF	MSASL168BB5106KTNB33(TaiyoYuden)
		MSASL21GAB7106MTNA01(TaiyoYuden)
		C2012X7R1A106K125AC (TDK)
	10V/22μF	MSASL21GBB5226MTNA01(TaiyoYuden)
		C2012X5R1A226M125AB(TDK)
C_{IN2}	16V/1μF	MSASE105SB5105KFNA01(TaiyoYuden)
		MSASE168SB7105KTNA01(TaiyoYuden)
		C1005X5R1E105K050BC(TDK)
		C1608X7R1C105K080AC (TDK)

NOTE:
The minimum value of the C_{IN1} should be 10μF, and it is optimum to set a capacitance value depends on the input impedance.

<Output Voltage Setting>
Output voltage can be set by adding external split resistors. Output voltage is determined by the following equation, based on the values of RFB1 and RFB2. The sum of RFB1 and RFB2 should normally be 100kΩ or less. Output voltage range is 0.9V~5.5V by a 0.8V (±2.0%) reference voltage. When input voltage (V_{IN}) ≦setting output voltage, output voltage (V_{OUT}) can not output the power more than input voltage (V_{IN}).

$$V_{OUT} = 0.8 \times (R1 + R2) / R2$$

The value of C_{FB}, speed-up capacitor for phase compensation, should be $f_{ZFB} = 1 / (2 \times \pi \times CFB \times RFB1)$ which is equal to 20kHz. Adjustments are required from 1kHz to 10kHz depending on the application, value of inductance (L), and value of load capacitance (C_L).

[Example of calculation]
When R_{FB1}=47kΩ, R_{FB2}=15kΩ, $V_{OUT}=0.8\times(47k\Omega+15k\Omega) / 15k\Omega = 3.3V$
When C_{FB}=330pF, $fzfb= 1/(2 \times \pi \times 330pF \times 47\ k\Omega) = 10.26kHz$

V_{OUT} (V)	R_{FB1} (kΩ)	R_{FB2} (kΩ)	C_{FB} (pF)	V_{OUT} (V)	R_{FB1} (kΩ)	R_{FB2} (kΩ)	C_{FB} (pF)
1.0	7.5	30	2000	2.5	51	24	300
1.2	15	30	1000	3.0	33	12	470
1.5	26	30	560	3.3	47	15	330
1.8	30	24	510	5.0	43	8.2	390

Downloaded from Arrow.com.

■ OPERATIONAL DESCRIPTION

The XCL211/XCL212 series consists of a reference voltage source, ramp wave circuit, error amplifier, PWM comparator, phase compensation circuit, output voltage adjustment resistors, P-channel MOS driver transistor, N-channel MOS switching transistor for the synchronous switch, current limiter circuit, UVLO circuit and others. (See the BLOCK DIAGRAM below) The series ICs compare, using the error amplifier, the voltage of the internal voltage reference source with the feedback voltage from the FB pin. Phase compensation is performed on the resulting error amplifier output, to input a signal to the PWM comparator to determine the turn-on time during PWM operation. The PWM comparator compares, in terms of voltage level, the signal from the error amplifier with the ramp wave from the ramp wave circuit and delivers the resulting output to the buffer driver circuit to cause the Lx pin to output a switching duty cycle. This process is continuously performed to ensure stable output voltage.

The current feedback circuit monitors the P-channel MOS driver transistor current for each switching operation and modulates the error amplifier output signal to provide multiple feedback signals. This enables a stable feedback loop even when a low ESR capacitor such as a ceramic capacitor is used ensuring stable output voltage.

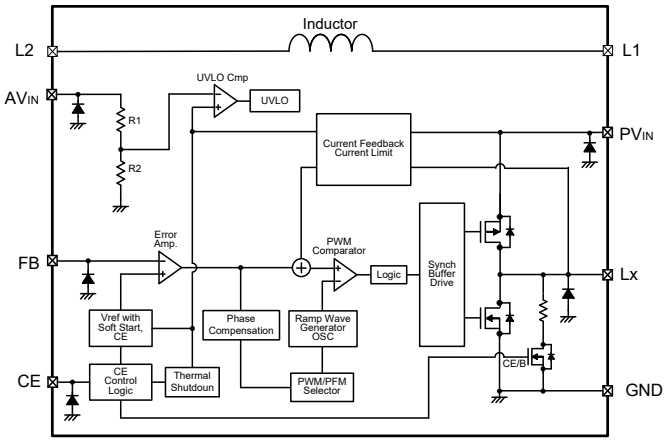

<BLOCK DIAGRAM>

<Reference Voltage Source>

The reference voltage source provides the reference voltage to ensure stable output voltage of the DC/DC converter.

<Ramp Wave Circuit>

The ramp wave circuit determines switching frequency. The frequency is fixed internally and can be selected from 1.2MHz or 2.4MHz. Clock pulses generated in this circuit are used to produce ramp waveforms needed for PWM operation, and to synchronize all the internal circuits.

<Error Amplifier>

The error amplifier is designed to monitor output voltage. The amplifier compares the reference voltage with the feedback voltage divided by the external split resistors, R1 and R2. When a voltage lower than the reference voltage is fed back, the output voltage of the error amplifier increases. The gain and frequency characteristics of the error amplifier output are fixed internally to deliver an optimized signal to the mixer.

<Current Limit>

The XCL211/XCL212 series includes a fold-back circuit, which aids the operation of the current limiter and circuit protection. The XCL211/XCL212 series monitors the current flowing through the P-channel MOS driver transistor

①When current flowing through P-channel MOS driver transistor reaches current limit I_{LIM}, the current limiter circuit operates to limit the inductor current I_{LX}. If this state continues, the fold-back circuit operates and limit the output current in order to protect the IC from damage.

②The output voltage is automatically resumed if the load goes light. When it is resumed, the soft-start function operates.

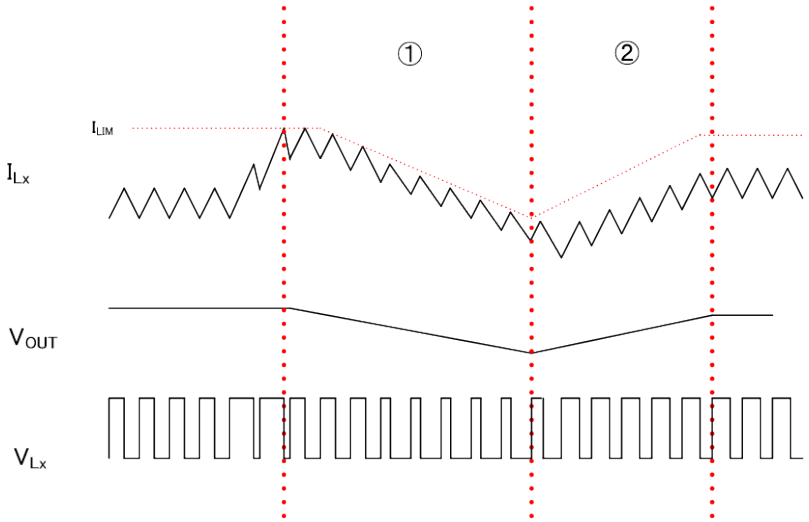

Downloaded from Arrow.com.

■OPERATIONAL DESCRIPTION (Continued)

<Thermal Shutdown>

For protection against heat damage, the thermal shutdown function monitors chip temperature. When the chip's temperature reaches 150°C (TYP.), the thermal shutdown circuit starts operating and the P-channel driver transistor will be turned off. At the same time, the output voltage decreases. When the temperature drops to 130°C (TYP.) after shutting off the current flow, the IC performs the soft start function to initiate output startup operation.

< Function of CE pin >

The XCL211/XCL212 series will enter into stand-by mode by inputting a low level signal to the CE pin. During a stand-by mode, the current consumption of the IC becomes 0μA (TYP.). The IC starts its operation by inputting a high level signal to the CE pin. The input of the CE pin is a CMOS input and the sink current is 0μA (TYP.).

<UVLO>

When the VIN pin voltage becomes 2.4V (TYP.) or lower, the P-channel MOS driver transistor output driver transistor is forced OFF to prevent false pulse output caused by unstable operation of the internal circuitry. When the V_{IN} pin voltage becomes 2.68V (MAX.) or higher, switching operation takes place. By releasing the UVLO function, the IC performs the soft start function to initiate output startup operation. The soft start function operates even when the VIN pin voltage falls momentarily below the UVLO operating voltage. The UVLO circuit does not cause a complete shutdown of the IC, but causes pulse output to be suspended; therefore, the internal circuitry remains in operation.

<Soft Start>

The XCL211/XCL212 series provide 1.0ms (TYP). Soft start time is defined as the time interval to reach 90% of the output voltage from the time when the V_{CE} is turned on.

<C_L High Speed Discharge>

The XCL211/XCL212 series can quickly discharge the electric charge at the output capacitor (C_L) when a low signal to the CE pin which enables a whole IC circuit put into OFF state, is inputted via the N-channel MOS switch transistor located between the L_X pin and the V_{GND} pin. When the IC is disabled, electric charge at the output capacitor (C_L) is quickly discharged so that it may avoid application malfunction. Discharge time of the output capacitor (C_L) is set by the C_L auto-discharge resistance (R) and the output capacitor (C_L). By setting time constant of a C_L auto-discharge resistance value [R] and an output capacitor value (C_L) as τ (τ =C x R), discharge time of the output voltage after discharge via the N-channel transistor is calculated by the following formulas.

$$V = V_{OUT(E)} \times e^{-t/\tau} \quad or \quad t = \tau \ln (V_{OUT(E)} / V)$$

V : Output voltage after discharge
$V_{OUT(E)}$: Output voltage
t: Discharge time
τ : $C_L \times R_{DCHG}$
C_L : Capacitance of Output capacitor
R_{DCHG} : C_L auto-discharge resistance

R_{DCHG} = 130Ω(TYP.) C_L=20μF

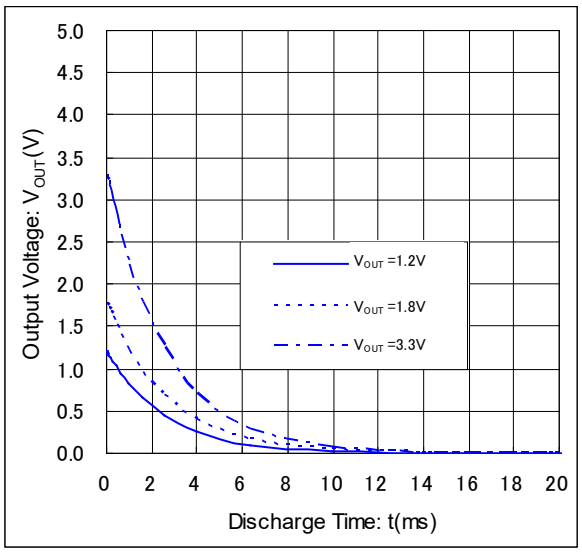

Downloaded from Arrow.com.

■OPERATIONAL DESCRIPTION (Continued)

<PFM Switch Current> (*1)

In PFM control operation, until coil current reaches to a specified level (IPFM), the IC keeps the P-channel MOS driver transistor on. In this case, time that the P-channel MOS driver transistor is kept on (t_{ON}) can be given by the following formula. Please refer to I_{PFM}①

$$t_{ON} = L \times I_{PFM} / (V_{IN} - V_{OUT})$$

<PFM Duty Limit> (*1)

In PFM control operation, the PFM duty limit (DTY_{LIMIT_PFM}) is set to 200% (TYP.). Therefore, under the condition that the duty increases (e.g. the condition that the step-down ratio is small), it's possible for P-channel MOS driver transistor to be turned off even when coil current doesn't reach to IPFM. Please refer to I_{PFM}②

(*1) XCL211 Series is excluded.

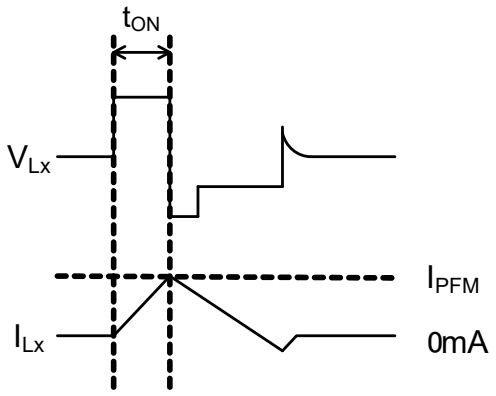

Fig. I_{PFM}①

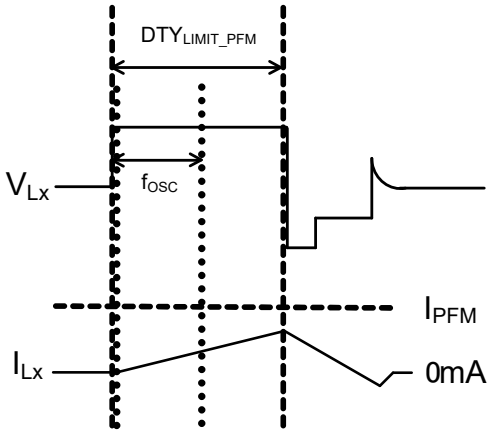

Fig. I_{PFM}②

Downloaded from Arrow.com.

■NOTE ON USE

1. Please use this IC within the stated maximum ratings. For temporary, transitional voltage drop or voltage rising phenomenon, the IC is liable to malfunction should the ratings be exceeded.

2. Where wiring impedance is high, operations may become unstable due to noise and/or phase lag depending on output current. Please wire the input capacitor (C_{IN}) and the output capacitor (C_L) as close to the IC as possible.

3. When the difference between V_{IN} and V_{OUT} is large in PWM control, very narrow pulses will be outputted, and there is the possibility that some cycles may be skipped completely.

4. When the difference between V_{IN} and V_{OUT} is small, and the load current is heavy, very wide pulses will be outputted and there is the possibility that some cycles may be skipped completely.

5. With the IC, the peak current of the coil is controlled by the current limit circuit. Since the peak current increases when dropout voltage or load current is high, current limit starts operation, and this can lead to instability. When peak current becomes high, please adjust the coil inductance value and fully check the circuit operation. In addition, please calculate the peak current according to the following formula:

$$Ipk = (V_{IN}-V_{OUT})\times OnDuty / (2\times L\times f_{OSC}) + I_{OUT}$$

L : Coil Inductance Value
f_{OSC}: Oscillation Frequency

6. Use of the IC at voltages below the recommended voltage range may lead to instability.

7. This IC should be used within the stated absolute maximum ratings in order to prevent damage to the device.

8. When the IC is used in high temperature, output voltage may increase up to input voltage level at no load because of the leak current of the P-channel driver transistor.

9. The XCL211/XCL212 uses fold-back circuit limiter. However, fold-back may become “droop” affected by the wiring conditions. Care must be taken especially for C_{IN} distance and position.

10. If C_L capacitance reduction happens such as in the case of low temperature, the IC may enter unstable operation. Care must be taken for C_L capacitor selection and its capacitance value.

1ch V_{Lx} : 2.0V/div

2ch V_{OUT} : 50mV/div

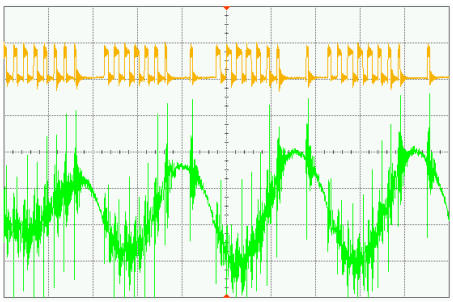

Ta = - 50℃
V_{IN} = 3.6V, V_{OUT} = 0.9V, f_{OSC} = 2.4MHz
C_{IN} = 20μF(Ceramic)
C_L = 14.7μF(Ceramic)
I_{OUT} = 300mA

x-axis : 2.0μs / div

11. Torex places an importance on improving our products and its reliability.
However, by any possibility, we would request user fail-safe design and post-aging treatment on system or equipment.

Downloaded from Arrow.com.

■NOTE ON USE (Continued)

12) Instructions of pattern layouts

(1) In order to stabilize V_{IN} voltage level, we recommend that that a by-pass capacitor (C_{IN}) be connected as close as possible to PV_{IN} pin, AV_{IN} pin and GND pins.

(2) Make sure to avoid noise from the PV_{IN} pin to the AV_{IN} pin.

(3) Please mount each external component as close to the IC as possible.

(4) Wire external components as close to the IC as possible and use thick, short connecting traces to reduce the circuit impedance.

(5) Make sure that the PCB GND traces are as thick as possible, as variations in ground potential caused by high ground currents at the time of switching may result in instability of the IC.

(6) This series' internal driver transistors bring on heat because of the output current and ON resistance of P-channel and N-channel MOS driver transistors.

<Reference Pattern Layout>

<1st>

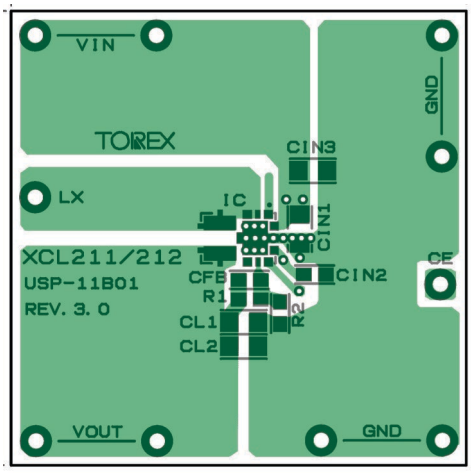

<2nd>

<3rd>

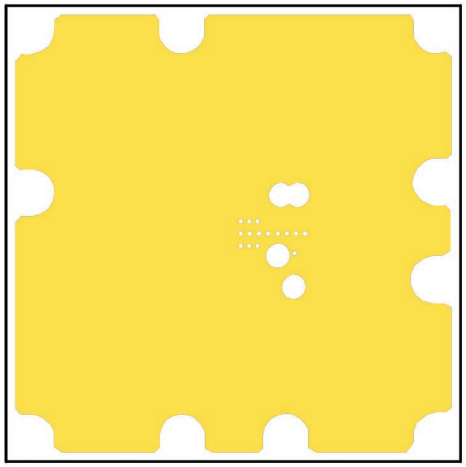

<4th>

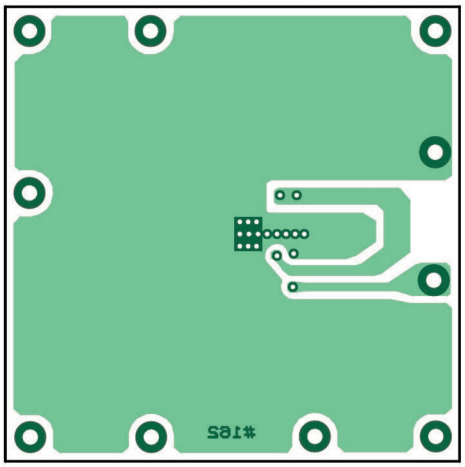

Downloaded from Arrow.com.

■TYPICAL PERFORMANCE CHARACTERISTICS

(1) Output Voltage vs. Output Current

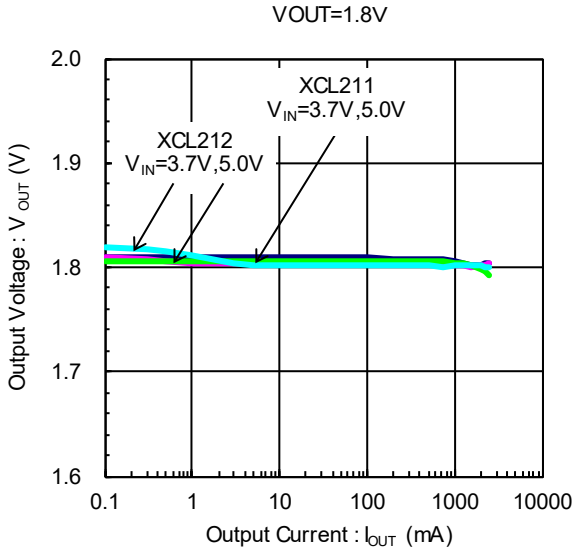

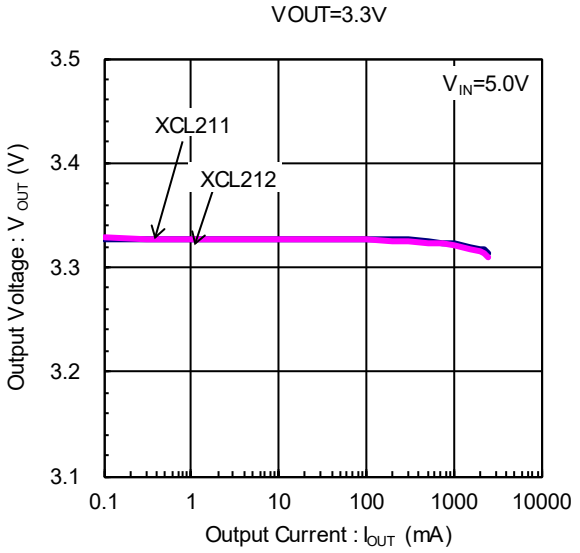

(2) Efficiency vs. Output Current

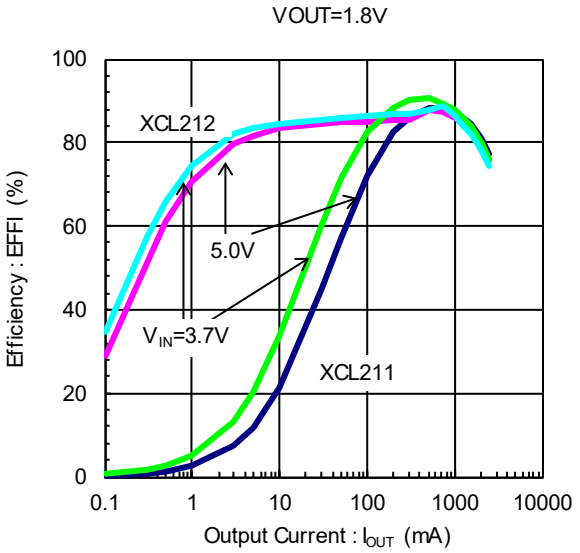

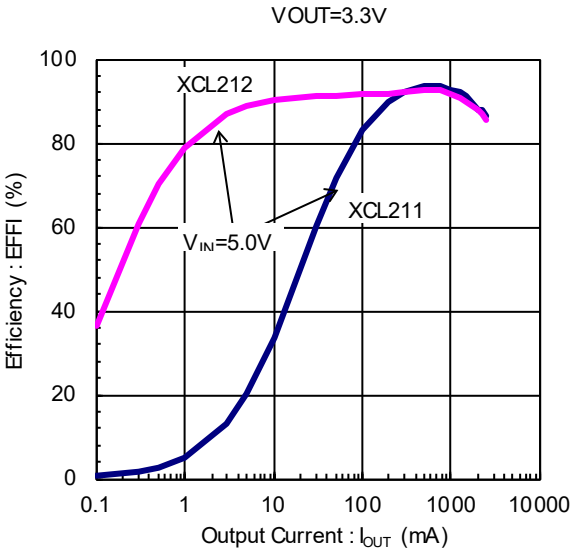

(3) Ripple Voltage vs. Output Current

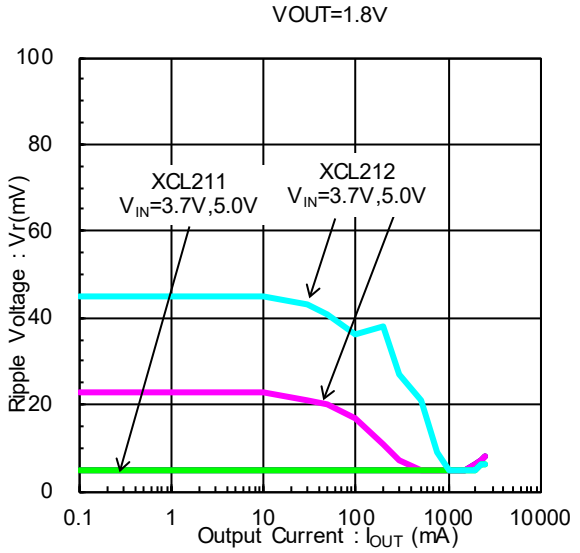

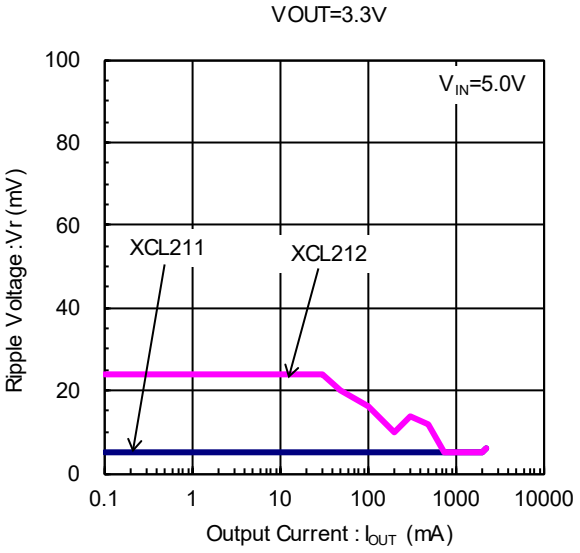

Downloaded from Arrow.com.

■TYPICAL PERFORMANCE CHARACTERISTICS (Continued)

(4) Output Voltage vs. Ambient Temperature

VOUT=1.8V

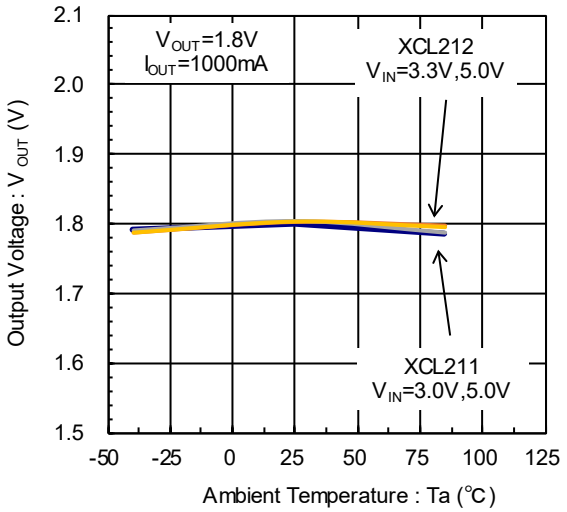

VOUT=3.3V

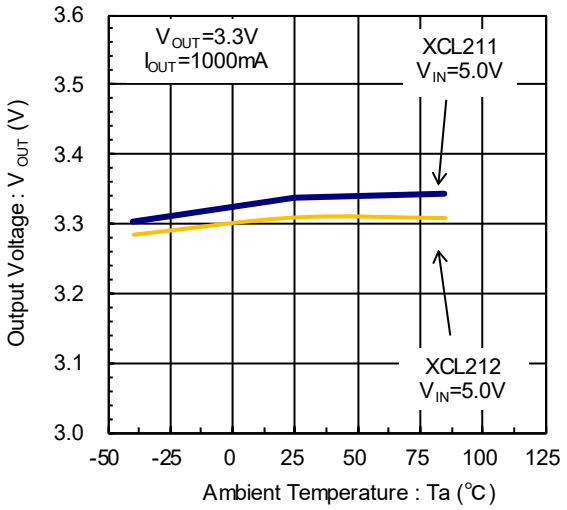

(5) Oscillation Frequency vs. Ambient Temperature

XCL211B082DR VOUT=1.8V

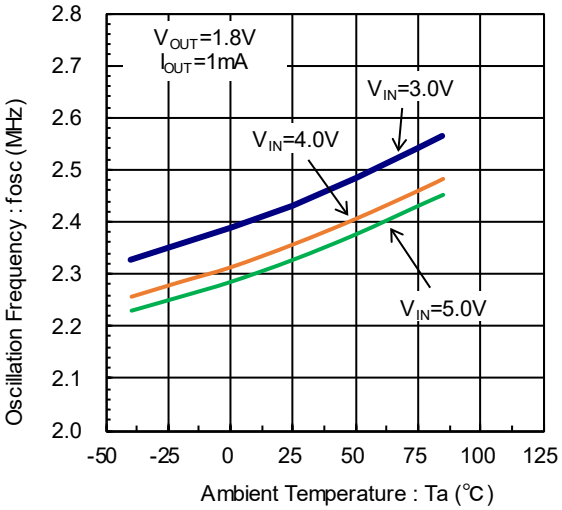

XCL211B082DR VOUT=3.3V

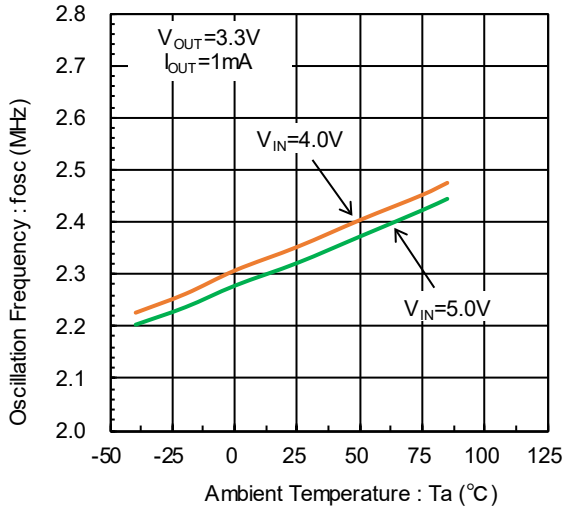

(6) Load Transient Response

XCL211B082DR Vout=1.8V

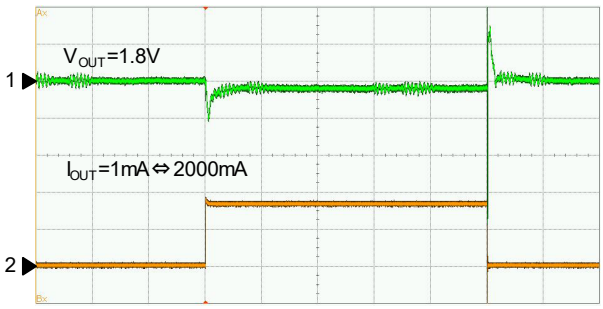

1ch:100mV/div, 2ch:I_{OUT} SW 2.0V/div, H:100us/div

XCL212B082DR Vout=1.8V

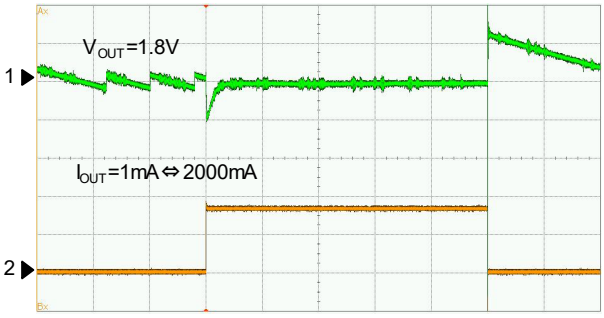

1ch:100mV/div, 2ch:I_{OUT} SW 2.0V/div, H:100us/div

Downloaded from Arrow.com.

■PACKAGING INFORMATION

For the latest package information go to, www.torexsemi.com/technical-support/packages

PACKAGE	OUTLINE / LAND PATTERN	THERMAL CHARACTERISTICS
USP-11B01	USP-11B01 PKG	USP-11B01 Power Dissipation

Downloaded from Arrow.com.

■MARKING RULE

●USP-11B01

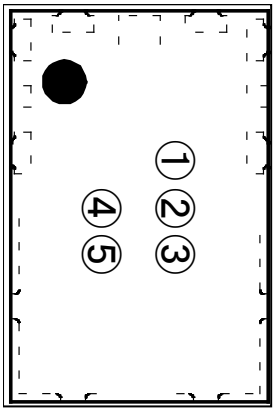

① represents product series

MARK	PRODUCT SERIES
C	XCL211******
D	XCL212******

② represents integer of the reference voltage

MARK	REFERENCE VOLTAGE (V)	PRODUCT SERIES
A	0.8 (fix)	XCL21**08***

③ represents oscillation frequency

MARK	OSCILLATION FREQUENCY (MHz)	PRODUCT SERIES
2	2.4	XCL21****2**

④⑤ represents production lot number
01 to 09, 0A to 0Z, 11 to 9Z, A1 to A9, AA to AZ, B1 to ZZ repeated
(G, I, J, O, Q, W excluded)
*No character inversion used.

Downloaded from Arrow.com.

1. The product and product specifications contained herein are subject to change without notice to improve performance characteristics. Consult us, or our representatives before use, to confirm that the information in this datasheet is up to date.

2. The information in this datasheet is intended to illustrate the operation and characteristics of our products. We neither make warranties or representations with respect to the accuracy or completeness of the information contained in this datasheet nor grant any license to any intellectual property rights of ours or any third party concerning with the information in this datasheet.

3. Applicable export control laws and regulations should be complied and the procedures required by such laws and regulations should also be followed, when the product or any information contained in this datasheet is exported.

4. The product is neither intended nor warranted for use in equipment of systems which require extremely high levels of quality and/or reliability and/or a malfunction or failure which may cause loss of human life, bodily injury, serious property damage including but not limited to devices or equipment used in 1) nuclear facilities, 2) aerospace industry, 3) medical facilities, 4) automobile industry and other transportation industry and 5) safety devices and safety equipment to control combustions and explosions. Do not use the product for the above use unless agreed by us in writing in advance.

5. Although we make continuous efforts to improve the quality and reliability of our products; nevertheless Semiconductors are likely to fail with a certain probability. So in order to prevent personal injury and/or property damage resulting from such failure, customers are required to incorporate adequate safety measures in their designs, such as system fail safes, redundancy and fire prevention features.

6. Our products are not designed to be Radiation-resistant.

7. Please use the product listed in this datasheet within the specified ranges.

8. We assume no responsibility for damage or loss due to abnormal use.

9. All rights reserved. No part of this datasheet may be copied or reproduced unless agreed by Torex Semiconductor Ltd in writing in advance.

TOREX SEMICONDUCTOR LTD.

Downloaded from Arrow.com.