THIS DRAWING IS UNPUBLISHED. RELEASED FOR PUBLICATION 20
© COPYRIGHT 20 BY - ALL RIGHTS RESERVED.

REVISIONS					
P	LTR	DESCRIPTION	DATE	DWN	APVD
	A15	REVISED PER ECO-11-002569	25FEB2011	DLD	DCM
	A16	REVISED PER ECO-14-011102	22JUL2014	DLD	DCM
	A17	REVISED PER ECO-20-012415	10SEP2020	AP	CM

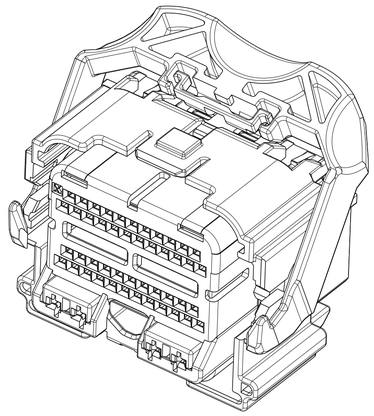

PART NUMBER:
1438691-1
SHOWN WITH SPACER
IN SEATED POSITION
SCALE 2:1

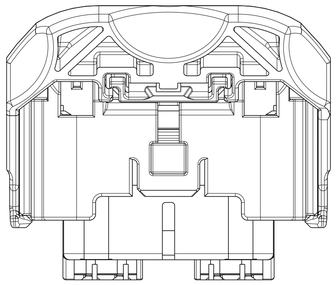

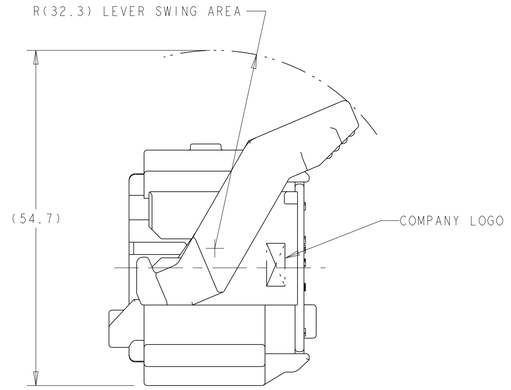

SHOWN WITH SPACER IN SEATED POSITION

1. PRINT TE PART NUMBER AND TRACEBILITY (YY : 2 DIGIT YEAR, JJJ = JULIAN DATE, HH = 2 DIGIT MILITARY HOUR CODE) IN THE LOCATION AT ASSEMBLY.
2. OPTIONAL WIRE SHIELD PART NUMBERS (SOLD SEPARATELY) 1438126, 1438180, 1488373, AND 1488572. CONTACT TE ENGINEERING FOR MINIMUM FEED THRU CONDITION.
3. APPLICABLE TERMINAL PART NUMBERS (SOLD SEPARATELY)
   FOR TIN APPLICATIONS: 1393367 AND 1393366.
   FOR GOLD APPLICATIONS: 1393365 AND 1393364
   FOR TERMINATION AND REELING OPTIONS SEE DRAWINGS 1393367, 1393366, 1393365, AND 1393364.
4. APPLICABLE MOLEX (1.5) POWER TERMINAL PART NUMBERS:
   33012-0002 TIN 0.50-1.50mm^2
5. CAM LEVER AND SPACER ARE SHIPPED IN THEIR PRE-ASSEMBLED POSITIONS.
6. REFERENCE TE INSTRUCTION SHEET 408-8893.
7. OBSOLETE PART

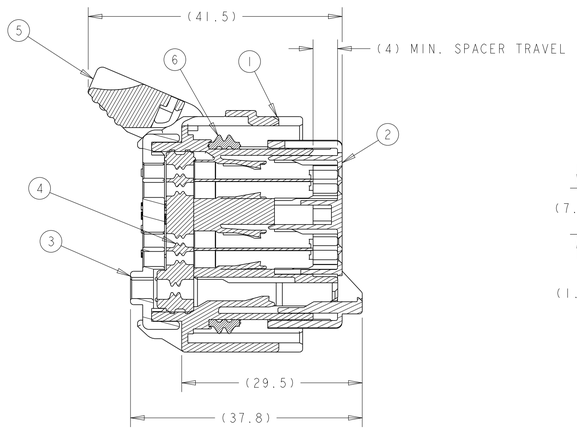

SECTION A-A
SPACER AND LEVER IN
PRE-SEATED POSITION
(DELIVERY CONDITION)

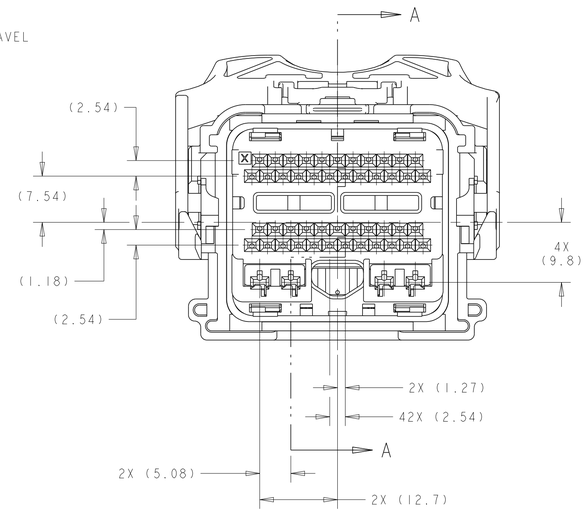

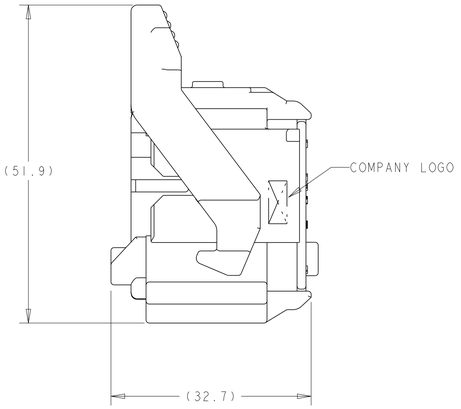

SHOWN WITH CAM
LEVER AND SPACER
IN LOADED POSITION

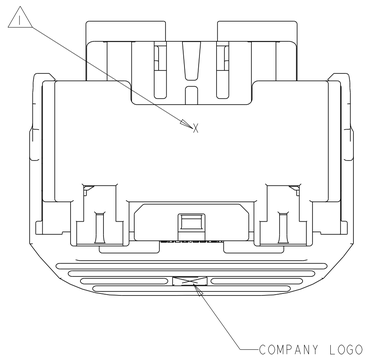

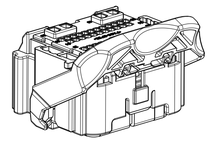

SCALE 1:1

PART COLOR	DESCRIPTION	ITEM NO.
GREEN	PERIMETER SEAL	6
GRAY	LEVER	5
BROWN	GROMMET SEAL	4
BLACK	COVER	3
RED	SPACER	2
BLACK	HARNESS, KEY "A"	1

THIS DRAWING IS A CONTROLLED DOCUMENT.

DIMENSIONS: mm

TOLERANCES UNLESS OTHERWISE SPECIFIED:
0 PLC ±-
1 PLC ±0.3
2 PLC ±0.10
3 PLC ±-
4 PLC ±-
ANGLES ±1°

MATERIAL -
FINISH -

DWN B. CRISAMORE 21JUL2004
CHK M. HITCHCOCK 21JUL2004
APVD C. MARTIN 21JUL2004
PRODUCT SPEC -
APPLICATION SPEC -
WEIGHT -

TE Connectivity

NAME ASSEMBLY, 50-WAY, KEY A, PCM HARNESS

SIZE	CAGE CODE	DRAWING NO	RESTRICTED TO
A1	00779	C-1438691	-

Customer Drawing | SCALE 2:1 | SHEET 1 OF 4 | REV A17

4805 (3/13)

Downloaded from Arrow.com.

THIS DRAWING IS UNPUBLISHED. RELEASED FOR PUBLICATION 20
© COPYRIGHT 20 BY - ALL RIGHTS RESERVED.

APPLICABLE HEADER INTERFACE SPECIFICATION

SHOWN WITHOUT KEYING OPTIONS

REVISIONS					
P	LTR	DESCRIPTION	DATE	DWN	APVD
	-	SEE SHEET 1	-	-	-

NOTES: UNLESS OTHERWISE SPECIFIED

1. GENERAL TOLERANCE:
   ±0.3 ALL ONE PLACE DIMENSIONS
   ±0.10 ALL TWO PLACE DIMENSIONS
   ±1°00′ ALL ANGULAR DIMENSIONS
2. DRAFT ANGLE PERMISSIBLE ONLY WITHIN DRAWING TOLERANCE.
3. SEALING SURFACE, NO WITNESS LINES OR DAMAGE PERMITTED.
4. ALL UNMARKED RADII TO BE 0.5 MAX., UNLESS OTHERWISE SPECIFIED.
5. VENT HOLE SIZE AND LOCATION IS OPTIONAL.
6. THIS AREA TO REMAIN CLEAR FOR THE HARNESS ASSEMBLY.
7. TERMINAL POSITION IDENTIFICATION.

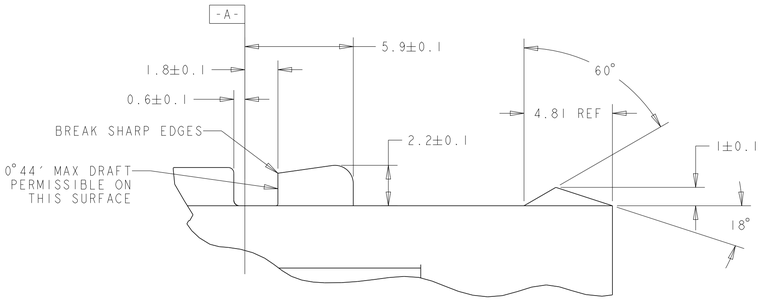

DETAIL F
SCALE 6:1

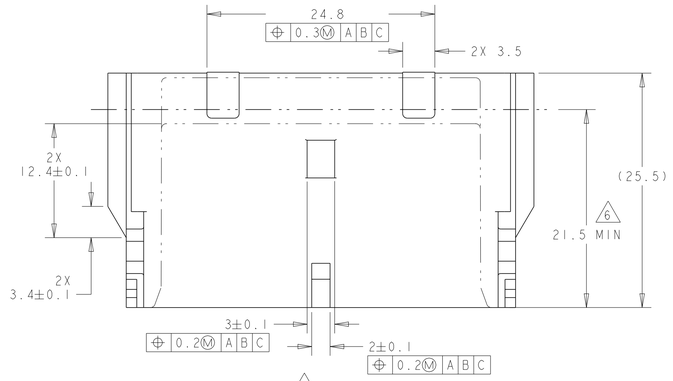

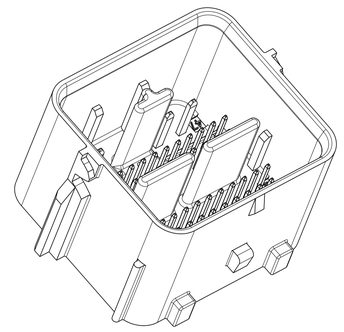

SCALE 2:1

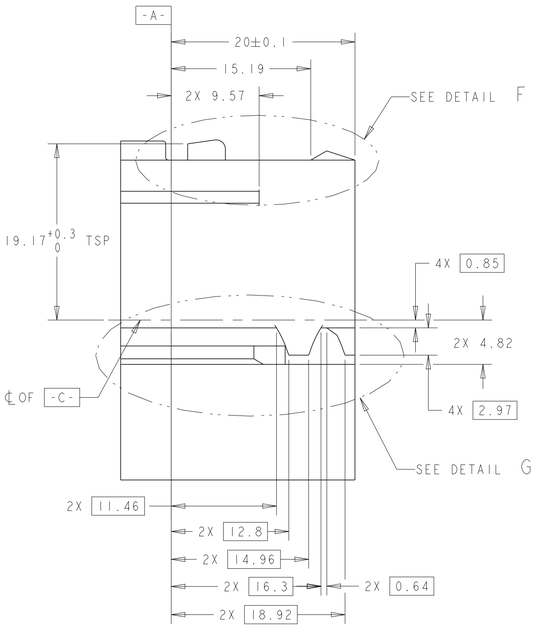

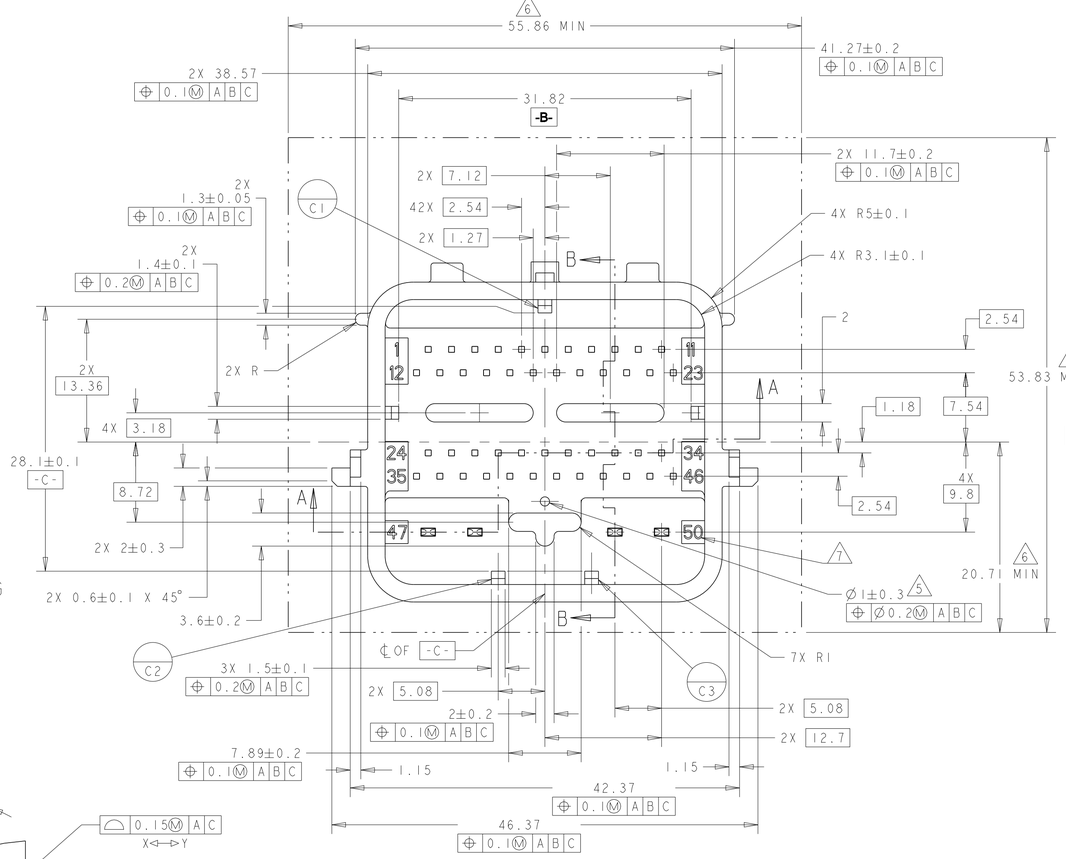

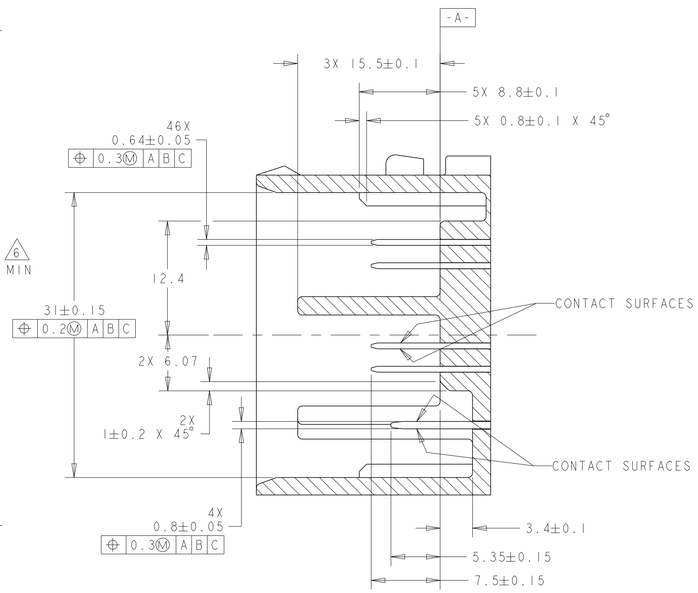

SECTION B-B

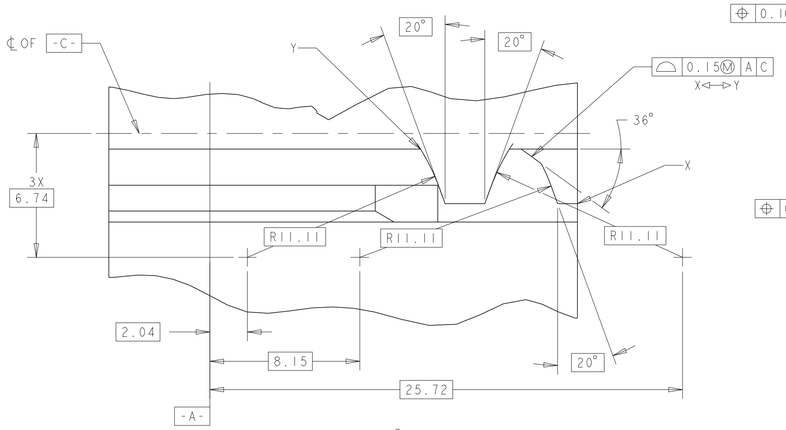

DETAIL G
SCALE 6:1
2 PLC

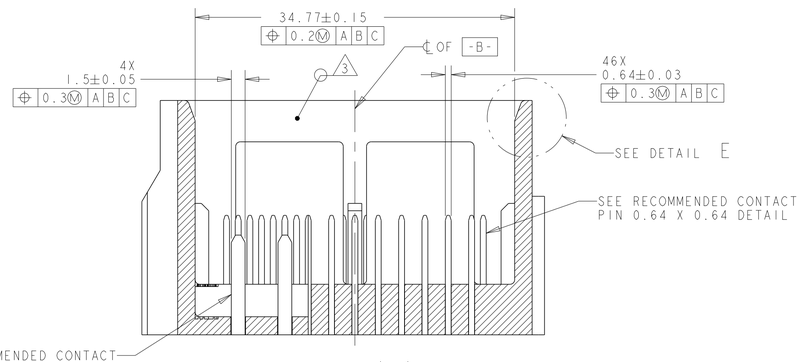

SECTION A-A

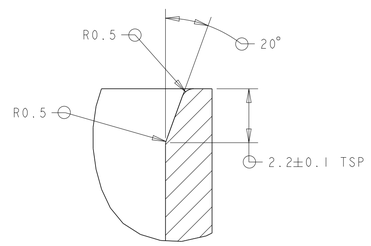

DETAIL E
SCALE 8:1

THIS DRAWING IS A CONTROLLED DOCUMENT.	DWN B. CRISAMORE 21JUL2004	TE Connectivity	
	CHK M. HITCHCOCK 21JUL2004		
DIMENSIONS: mm	APVD C. MARTIN 21JUL2004	NAME ASSEMBLY, 50-WAY, KEY A, PCM HARNESS	
TOLERANCES UNLESS OTHERWISE SPECIFIED: 0 PLC ±- 1 PLC ±0.3 2 PLC ±0.10 3 PLC ±- 4 PLC ±- ANGLES ±1°	PRODUCT SPEC -		
	APPLICATION SPEC -	SIZE A1 / CAGE CODE 00779 / DRAWING NO C-1438691 / RESTRICTED TO -	
MATERIAL - -	WEIGHT -		
FINISH - -	Customer Drawing	SCALE 2:1 / SHEET 2 OF 4 / REV A17	

Downloaded from Arrow.com.

THIS DRAWING IS UNPUBLISHED. RELEASED FOR PUBLICATION 20
© COPYRIGHT 20 BY - ALL RIGHTS RESERVED.

REVISIONS

P	LTR	DESCRIPTION	DATE	DWN	APVD
	-	SEE SHEET 1	-	-	-

KEYING OPTION A

| | | |

THIS DRAWING IS UNPUBLISHED. RELEASED FOR PUBLICATION 20
© COPYRIGHT 20 BY - ALL RIGHTS RESERVED.

REVISIONS

P	LTR	DESCRIPTION	DATE	DWN	APVD
	-	SEE SHEET 1	-	-	-

KEYING OPTION A

| | | |