© – TE Connectivity. All Rights Reserved.

REVISIONS					
P	LTR	DESCRIPTION	DATE	DWN	APVD
	H	PCN-25-266608	26MAY2026	GSK	CAS

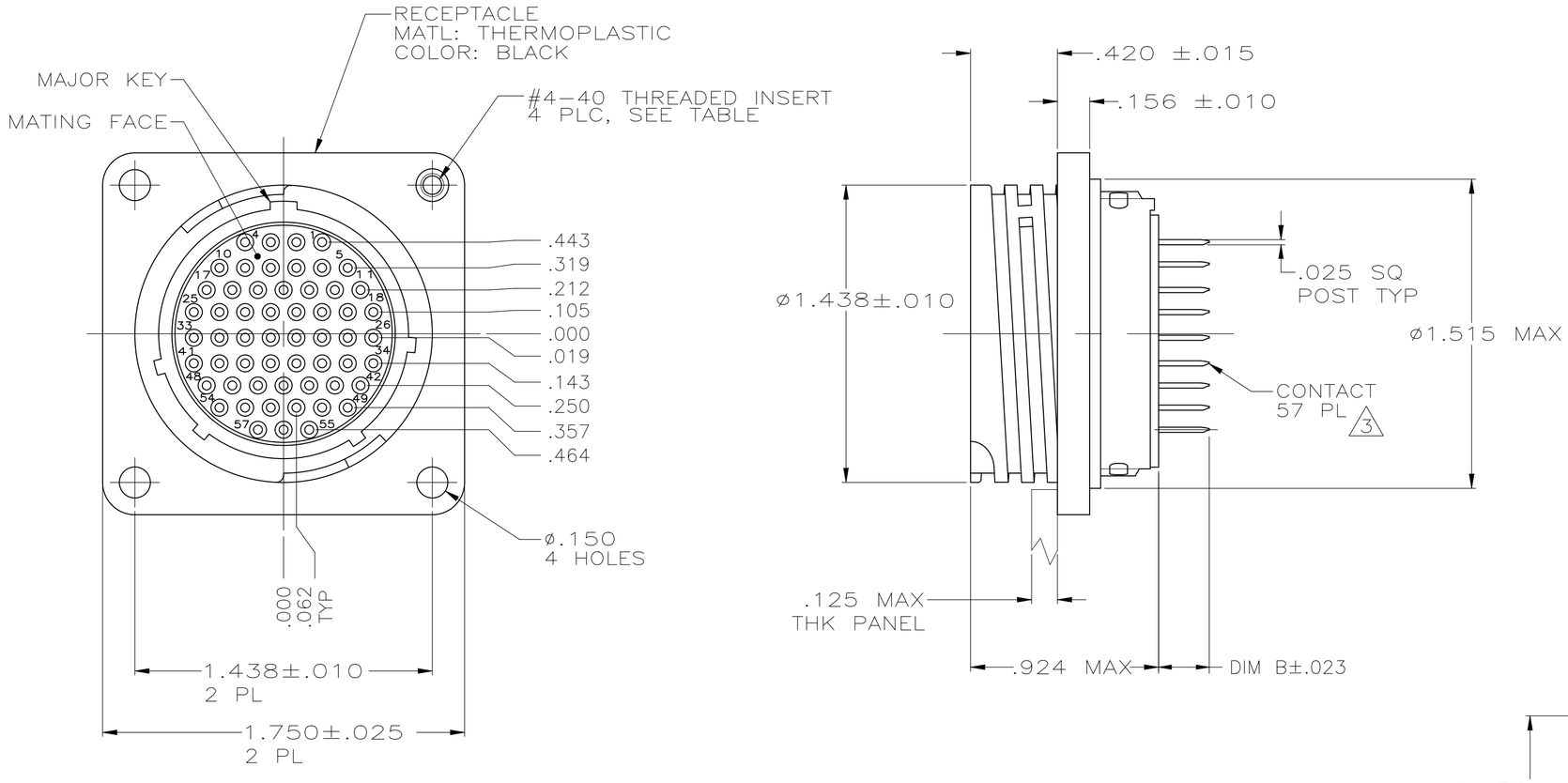

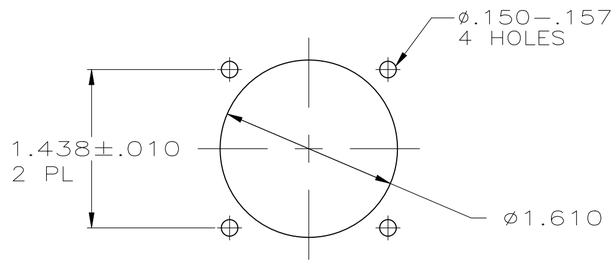

PANEL CUTOUT

SCALE: 1:1

	DIM B	CONTACT FINISH	4-40 THREADED INSERTS	PART NUMBER
	.245	4	NO	1-796329-1
7 OBSOLETE	.557	5	NO	796329-5
	.467	5	NO	796329-4
	.245	4	YES	796329-3
OBSOLETE	.245	3	YES	796329-2
OBSOLETE	.245	3	NO	796329-1

1. CONTACT CAVITIES IDENTIFIED BY CHARACTERS ON FRONT AND REAR FACES OF CONNECTOR.
2. #4 FASTENER RECOMMENDED FOR MOUNTING.
3. .000030 MIN GOLD FOR A LENGTH OF .100 MIN FROM MATING END, .000100 MIN TIN-LEAD FOR A LENGTH OF .565 FROM OPPOSITE END, ALL OVER .000050 MIN NICKEL.
4. .000030 MIN GOLD FOR A LENGTH OF .100 MIN FROM MATING END, .000100 MIN TIN FOR A LENGTH OF .565 FROM OPPOSITE END, ALL OVER .000050 MIN NICKEL.
5. .000001 MIN GOLD FOR A LENGTH OF .100 MIN FROM MATING END, .000100 MIN TIN ON TAIL LENGTH, ALL OVER .000050 MIN NICKEL.
6. RECOMMENDED PC BOARD HOLE SIZE FOR CONTACT POST = .041±.003 DIA.
7. PRELIMINARY PART NUMBER.

THIS DRAWING IS A CONTROLLED DOCUMENT.

DIMENSIONS: INCHES

TOLERANCES UNLESS OTHERWISE SPECIFIED:
0 PLC ± –
1 PLC ± –
2 PLC ± –
3 PLC ± .005
4 PLC ± –
ANGLES ± –

MATERIAL –

FINISH –

DWN HAMNER 1-31-00
CHK M.CHACKO 2-1-00
APVD M.CHACKO 2-1-00
PRODUCT SPEC –
APPLICATION SPEC –
WEIGHT

TE Connectivity

NAME
RECEPTACLE ASSY, POSTED, REV SEX, SIZE 23-57, SERIES 2, CPC

SIZE	CAGE CODE	DRAWING NO	RESTRICTED TO
A2	00779	C-796329	–

CUSTOMER DRAWING | SCALE 2:1 | SHEET 1 OF 1 | REV H

796329

Downloaded from Arrow.com.