MICRO SWITCH
a Honeywell Division
FED. MFG. CODE 91929

SWITCH-ENCLOSED

CATALOG LISTING
BFL1-AW1

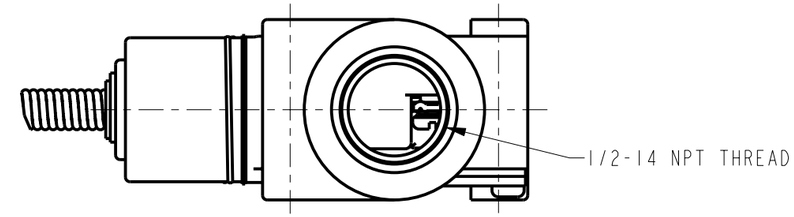

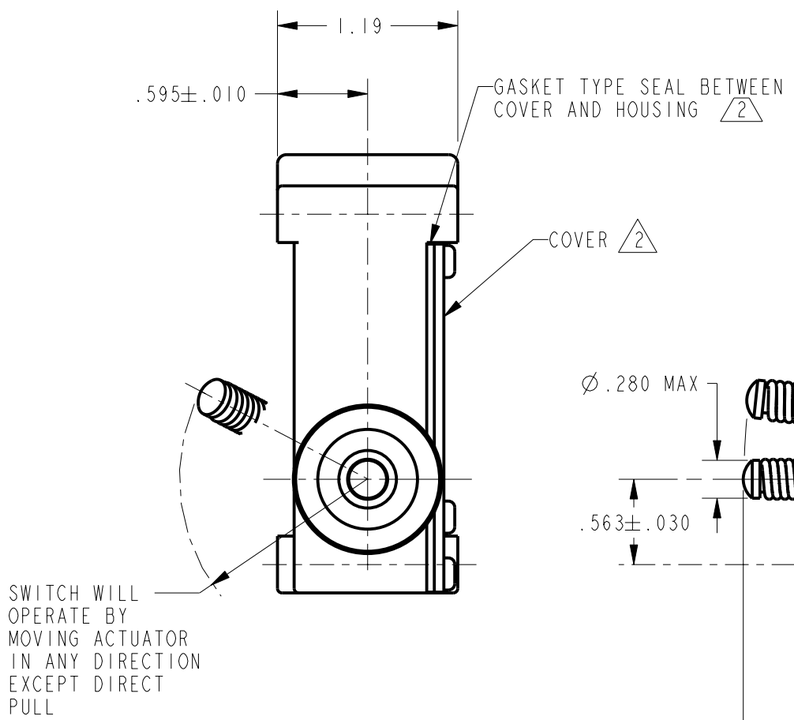

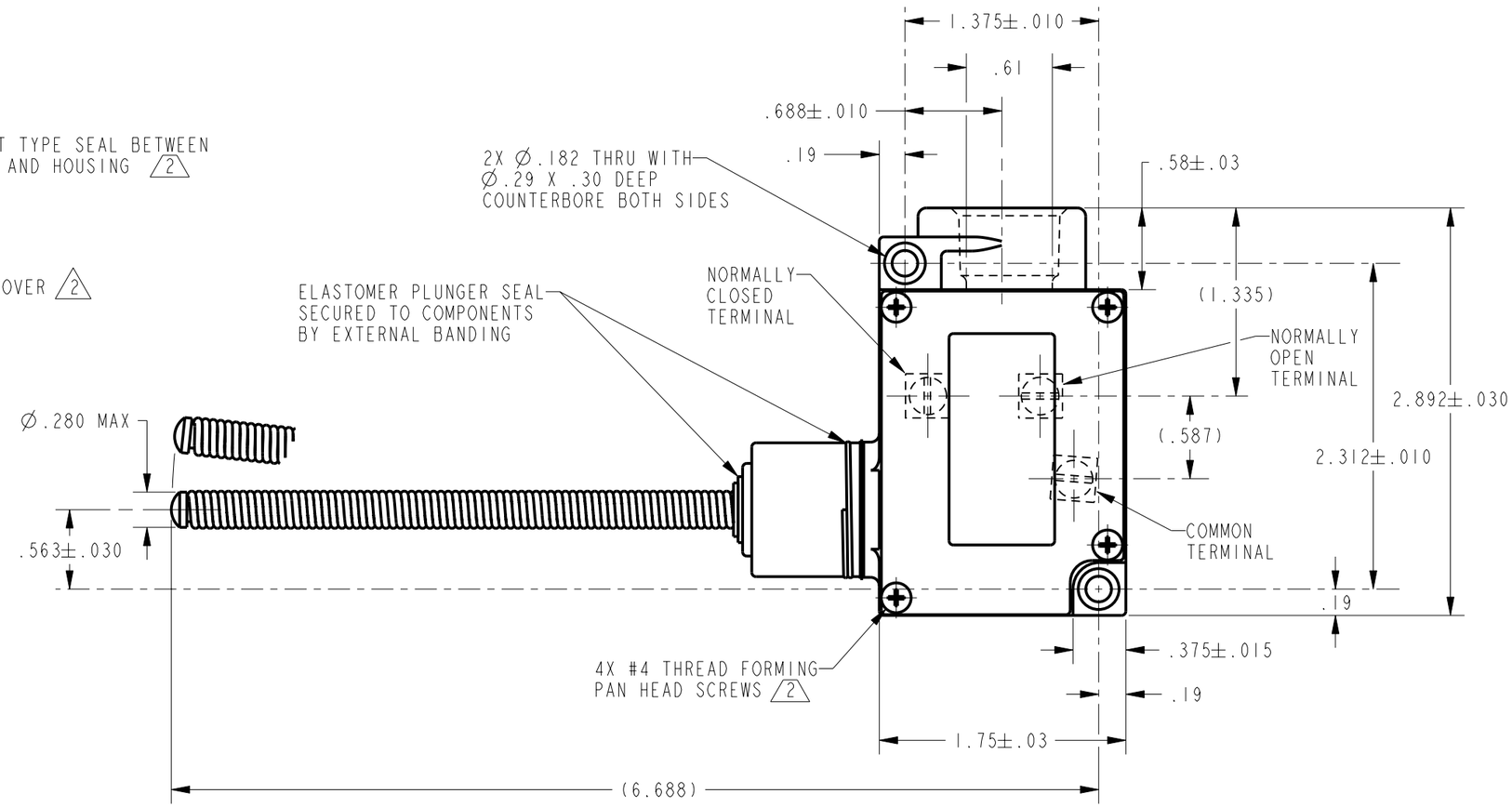

NOTES
1 - 3X 6-32 UNC PRESSURE PLATE TERMINAL SCREWS
2 FURNISHED UNASSEMBLED

THIS DRAWING COVERS A PROPRIETARY ITEM AND IS THE PROPERTY OF MICRO SWITCH. A DIVISION OF HONEYWELL. THIS DRAWING IS NOT TO BE COPIED OR USED WITHOUT THE APPROVAL OF MICRO SWITCH

THIRD ANGLE PROJECTION

SCALE FULL

DO NOT SCALE PRINT

UNLESS OTHERWISE SPECIFIED TOLERANCES ARE

ONE PLACE	(.0)	±.030
TWO PLACE	(.00)	±.015
THREE PLACE	(.000)	±.005
ANGLES		±

WEIGHT

ANSI Y14.5M-1982 APPLIES

CHARACTERISTICS	ELECTRICAL DATA
OPERATING POSITION: ..... 15° MAX	CONTACT ARRANGEMENT S P D T
OPERATING FORCE: ..... 7 OZ MAX	L162 5A 125, 250, 277 VAC 1/10 HP 250 VAC

PTC/CAD 3D			
DRAWN	TRF	05SEP01	
CHECK			
CHECK	SAV	05SEP01	
CHECK			
CHECK			
REVISIONS			
ISSUE	1		
PAGE	1 OF 1		
CATALOG LISTING	M		
BFL1-AW1			
RELEASE NO.	203802		
REPLACES			

Downloaded from Arrow.com.