Step-Down, Step-Up and Isolation Transformers

RoHS

Auto/Isolation Transformers

Isolation Transformers have two (2) separate windings with an electrostatic shield between them to provide complete electrical isolation from the source.

Auto Transformers have one (1) winding that is tapped to achieve specific output voltage. They provide no electrical isolation in a circuit.

Auto Transformers are typically smaller than their Isolation equivalent.

• Designed for 50/60 Hertz



Style C



Style A

— See Accessories, pages 40-41, for International Adapter Plugs

Sec.	STANCOR PART NUMBER	Type	Voltage Step	Input Voltage	Output Voltage	Amps	V.A. Cap.	RMS Test Voltage	Style	DIMENSIONS-INCHES H	Case W	D	Mounting MW	Mounting MD	Weight (lbs.)	Agency Certif.
A	P-6287	Auto	Down	230	115	0.35	40	1500	C	3.13	2.50	2.75	2.00	1.75	2.20	
	P-8620‡	Auto	Down	230	115	0.43	50	1500	A	2.31	3.69	1.88	3.13	-	1.50	-
	GSD-75	Auto	Down	230	115	0.65	75	1500	C	3.13	2.50	2.88	2.00	1.75	3.00	-
	P-8630	Auto	Down	230	115	0.74	85	1500	C	3.13	2.50	2.88	2.00	1.75	2.50	-
	GSD-100	Auto	Down	230	115	0.87	100	1500	C	3.13	2.50	3.13	2.00	2.06	3.70	-
B	P-8631	Auto	Down	230	115	1.10	125	1500	C	3.13	2.50	3.00	2.00	2.06	3.00	-
	GSD-150	Auto	Down	230	115	1.30	150	1500	C	3.88	3.13	3.25	2.50	2.22	4.40	-
	P-8632	Auto	Down	230	115	1.74	200	1500	C	3.88	3.13	3.25	2.50	2.22	4.20	-
	GSD-250	Auto	Down	230	115	2.20	250	1500	C	3.88	3.13	3.63	2.50	2.22	5.80	-
	GSD-300	Auto	Down	230	115	2.60	300	1500	C	3.88	3.13	3.63	2.50	2.22	5.80	-
C	GSD-350	Auto	Down	230	115	3.00	350	1500	C	3.88	3.13	4.31	2.50	2.72	7.30	-
	P-8634	Auto	Down	230	115	3.50	400	1500	C	3.88	3.13	4.25	2.50	2.72	7.00	-
	GSD-500	Auto	Down	230	115	4.30	500	1500	C	4.63	3.81	4.44	3.00	3.19	10.6	-
	GSD-750	Auto	Down	230	115	6.50	750	1500	C	4.63	3.81	5.38	3.00	3.94	14.4	-
	GSD-1000	Auto	Down	230	115	8.70	1000	1500	C	4.63	3.81	6.06	3.00	4.69	17.0	-
	GSD-1500	Auto	Down	230	115	13.0	1500	1500	C	5.38	4.44	6.00	3.50	4.00	20.0	-
D	P-8638	Auto	Up	115	230	0.54	125	1500	C	3.13	2.50	3.00	2.00	2.06	3.00	-
	P-8639	Auto	Up	115	230	1.30	300	1500	C	3.88	3.13	3.88	2.50	2.22	5.20	-
	P-8640	Auto	Up	115	230	2.17	500	1500	C	4.63	3.75	4.50	3.00	3.19	10.3	-
	P-8689	Auto	Up	115	230	4.35	1000	1500	C	4.63	3.75	6.13	3.00	4.69	17.0	-
E	P-6413‡	Isolation	Straight	115	115	0.005	0.60	1500	A	1.25	2.13	1.25	1.75	-	0.25	-
	P-6411‡	Isolation	Straight	115	115	0.13	15	1500	A	2.00	3.25	1.88	2.81	-	1.00	-
	P-6412‡	Isolation	Straight	115	115	0.30	35	1500	A	2.31	3.75	2.00	3.13	-	1.70	-
	P-6410	Isolation	Straight	115	115	0.43	50	1500	C	3.50	2.81	3.50	2.25	2.00	3.70	-
F	P-8622†‡	Isolation	Straight	115	▲115/230	1.30	150	1500	C	3.88	3.13	4.00	2.50	2.72	6.20	-
	P-6406‡	Isolation	Straight	115/230*†	115	0.43	50	1500	A	2.38	3.75	2.31	3.13	-	1.80	-
G	GIS-100	Isolation	Straight	115	115	0.87	100	1500	C	3.50	2.81	3.56	2.25	2.28	4.50	-
	GIS-150	Isolation	Straight	115	115	1.30	150	1500	C	3.88	3.13	4.19	2.50	2.72	7.00	-
	GIS-250	Isolation	Straight	115	115	2.17	250	1500	C	4.69	3.75	4.38	3.00	3.19	9.00	-
	GIS-500	Isolation	Straight	115	115	4.35	500	1500	C	4.69	3.75	6.00	3.00	4.69	16.0	-
	GIS-1000	Isolation	Straight	115	115	8.70	1000	1500	C	5.38	4.38	8.13	3.50	6.50	31.0	-
H	GISD-100	Isolation	Down	230	115	0.87	100	1500	C	3.50	2.81	3.63	2.25	2.28	4.50	-
	GISD-150	Isolation	Down	230	115	1.30	150	1500	C	3.88	3.13	4.19	2.50	2.72	7.00	-
	GISD-250	Isolation	Down	230	115	2.17	250	1500	C	4.69	3.75	4.38	3.00	3.19	9.00	-
	GISD-500	Isolation	Down	230	115	4.35	500	1500	C	4.69	3.75	6.00	3.00	4.69	16.0	-
	GISD-1000	Isolation	Down	230	115	8.70	1000	1500	C	5.38	4.38	8.13	3.50	6.50	31.0	-

† Has electrostatic shield on separate leadwire (not grounded)

▲ Secondary is two separate 115 volt windings – can be wired independently

‡ Has lead wires

* Primary is two separate 115 volt windings

For outline drawings refer to page 39

Downloaded from Arrow.com.

Style A

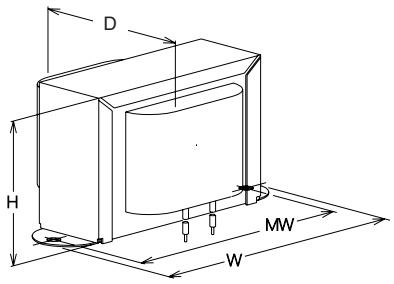

Style C

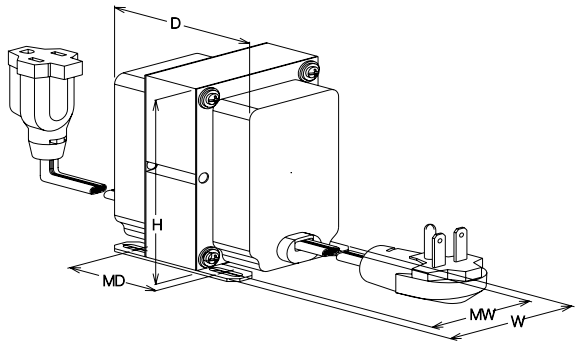

GENERAL INFORMATION

Standard length of the input and output cords:

- Input Cord = 5 1/2 Feet minimum
- Output Cord = 8 Inches minimum

Auto/Isolation Transformers can be used in most countries by using an input adapter plug. See page 40 for STANCOR's high quality line of International Adapter Plugs.

WHY & WHERE AUTO & ISOLATION TRANSFORMERS ARE USED

Stancor's stock Auto Transformers are connected for either step-down or step-up applications involving line voltages of 115 or 230 Volts., 50/60 Hertz. When isolation between the primary and secondary circuits is not necessary, and a direct connection between them is permissible, the Auto Transformer offers the advantages of smaller size, less weight, and lower cost.
This type of unit is generally used in applications involving American appliances used abroad where our standard 115 Volt equipment must operate from a 230 Volt source. It is also used for foreign appliances designed for 230 Volt operation, which are to be used on our 115 Volt circuits. Our catalog items are designed for continuous rated output on either 50 or 60 Hertz.

It is important to bear in mind that the Auto/Isolation Transformers change only the voltage levels and do not change the frequency from 50 to 60 Hertz or vice versa. In appliances using synchronous motors, such as clocks or phonograph record changers and players, the speed will be different when using them on a frequency which differs from the frequency they were originally designed. In these cases the manufacturer of the appliance should be consulted to obtain the proper motor.

The VA rating is equivalent to a Wattage rating where a resistive load and/or unity power factor exists. When inductive loads such as motors are used (as in a motor driven appliance) the power factor is not unity and to be accurate the output is expressed in VA, which is the product of the output voltage and the output current (Amps).

When selecting one of these items for use with an appliance which includes a motor, allowance should be made for the starting current of the motor which is somewhat higher than the running current. This information is generally available from the appliance manufacturer. Information pertaining to the AC Wattage or current required by an appliance is generally marked on the item by the manufacturer and should be observed. It is much better to buy a transformer with a larger VA rating than you will actually need because of larger motor starting currents and variations in the line voltage and/or frequency in some locations, which could cause overheating.

Isolation Transformers

Used where a direct connection between primary and secondary circuits is not desired and the circuits must be isolated. This results in a larger, heavier and more costly item for a given power rating. However, in addition to the isolating advantages, an electrostatic shield is generally added to minimize capacitive coupling between primary and secondary circuits. This helps to minimize the transfer of unwanted power line transients and interference from other sources connected to the power line by capacitive coupling to the secondary circuit. The standard insulation test voltage rating between windings and between each winding and the core is 1,500 Volts R.M.S. This is normally sufficient for 115 and 230 Volt operation.

The VA rating should be selected for each specific application, with allowance for any abnormal load or environmental conditions. All catalog items have an operating temperature of 105 Degrees C. (Designed for a 65 Degrees C. maximum temperature rise above a maximum ambient temperature for 40 Degrees C., with unrestricted free air ventilation.) V-A/Amps output ratings are for continuous operation from the specified input voltage and frequency.

General Information

All of these items have Class "A" insulation and are rated to have a maximum operating temperature of 105 Degrees C. These units may be used with rectifiers but the form factor as explained elsewhere in this catalog should be observed for various combinations of rectifier circuits and types of load following the rectifier.

These items are made with our standard N.E.M.A. plugs and receptacles, primarily for use in this country. However, if used overseas where different types of plugs are necessary, an adapter plug should be used or our plug removed and a foreign plug attached to the end of the line cord.

Downloaded from Arrow.com.