Datasheet

Type 2JM Wi-Fi™ Module

Qualcomm QCC730 Chipset for 802.11a/b/g/n
Datasheet - Rev. 4

- Design Name: Type 2JM
- P/N: LBWA0ZZ2JM-001

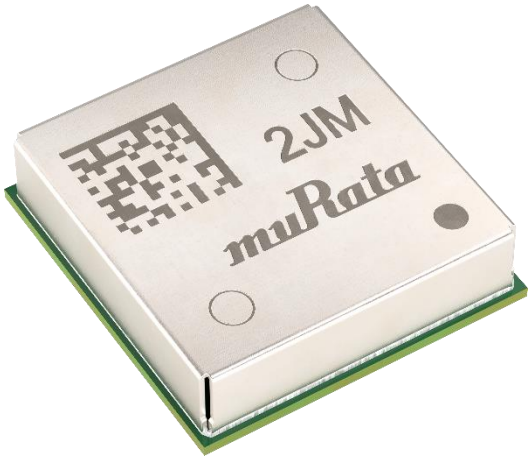

Downloaded from Arrow.com.

Table of Contents

1 Scope 5
2 Key Features 5
3 Ordering Information 5
4 Block Diagram 6
5 Certification Information 7
5.1 Radio Certification 7
5.2 Radio Regulatory Certification by Country 8
6 Dimensions, Markings and Terminal Configurations 9
7 Module Pin Descriptions 10
7.1 Pin Assignments 10
7.2 Pin Descriptions 12
7.3 Configuration pins 13
7.4 Pin State 14
7.5 I/O Pin Mux Table 14
8 Absolute Maximum Ratings 15
9 Operating Conditions 15
9.1 Operating Conditions 15
9.2 Digital I/O Requirements 16
9.3 Sleep clock conditions 17
9.4 Power modes 18
9.5 Package Thermal Conditions 19
10 Power Sequence 20
11 DC / RF Characteristics 21
11.1 DC/RF Characteristics for IEEE 802.11b - 2.4 GHz 21
11.1.1 High-Rate Condition for IEEE 802.11b - 2.4 GHz 21
11.1.2 Low-Rate Condition for IEEE 802.11b - 2.4 GHz 22
11.2 DC/RF Characteristics for IEEE 802.11g - 2.4 GHz 23
11.2.1 High-Rate Condition for IEEE 802.11g - 2.4 GHz 23
11.2.2 Low-Rate Condition for IEEE 802.11g - 2.4 GHz 24
11.3 DC/RF Characteristics for IEEE 802.11n (HT20) - 2.4 GHz 25
11.3.1 High-Rate Condition for IEEE 802.11n (HT20) - 2.4 GHz 25
11.3.2 Low-Rate Condition for IEEE 802.11n (HT20) - 2.4 GHz 26
11.4 DC/RF Characteristics for IEEE 802.11a - 5 GHz 27
11.4.1 High-Rate Condition for IEEE 802.11a - 5 GHz 27
11.4.2 Low-Rate Condition for IEEE 802.11a - 5 GHz 28

Downloaded from Arrow.com.

11.5 DC/RF Characteristics for IEEE 802.11n (HT20) - 5 GHz....29
11.5.1 High-Rate Condition for IEEE 802.11n (HT20) - 5 GHz....29
11.5.2 Low-Rate Condition for IEEE 802.11n (HT20) - 5 GHz....30
12 Land Pattern....31
13 Tape and Reel Packing....32
13.1 Dimensions of Tape (Plastic Tape)....32
13.2 Dimension of Reel....33
13.3 Taping Diagrams....34
13.4 Leader and Tail Tape....35
13.5 Packaging (Humidity Proof Packing)....36
14 Notice....37
14.1 Storage Conditions....37
14.2 Handling Conditions....37
14.3 Standard PCB Design (Land Pattern and Dimensions)....37
14.4 Notice for Chip Placer....38
14.5 Soldering Conditions....38
14.6 Cleaning....38
14.7 Operational Environment Conditions....39
15 Preconditions to Use Our Products....40
Revision History....42

Figures

Figure 1: Block Diagram....6
Figure 2: Dimensions, Markings and Terminal Configurations....9
Figure 3: Structure....10
Figure 4: Pin Assignments Bottom View....10
Figure 5: External 32.768 kHz sleep clock timing....17
Figure 6: Package Thermal Conditions....19
Figure 7: Power on and Power off Sequence....20
Figure 8: Land Pattern (TOP VIEW)....31
Figure 9: Dimensions of Tape (Unit: mm)....32
Figure 10: Dimensions of Reel (Unit: mm)....33
Figure 11: Taping Diagrams....34
Figure 12: Taping Diagrams (Close Up)....34
Figure 13: Leader and Tail Tape....35
Figure 14: Peeling Force....35
Figure 15: Humidity Proof Packaging....36

Downloaded from Arrow.com.

Figure 16: Reflow Soldering Standard Conditions (Example) 38

Tables

Table 1: Document Conventions 4
Table 2: Ordering Information 5
Table 3: Transmit Power Limit Files 7
Table 4: Markings 9
Table 5: Dimensions 9
Table 6: Terminal Configurations 11
Table 7: Pin Descriptions 12
Table 8: Conditions of bootstrap configuration pins 13
Table 9: GPIO pull state setting for difference GPIO for UART option 14
Table 10: GPIO Mux Table 14
Table 11: Absolute Maximum Ratings 15
Table 12: Operating Conditions 15
Table 13: Digital I/O Requirements Parameters (3.3V I/O operation) 16
Table 14: Digital I/O Requirements Parameters (1.8V I/O operation) 16
Table 15: External Sleep Clock Requirements Parameters 17
Table 16: Sleep modes 18
Table 17: Characteristics Values for IEEE 802.11b - 2.4 GHz 21
Table 18: High-Rate Condition for IEEE 802.11b - 2.4 GHz 21
Table 19: Low-Rate Condition for IEEE 802.11b - 2.4 GHz 22
Table 20: Characteristics Values for IEEE 802.11g - 2.4 GHz 23
Table 21: High-Rate Condition for IEEE 802.11g - 2.4 GHz 23
Table 22: Low-Rate Condition for IEEE 802.11g - 2.4 GHz 24
Table 23: Characteristics Values for IEEE 802.11n (HT20) - 2.4 GHz 25
Table 24: High-Rate Condition for IEEE 802.11n (HT20) - 2.4 GHz 25
Table 25: Low-Rate Condition for IEEE 802.11n (HT20) - 2.4 GHz 26
Table 26: Characteristics Values for IEEE 802.11a - 5 GHz 27
Table 27: High-Rate Condition for IEEE 802.11a - 5 GHz 27
Table 28: Low-Rate Condition for IEEE 802.11a - 5 GHz 28
Table 29: Characteristics Values for IEEE 802.11n (HT20) - 5 GHz 29
Table 30: High-Rate Condition for IEEE 802.11n (HT20) - 5 GHz 29
Table 31: Low-Rate Condition for IEEE 802.11n (HT20) - 5 GHz 30
Table 32: Taping Specifications 34

Downloaded from Arrow.com.

About This Document

Murata's Type 2JM is a small and ultra-low power consumption module based on Qualcomm's QCC730 WiFi chipset, supporting IEEE 802.11a/b/g/n (up to MCS3). This datasheet describes Type 2JM module in detail.

Please be aware that an important notice concerning availability, standard warranty and use in critical applications of Murata products and disclaimers thereto appears at the end of this specification sheet.

Audience & Purpose

Intended audience includes any customer looking to integrate this module into their product. In particular, RF, hardware, software, and systems engineers.

Document Conventions

Table 1 describes the document conventions.

Table 1: Document Conventions

Conventions	Description
	Warning Note Indicates very important note. Users are strongly recommended to review.
	Info Note Intended for informational purposes. Users should review.
	Menu Reference Indicates menu navigation instructions. **Example**: Insert→Tables→Quick Tables→Save Selection to Gallery
	External Hyperlink This symbol indicates a hyperlink to an external document or website. **Example**: Murata Manufacturing Co., Ltd. Click on the text to open the external link.
	Internal Hyperlink This symbol indicates a hyperlink within the document. **Example**: Scope Click on the text to open the link.
`Console input/output or code snippet`	**Console I/O or Code Snippet** This text ***Style*** denotes console input/output or a code snippet.
`# Console I/O comment` `// Code snippet comment`	**Console I/O or Code Snippet Comment** This text ***Style*** denotes a console input/output or code snippet comment. • Console I/O comment (preceded by "#") is for informational purposes only and does not denote actual console input/output. • Code Snippet comment (preceded by "//") may exist in the original code.

Downloaded from Arrow.com.

1 Scope

This specification characterizes the IEEE 802.11a/b/g/n WiFi module.

2 Key Features

- Qualcomm QCC730 micropower WiFi chip inside
- Supports IEEE 802.11a/b/g/n specification: Dual band 2.4 GHz and 5 GHz
- SISO with 20 MHz channels
- Up to MCS3 data rates
- On chip Microcontroller and Memory (Cortex-M4 60MHz, 1.5MB RRAM, 640KB SRAM)
- Support external flash memory to extend user programable memory area and XiP boot.
- Interface: 1x SPI(Peripheral),1x QSPI(Controller),1x I2C(Controller),UART (2-wire),15x GPIO
- Temperature Range: -20 °C to 85 °C
- Dimensions: 8.47 x 8.1 x 2.35 mm
- Weight: 231 mg
- MSL: 3
- Surface-mount type
- RoHS compliant
- Total FIT: 71.4

3 Ordering Information

Table 2 provides the ordering information for Type 2JM module.

Table 2: Ordering Information

Ordering Part Number	Description
LBWA0ZZ2JM-001	Type2JM Module Mass Production P/N
LBWA0ZZ2JM-SMP	Type2JM Module Sample P/N
LBWA0ZZ2JM-EVB	Type2JM Evaluation Board P/N

Downloaded from Arrow.com.

4 Block Diagram

Figure 1 shows the block diagram of Type 2JM module.

Figure 1: Block Diagram

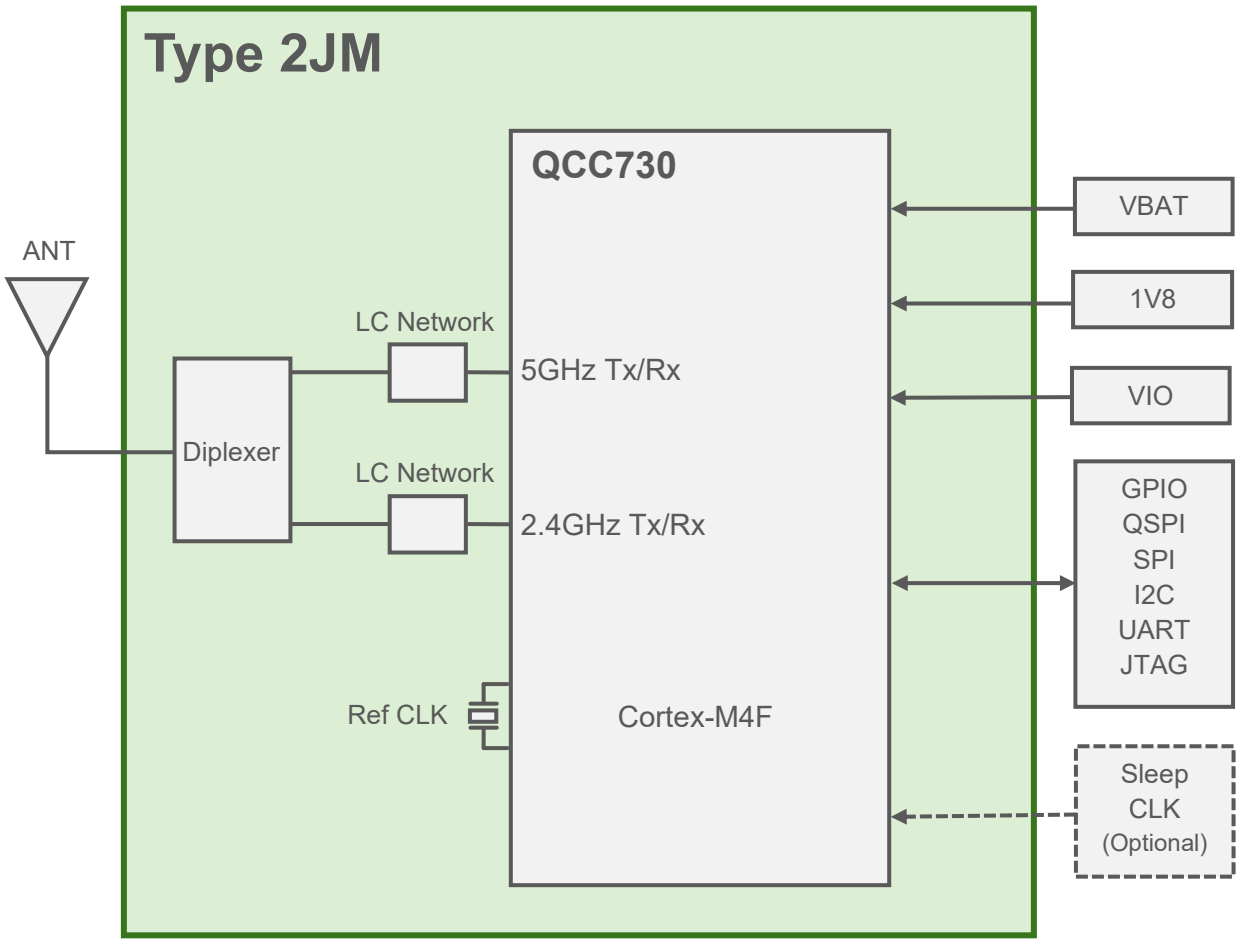

Downloaded from Arrow.com.

5 Certification Information

This section has information about radio certification.

5.1 Radio Certification

Transmit output power setting and Country output power setting is written in OTP and BDF field. Please do not overwrite OTP and BDF area. See below memory map. Regulatory/Country transmit power configuration files to leverage Murata's regulatory Certification are provided at GitHub murata-wireless.

Table 3: Transmit Power Limit Files

Country	ID	Country Code		Remarks
USA (FCC)	FCC 15.247, 15.407 VPYLBWA0ZZ2JM	US	840	
Canada (IC)	RSS-247 772C-LBWA0ZZ2JM	CA	124	
Europe	EN300328, EN301893	DE	276	Conducted test report
Japan	Japanese type certification is prepared. R 003-250368	JP	392	
Taiwan (NCC)	LP0002 CCAM26Y20010T1	TW	158	Need Host certification
Australia/New Zealand (RCM)	AS/NZS 4268:2017	AU	36	Conducted test report
		NZ	554	

RRAM Memory map

		0x1A0000
OTP	4K	0X1A1000
Reserved		0x200000
PBL	32K	0x208000
FDT	1K	0x208400
PBL patch	8K	0x20A400
SBLA	32K	0x212400
SBLB	32K	0x21A400
APP		0x37A000
BDF	24K	

Downloaded from Arrow.com.

5.2 Radio Regulatory Certification by Country

Murata have prepared the document about Radio Regulatory Certification separately.

This document is designed to ensure that module manufacturers correctly communicate the necessary information to host manufacturers that incorporate their modules.

Refer to [Regulatory Information]: Type 2JM Radio Law Approval Application Note for Radio Law Certification user manual.

If you don't follow the rule written in Type 2JM Radio Law Approval Application Note, there is a risk of conflict Radio Law Certification.
Please be sure to check the documents.

Downloaded from Arrow.com.

6 Dimensions, Markings and Terminal Configurations

This section has information on dimensions, markings, and terminal configurations.

Figure 2: Dimensions, Markings and Terminal Configurations

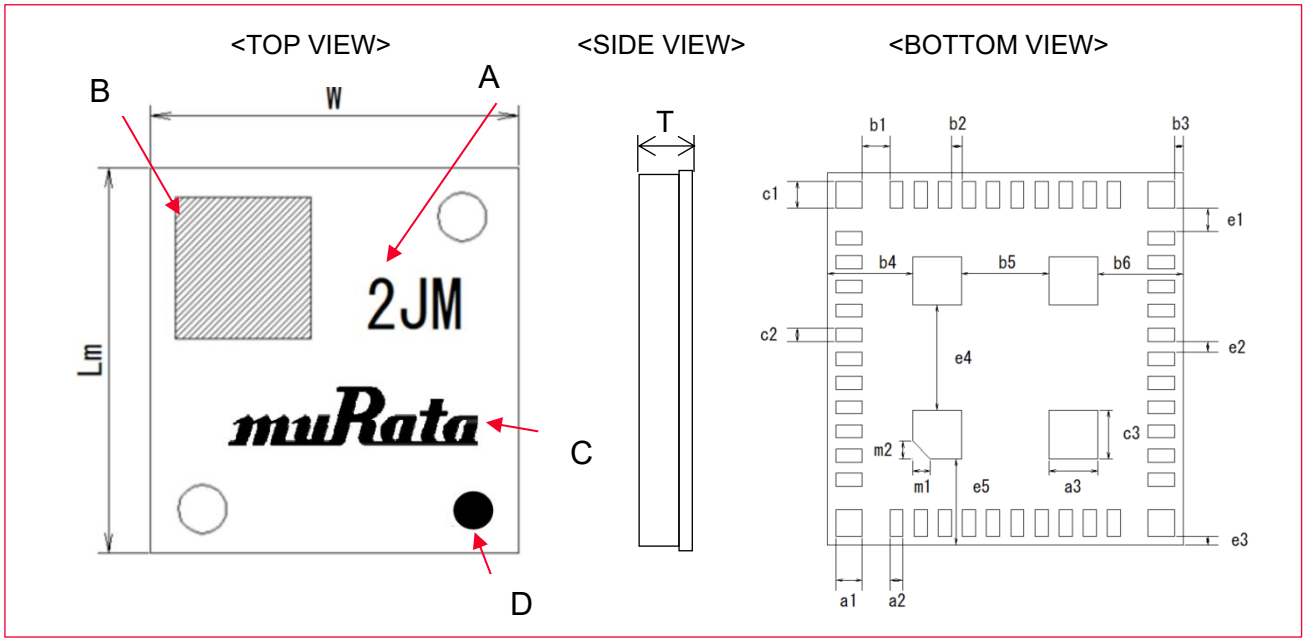

Table 4: Markings

Marking	Meaning
A	Module Type
B	2D Code
C	Murata Logo
D	Pin1 indicator

Table 5: Dimensions

Marks	Dimensions	Marks	Dimensions	Marks	Dimensions
Lm	8.47 ± 0.2	W	8.1 ± 0.2	T	2.35mm MAX
a1	0.6 ± 0.1	a2	0.3 ± 0.1	a3	1.0 ± 0.1
b1	0.625 ± 0.1	b2	0.25 ± 0.1	b3	0.2 ± 0.1
b4	2.0 ± 0.1	b5	2.1 ± 0.1	b6	2.0 ± 0.1
c1	0.6 ± 0.1	c2	0.3 ± 0.1	c3	1.0 ± 0.1
e1	0.535 ± 0.1	e2	0.25 ± 0.1	e3	0.2 ± 0.1
e4	2.5 ± 0.1	e5	2.0 ± 0.1		
m1	0.4 ± 0.1	m2	0.4 ± 0.1		

T dimension does not include height of solder bumps.
Unit of Dimensions are in mm.

Downloaded from Arrow.com.

Figure 3 shows the structure of Type 2JM.

Figure 3: Structure

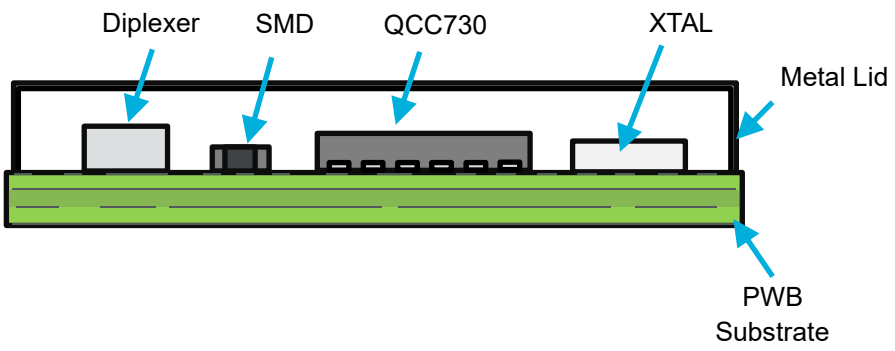

7 Module Pin Descriptions

This section has the pin descriptions of Type 2JM and pin assignments layout descriptions.

7.1 Pin Assignments

The pin assignment (Bottom View) layout is shown in **Figure 4**.

Figure 4: Pin Assignments Bottom View

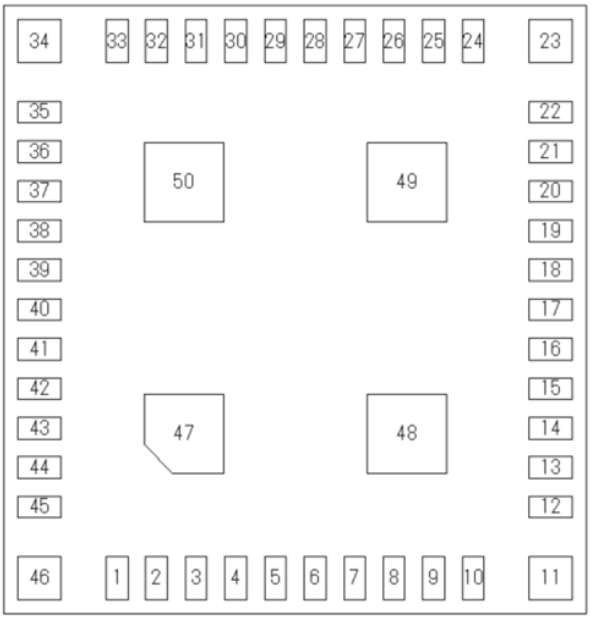

Downloaded from Arrow.com.

Table 6 illustrates the terminal configurations.

Table 6: Terminal Configurations

No.	Terminal Name	No.	Terminal Name	No.	Terminal Name
1	GPIO_11	18	JTAG_TDI	35	GND
2	GPIO_4	19	JTAG_TMS	36	GND
3	GPIO_6	20	JTAG_TRST_N	37	GND
4	GPIO_5	21	JTAG_TDO	38	1V8
5	GPIO_3	22	JTAG_TCK	39	GND
6	GPIO_2	23	GND	40	GPIO_14
7	GPIO_1	24	GND	41	GPIO_13
8	GPIO_0	25	GND	42	GND
9	EXT_WAKEUP_INTR_N	26	GND	43	GPIO_8
10	CHIP_ON	27	GND	44	GPIO_7
11	GND	28	RFIO	45	GPIO_12
12	VBAT	29	GND	46	GND
13	GND	30	GND	47	GND
14	VIO	31	GND	48	GND
15	GND	32	GND	49	GND
16	GPIO_10	33	GND	50	GND
17	GPIO_9	34	GND		

Downloaded from Arrow.com.

7.2 Pin Descriptions

Table 7 shows the pin description for Type 2JM modules.

Table 7: Pin Descriptions

No.	Pin name	I/O Type	Internal PU/PD		Power source	Descriptions
			Reset	Active		
1	GPIO_11	DIO	PD	PD	VIO	General purpose I/O. See Table 10. Option: XIP Flash ROM interface.
2	GPIO_4	DIO	PD	NP	VIO	General purpose I/O. See Table 10. Option: XIP Flash ROM interface.
3	GPIO_6	DIO	PD	PD	VIO	General purpose I/O. See Table 10. Option: XIP Flash ROM interface.
4	GPIO_5	DIO	PD	PD	VIO	General purpose I/O. See Table 10. Option: XIP Flash ROM interface.
5	GPIO_3	DIO	PD	PD	VIO	General purpose I/O. See Table 10. Bootstrap option pin. Set 1 during booting-up by internal 10k ohm pull-up for IoT mode. See section 7.3.
6	GPIO_2	DIO	PU	NP	VIO	General purpose I/O. See Table 10. Bootstrap option pin. Do not drive during booting-up with IoT mode.
7	GPIO_1	DIO	PU	NP	VIO	General purpose I/O. See Table 10. Bootstrap option pin. Do not drive during booting-up with IoT mode.
8	GPIO_0	DIO	PD	NP	VIO	General purpose I/O. See Table 10.
9	EXT_WAKEUP_INTR_N	DI	PU	PU	VIO	External wakeup input
10	CHIP_ON	DI	-	-		Chip power on. Can be Open. This terminal has internal RC delay circuit.
11	GND	GND	-	-	-	Ground
12	VBAT	PWR	-	-	VBAT	VBAT power supply
13	GND	GND	-	-	-	Ground
14	VIO	PWR	-	-	VIO	VIO power supply
15	GND	GND	-	-	-	Ground
16	GPIO_10	DIO	PD	NP	VIO	General purpose I/O. See Table 10.
17	GPIO_9	DIO	PD	NP	VIO	General purpose I/O. See Table 10.
18	JTAG_TDI	DI	PU	PU	VIO	JTAG signal
19	JTAG_TMS	DI	PU	PU	VIO	JTAG signal
20	JTAG_TRST_N	DI	PU	PU	VIO	JTAG signal
21	JTAG_TDO	DO	PD	PD	VIO	JTAG signal
22	JTAG_TCK	DI	PD	PD	VIO	JTAG signal
23	GND	GND	-	-	-	Ground
24	GND	GND	-	-	-	Ground
25	GND	GND	-	-	-	Ground
26	GND	GND	-	-	-	Ground
27	GND	GND	-	-	-	Ground
28	RFIO	GND	-	-	-	Ground
29	GND	GND	-	-	-	Ground
30	GND	GND	-	-	-	Ground
31	GND	GND	-	-	-	Ground
32	GND	GND	-	-	-	Ground
33	GND	GND	-	-	-	Ground
34	GND	GND	-	-	-	Ground

Downloaded from Arrow.com.

No.	Pin name	I/O Type	Internal PU/PD		Power source	Descriptions
			Reset	Active		
35	GND	GND	-	-	-	Ground
36	GND	GND	-	-	-	Ground
37	GND	GND	-	-	-	Ground
38	1V8	GND	-	-	-	Ground
39	GND	GND	-	-	-	Ground
40	GPIO_14	DIO	PD	PD	VIO	General purpose I/O. See Table 10.
41	GPIO_13	DIO	PD	PD	VIO	General purpose I/O. See Table 10.
42	GND	GND	-	-	-	Ground
43	GPIO_8	DIO	PU	PU	VIO	General purpose I/O. See Table 10. Default: SPI Interrupt. Send approx. 2 usec pulse to the host once RX data is sent over to the host. Option: 32kHz Sleep clock in for more accurate sleep management than module internal sleep clock.
44	GPIO_7	DIO	PD	PD	VIO	General purpose I/O. See Table 10. Option: XIP Flash ROM interface.
45	GPIO_12	DIO	PU	PU	VIO	General purpose I/O. See Table 10. Option: XIP Flash ROM interface.
46	GND	GND	-	-	-	Ground
47	GND	GND	-	-	-	Ground
48	GND	GND	-	-	-	Ground
49	GND	GND	-	-	-	Ground
50	GND	GND	-	-	-	Ground

7.3 Configuration pins

Table 8 shows bootstrap configuration for Type 2JM modules.

Table 8: Conditions of bootstrap configuration pins

GPIO_1	GPIO_2	GPIO_3	mode	Descriptions
NA	NA	1	IoT mode	GPIO_3 is internally PU by 10k ohm. Do not driver GPIO_1 and GPIO_2 during booting up.
Others	Others	Others	Reserved	

Downloaded from Arrow.com.

7.4 Pin State

Table 9 shows GPIO pull state for UART option of Type 2JM module.

Table 9: GPIO pull state setting for difference GPIO for UART option

GPIO	Type	Reset	UART option 1 (GPIO 11/12) Reset	UART option 2 (GPIO 13/14) Reset	UART option 3 (GPIO 9/10) Reset	UART option 4 (GPIO 1/3) Reset
GPIO_0	DIO	PD	NP	NP	NP	NP
GPIO_1	DIO	PU	PU	PU	PU	PU
GPIO_2	DIO	PU	NP	NP	NP	NP
GPIO_3	DIO	PD	PU	PU	PU	PU
GPIO_4	DIO	PD	PD	PD	PD	PD
GPIO_5	DIO	PD	NP	PD	PD	PD
GPIO_6	DIO	PD	PD	PD	PD	PD
GPIO_7	DIO	PD	PD	PD	PD	PD
GPIO_8	DIO	PU	PU	PU	PU	PU
GPIO_9	DIO	PD	PU	PU	PU	PU
GPIO_10	DIO	PD	PD	PD	PU	PD
GPIO_11	DIO	PD	PU	PU	PU	PU
GPIO_12	DIO	PU	PU	PD	PD	PD
GPIO_13	DIO	PD	PU	PU	PU	PU
GPIO_14	DIO	PD	PD	PU	PD	PD

7.5 I/O Pin Mux Table

Table 10 shows the pin description for Type 2JM modules.

Table 10: GPIO Mux Table

GPIO	QSPI	SPI	I2C	UART	BT	PTA	32kHz Sleep Clock
GPIO_0		SPI_CLK					
GPIO_1		SPI_CS#		UART_RX			
GPIO_2		SPI_MOSI					
GPIO_3		SPI_MISO		UART_TX			
GPIO_4	QSPI_CLK						
GPIO_5 (AON)	QSPI_CS#						
GPIO_6	QSPI_D0						
GPIO_7	QSPI_D1						
GPIO_8		SPI_INT				BT_PRIORITY	32k_IN
GPIO_9 (AON)			SDA	UART_TX			
GPIO_10			SCL	UART_RX			
GPIO_11	QSPI_D2			UART_TX			
GPIO_12	QSPI_D3			UART_RX			
GPIO_13				UART_TX	WSI_CLK_BT	BT_ACTIVE	
GPIO_14				UART_RX	WSI_DATA_BT	WL_ACTIVE	

Downloaded from Arrow.com.

8 Absolute Maximum Ratings

The absolute maximum ratings are shown in **Table 11.**

Table 11: Absolute Maximum Ratings

Parameter		Minimum	Maximum	Unit
Storage Temperature		-40	85	°C
Supply Voltage	VBAT	-0.3	4.0	V
	1V8	-0.3	1.98	V
	VIO		3.6	V
Maximum RF input at RFIO			10	dBm

Stresses in excess of the absolute ratings may cause permanent damage. Functional operation is not implied under these conditions. Exposure to absolute ratings for extended periods of time may adversely affect reliability. No damage assuming only one parameter is set at limit at a time with all other parameters are set within operating condition.

9 Operating Conditions

9.1 Operating Conditions

The operating conditions are shown in **Table 12**.

Table 12: Operating Conditions

Parameter		Minimum	Typical	Maximum	Unit
Operating Temperature	Ta	-20	25	+85	°C
	Tj	-	-	+125	°C
Supply Voltage	VBAT	2.6	3.3	3.6	V
	1V8	1.71	1.8	1.89	V
	VIO (1.8V)	-0.3	1.8	2.1	V
	VIO (3.3V)	-0.3	3.3	3.6	V

- Operation beyond the recommended operating conditions is neither recommended nor guaranteed.

Downloaded from Arrow.com.

9.2 Digital I/O Requirements

Table 13 and **Table 14** shows the digital I/O requirements.

Table 13: Digital I/O Requirements Parameters (3.3V I/O operation)

Parameter	Description	Condition	Minimum	Typical	Maximum	Unit
V_{IH}	High-level input voltage	-	2.40	–	3.6	V
V_{IL}	Low-level input voltage	-	-0.3	–	0.8	V
V_{OH}	High-level output voltage	-	2.4	–	3.6	V
V_{OL}	Low-level output voltage	-	–	–	0.4	V
I_{IH}	High-level input current	Rpd: ON	–	–	10	µA
		Rpd: OFF	–	–	0.1	µA
I_{IL}	Low-level input current	Rpd: ON	–	–	10	µA
		Rpd: OFF	–	–	0.1	µA

Table 14: Digital I/O Requirements Parameters (1.8V I/O operation)

Parameter	Description	Condition	Minimum	Typical	Maximum	Unit
V_{IH}	High-level input voltage	-	1.17	–	2.1	V
V_{IL}	Low-level input voltage	-	-0.3	–	0.63	V
V_{OH}	High-level output voltage	-	1.35	–	–	V
V_{OL}	Low-level output voltage	-	–	–	0.45	V
I_{IH}	High-level input current	Rpd: ON	–	–	10	µA
		Rpd: OFF	–	–	0.1	µA
I_{IL}	Low-level input current	Rpd: ON	–	–	10	µA
		Rpd: OFF	–	–	0.1	µA

Downloaded from Arrow.com.

9.3 Sleep clock conditions

Figure 5 and **Table 15** shows the requirements of external sleep clock. This external clock is optional because QCC730 chipset has internal RTC.

Figure 5: External 32.768 kHz sleep clock timing

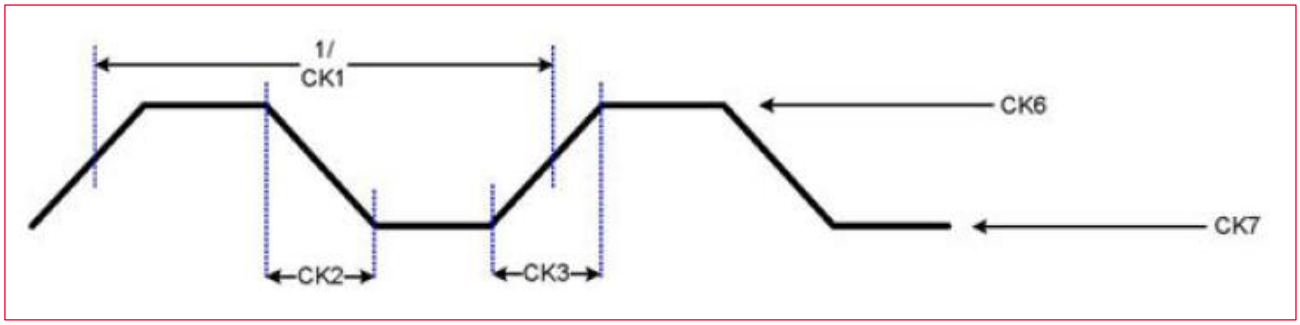

Table 15: External Sleep Clock Requirements Parameters

Parameter	Description	Min	Typ	Max	Unit
CK1	Clock rate	–	32.768	–	kHz
CK2	Fall time	1	–	100	ns
CK3	Rise time	1	–	100	ns
CK4	Duty cycle (high to low ratio)	15	–	85	%
CK5	Frequency stability	-200	–	200	PPM
CK6	Input high voltage	0.8 * VIO	–	VIO	V
CK7	Input low voltage	-0.3	–	VIO	V

Power up VIO before the external sleep clock is required.

Downloaded from Arrow.com.

9.4 Power modes

Table 15 shows internal state in each sleep mode.

Table 16: Sleep modes

Power Mode	CPU	Memory	RTC	Wakeup Source	Description	Use Case
Active	On	On	On	N/A	Normal operation	Awake
Sleep	Off	Retained	Off	DTIM timer	• Enter When RTOS is idle, and WLAN is connected* • Maintain WLAN connection • When awake, continue to run from sleep point	WLAN DTIM
Deep Sleep	Off	Off	Off	RTC timer or EXT_WAKEUP_INTR_N	• Enter when RTOS is idle, and WLAN is disconnected* • Nothing maintained • When awake, restart from PBL	Alarm or Shutdown
Indefinite Sleep	Off	Off	Off	EXT_WAKEUP_INTR_N	Same as Deep Sleep, except not waked up by RTC timer	Shutdown

Actual entering condition is complicated, such as considering sleep interval.

Downloaded from Arrow.com.

9.5 Package Thermal Conditions

- RΨjt : 12.845 ℃/W
- RΨjt = (Tj - Tt)/P

Tj: Junction temperature (℃), Tt: Top temperature (℃), P: Total Power Consumption (W)

Figure 6: Package Thermal Conditions

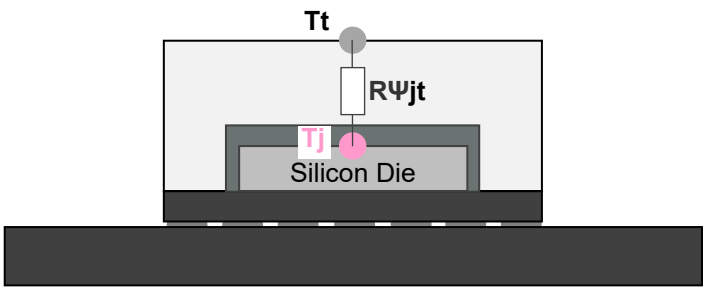

Downloaded from Arrow.com.

10 Power Sequence

This section describes the power-on and power-off sequences along with their parameters.

Figure 7 shows the Power on sequence. The CHIP_ON is the chip power on pin and all supplies should be stable for a minimum of 1.8 ms before CHIP_ON is asserted (that is. Is greater than V_{IL} for VIO).

Figure 7: Power on and Power off Sequence

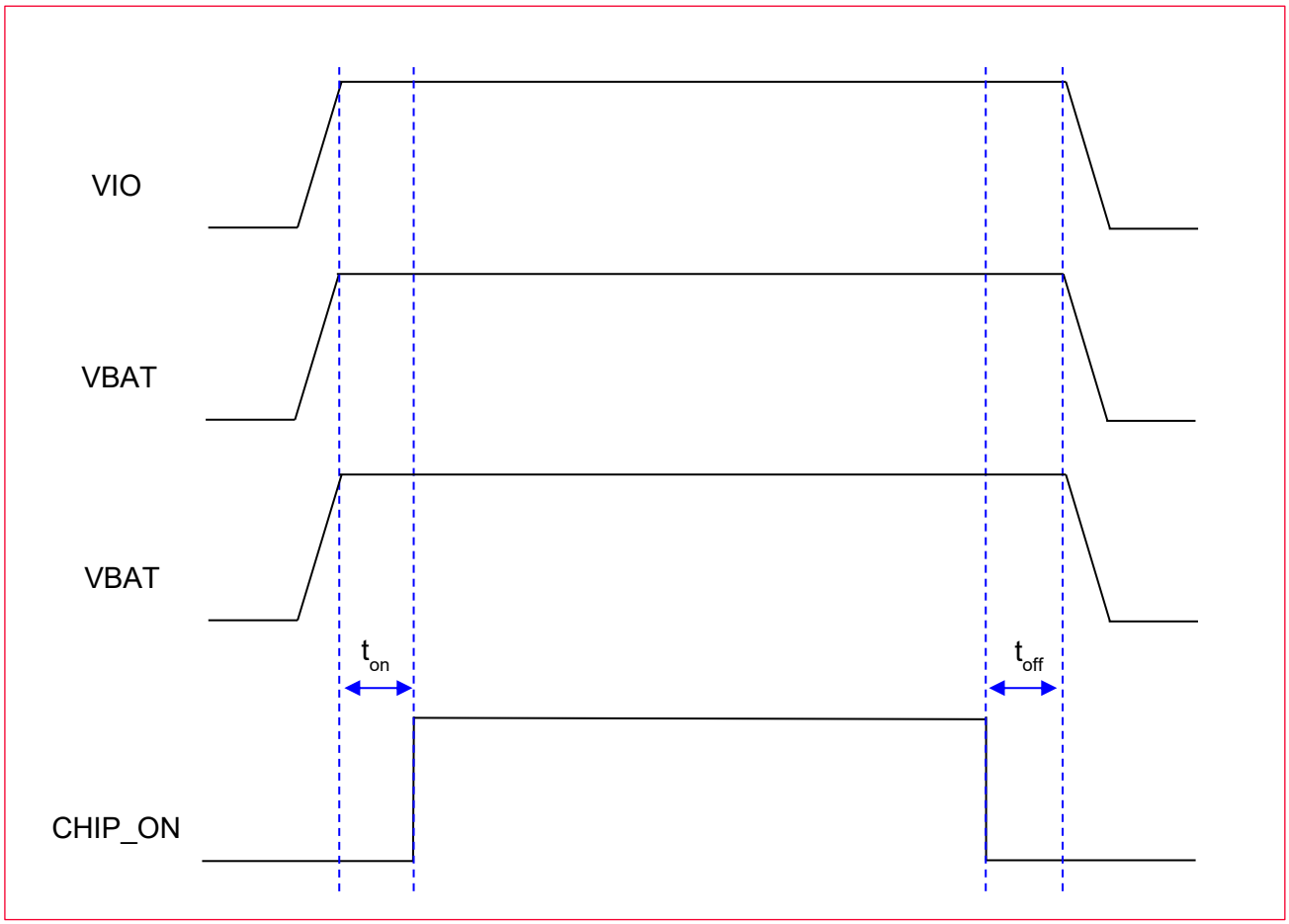

CHIP_ON should be open. CHIP_ON is generated by VBAT+RC delay in Host-less mode.

Downloaded from Arrow.com.

11 DC / RF Characteristics

11.1 DC/RF Characteristics for IEEE 802.11b - 2.4 GHz

Table 17: Characteristics Values for IEEE 802.11b - 2.4 GHz

Items	Contents
Specification	IEEE 802.11b
Mode	DSSS / CCK
Channel Frequency	2412 to 2472 MHz
Data Rate	1, 2, 5.5, 11 Mbps

Short preamble is not supported in 1, 2, 5.5 Mbps mode. Please do not set “4”, “5” and “6” if fixed data rate mode is used by SetRate command.

11.1.1 High-Rate Condition for IEEE 802.11b - 2.4 GHz

Conditions: 25 °C, VBAT = 3.3V, VIO = 1.8V, Output power setting = 7.5 dBm at module pad, 11 Mbps mode

Table 18: High-Rate Condition for IEEE 802.11b - 2.4 GHz

Items		Contents			
DC Characteristics		**Minimum**	**Typical**	**Maximum**	**Unit**
DC Current					
• Tx mode	1.8V		55	90	mA
	3.3V		11	20	mA
• Rx mode	1.8V		0.2	1	mA
	3.3V		3.5	10	mA
Tx Characteristics		**Minimum**	**Target setting**	**Maximum**	**Unit**
Output Power		5.0	7.5	11.0	dBm
Spectrum Mask Margin					
• 1st side lobes		0			dB
• 2nd side lobes		0			dB
Power-on/off ramp				2.0	µs
RF Carrier Suppression		15			dB
Modulation Accuracy				35	%
Frequency Tolerance		-20		20	ppm
Spurious Emissions					
• 30 - 47 MHz (BW = 100 kHz)				-36	dBm
• 47 - 74 MHz (BW = 100 kHz)				-54	dBm
• 74 - 87.5 MHz (BW = 100 kHz)				-36	dBm
• 87.5 - 118 MHz (BW = 100 kHz)				-54	dBm
• 118 - 174 MHz (BW = 100 kHz)				-36	dBm
• 174 - 230 MHz (BW = 100 kHz)				-54	dBm
• 230 - 470 MHz (BW = 100 kHz)				-36	dBm
• 470 - 862 MHz (BW = 100 kHz)				-54	dBm

Downloaded from Arrow.com.

Items	Contents			
• 862 - 1000 MHz (BW = 100 kHz)			-36	dBm
• 1000 - 12750 MHz (BW = 1 MHz)			-30	dBm
Rx Characteristics	**Minimum**	**Typical**	**Maximum**	**Unit**
Minimum Input Level (FER ≤ 8%)			-76	dBm
Maximum Input Level (FER ≤ 8%)	-10			dBm
Adjacent Channel Rejection (FER < 8%)	35			dB

11.1.2 Low-Rate Condition for IEEE 802.11b - 2.4 GHz

Conditions: 25 °C, VBAT = 3.3V, VIO = 1.8V, Output power setting = 7.5 dBm at module pad, 1 Mbps mode

Table 19: Low-Rate Condition for IEEE 802.11b - 2.4 GHz

Items		Contents			
DC Characteristics		**Minimum**	**Typical**	**Maximum**	**Unit**
DC Current					
• Tx mode	1.8V		55	90	mA
	3.3V		11	20	mA
• Rx mode	1.8V		0.2	1	mA
	3.3V		3.5	10	mA
Tx Characteristics		**Minimum**	**Target setting**	**Maximum**	**Unit**
Output Power		5.0	7.5	11.0	dBm
Spectrum Mask Margin					
• 1st side lobes		0			dB
• 2nd side lobes		0			dB
Power-on/off ramp				2.0	µs
RF Carrier Suppression		15			dB
Modulation Accuracy				35	%
Frequency Tolerance		-20		20	ppm
Spurious Emissions					
• 30 - 47 MHz (BW = 100 kHz)				-36	dBm
• 47 - 74 MHz (BW = 100 kHz)				-54	dBm
• 74 - 87.5 MHz (BW = 100 kHz)				-36	dBm
• 87.5 - 118 MHz (BW = 100 kHz)				-54	dBm
• 118 - 174 MHz (BW = 100 kHz)				-36	dBm
• 174 - 230 MHz (BW = 100 kHz)				-54	dBm
• 230 - 470 MHz (BW = 100 kHz)				-36	dBm
• 470 - 862 MHz (BW = 100 kHz)				-54	dBm
• 862 - 1000 MHz (BW = 100 kHz)				-36	dBm
• 1000 - 12750 MHz (BW = 1 MHz)				-30	dBm
Rx Characteristics		**Minimum**	**Typical**	**Maximum**	**Unit**
Minimum Input Level (FER ≤ 8%)				-80	dBm
Maximum Input Level (FER ≤ 8%)		-4			dBm
Adjacent Channel Rejection (FER < 8%)		35			dB

Downloaded from Arrow.com.

11.2 DC/RF Characteristics for IEEE 802.11g - 2.4 GHz

Table 20: Characteristics Values for IEEE 802.11g - 2.4 GHz

Items	Contents
Specification	IEEE 802.11g
Mode	OFDM
Channel Frequency	2412 to 2472 MHz
Data Rate	6, 9, 12, 18, 24 Mbps

11.2.1 High-Rate Condition for IEEE 802.11g - 2.4 GHz

Conditions: 25 °C, VBAT = 3.3V, VIO = 1.8V, Output power setting = 8.0 dBm at module pad, 24 Mbps mode

Table 21: High-Rate Condition for IEEE 802.11g - 2.4 GHz

Items		Contents			
DC Characteristics		**Minimum**	**Typical**	**Maximum**	**Unit**
DC Current					
• Tx mode	1.8V		53	90	mA
	3.3V		12	20	mA
• Rx mode	1.8V		0.2	1	mA
	3.3V		4	10	mA
Tx Characteristics		**Minimum**	**Target setting**	**Maximum**	**Unit**
Output Power		6.0	8.0	10.0	dBm
Spectrum Mask Margin					
• 9 MHz to 11 MHz (0 ~ -20 dBr)		0			dB
• 11 MHz to 20 MHz (-20 ~ -28 dBr)		0			dB
• 20 MHz to 30 MHz (-28 ~ -40 dBr)		0			dB
• 30 MHz to 33 MHz (-40 dBr)		0			dB
Constellation Error (EVM)				-16	dB
Frequency Tolerance		-20		20	ppm
Spurious Emissions					
• 30 - 47 MHz (BW = 100 kHz)				-36	dBm
• 47 - 74 MHz (BW = 100 kHz)				-54	dBm
• 74 - 87.5 MHz (BW = 100 kHz)				-36	dBm
• 87.5 - 118 MHz (BW = 100 kHz)				-54	dBm
• 118 - 174 MHz (BW = 100 kHz)				-36	dBm
• 174 - 230 MHz (BW = 100 kHz)				-54	dBm
• 230 - 470 MHz (BW = 100 kHz)				-36	dBm
• 470 - 862 MHz (BW = 100 kHz)				-54	dBm
• 862 - 1000 MHz (BW = 100 kHz)				-36	dBm
• 1000 - 12750 MHz (BW = 1 MHz)				-30	dBm
Rx Characteristics		**Minimum**	**Typical**	**Maximum**	**Unit**
Minimum Input Level (PER < 10%)				-74	dBm
Maximum Input Level (PER < 10%)		-20			dBm
Adjacent Channel Rejection (PER < 10%)		8			dB

Downloaded from Arrow.com.

11.2.2 Low-Rate Condition for IEEE 802.11g - 2.4 GHz

Conditions: 25 °C, VBAT = 3.3V, VIO = 1.8V, Output power setting = 9.5 dBm at module pad, 6 Mbps mode

Table 22: Low-Rate Condition for IEEE 802.11g - 2.4 GHz

Items		Contents			
DC Characteristics		**Minimum**	**Typical**	**Maximum**	**Unit**
DC Current					
• Tx mode	1.8V		55	90	mA
	3.3V		12	20	mA
• Rx mode	1.8V		0.2	1	mA
	3.3V		4	10	mA
Tx Characteristics		**Minimum**	**Target setting**	**Maximum**	**Unit**
Output Power		7.5	9.5	11.5	dBm
Spectrum Mask Margin					
• 9 MHz to 11 MHz (0 ~ -20 dBr)		0			dB
• 11 MHz to 20 MHz (-20 ~ -28 dBr)		0			dB
• 20 MHz to 30 MHz (-28 ~ -40 dBr)		0			dB
• 30 MHz to 33 MHz (-40 dBr)		0			dB
Constellation Error (EVM)				-5	dB
Frequency Tolerance		-20		20	ppm
Spurious Emissions					
• 30 - 47 MHz (BW = 100 kHz)				-36	dBm
• 47 - 74 MHz (BW = 100 kHz)				-54	dBm
• 74 - 87.5 MHz (BW = 100 kHz)				-36	dBm
• 87.5 - 118 MHz (BW = 100 kHz)				-54	dBm
• 118 - 174 MHz (BW = 100 kHz)				-36	dBm
• 174 - 230 MHz (BW = 100 kHz)				-54	dBm
• 230 - 470 MHz (BW = 100 kHz)				-36	dBm
• 470 - 862 MHz (BW = 100 kHz)				-54	dBm
• 862 - 1000 MHz (BW = 100 kHz)				-36	dBm
• 1000 - 12750 MHz (BW = 1 MHz)				-30	dBm
Rx Characteristics		**Minimum**	**Typical**	**Maximum**	**Unit**
Minimum Input Level (PER < 10%)				-82	dBm
Maximum Input Level (PER < 10%)		-20			dBm
Adjacent Channel Rejection (PER < 10%)		16			dB

Downloaded from Arrow.com.

11.3 DC/RF Characteristics for IEEE 802.11n (HT20) - 2.4 GHz

Table 23: Characteristics Values for IEEE 802.11n (HT20) - 2.4 GHz

Items	Contents
Specification	IEEE 802.11n 20 MHz BW
Mode	OFDM
Channel Frequency	2412 to 2472 MHz
Data Rate	MCS0-MCS3

11.3.1 High-Rate Condition for IEEE 802.11n (HT20) - 2.4 GHz

Conditions: 25 °C, VBAT = 3.3V, VIO = 1.8V, Output power setting = 8.0 dBm at module pad, MCS3 mode

Table 24: High-Rate Condition for IEEE 802.11n (HT20) - 2.4 GHz

Items		Contents			
DC Characteristics		**Minimum**	**Typical**	**Maximum**	**Unit**
DC Current					
• Tx mode	1.8V		54	90	mA
	3.3V		12	20	mA
• Rx mode	1.8V		0.2	1	mA
	3.3V		4	10	mA
Tx Characteristics		**Minimum**	**Target setting**	**Maximum**	**Unit**
Output Power		6.0	8.0	10.0	dBm
Spectrum Mask Margin					
• 9 MHz to 11 MHz (0 ~ -20 dBr)		0			dB
• 11 MHz to 20 MHz (-20 ~ -28 dBr)		0			dB
• 20 MHz to 30 MHz (-28 ~ -45 dBr)		0			dB
• 30 MHz to 33 MHz (-45 dBr)		0			dB
Constellation Error (EVM) (measured at enhanced mode)				-16	dB
Frequency Tolerance		-20		20	ppm
Spurious Emissions					
• 30 - 47 MHz (BW = 100 kHz)				-36	dBm
• 47 - 74 MHz (BW = 100 kHz)				-54	dBm
• 74 - 87.5 MHz (BW = 100 kHz)				-36	dBm
• 87.5 - 118 MHz (BW = 100 kHz)				-54	dBm
• 118 - 174 MHz (BW = 100 kHz)				-36	dBm
• 174 - 230 MHz (BW = 100 kHz)				-54	dBm
• 230 - 470 MHz (BW = 100 kHz)				-36	dBm
• 470 - 862 MHz (BW = 100 kHz)				-54	dBm
• 862 - 1000 MHz (BW = 100 kHz)				-36	dBm
• 1000 - 12750 MHz (BW = 1 MHz)				-30	dBm
Rx Characteristics		**Minimum**	**Typical**	**Maximum**	**Unit**
Minimum Input Level (PER ≤ 10%)				-74	dBm
Maximum Input Level (PER < 10%)		-20			dBm
Adjacent Channel Rejection (PER ≤ 10%)		8			dB

Downloaded from Arrow.com.

11.3.2 Low-Rate Condition for IEEE 802.11n (HT20) - 2.4 GHz

Conditions: 25 °C, VBAT = 3.3V, VIO = 1.8V, Output power setting = 9.5 dBm at module pad, MCS0 mode

Table 25: Low-Rate Condition for IEEE 802.11n (HT20) - 2.4 GHz

Items		Contents			
DC Characteristics		**Minimum**	**Typical**	**Maximum**	**Unit**
DC Current					
• Tx mode	1.8V		56	90	mA
	3.3V		12	20	mA
• Rx mode	1.8V		0.2	1	mA
	3.3V		4	10	mA
Tx Characteristics		**Minimum**	**Target setting**	**Maximum**	**Unit**
Output Power		7.5	9.5	11.5	dBm
Spectrum Mask Margin					
• 9 MHz to 11 MHz (0 ~ -20 dBr)		0			dB
• 11 MHz to 20 MHz (-20 ~ -28 dBr)		0			dB
• 20 MHz to 30 MHz (-28 ~ -45 dBr)		0			dB
• 30 MHz to 33 MHz (-45 dBr)		0			dB
4. Constellation Error (EVM) (measured at enhanced mode)				-5	dB
Frequency Tolerance		-20		20	ppm
Spurious Emissions					
• 30 - 47 MHz (BW = 100 kHz)				-36	dBm
• 47 - 74 MHz (BW = 100 kHz)				-54	dBm
• 74 - 87.5 MHz (BW = 100 kHz)				-36	dBm
• 87.5 - 118 MHz (BW = 100 kHz)				-54	dBm
• 118 - 174 MHz (BW = 100 kHz)				-36	dBm
• 174 - 230 MHz (BW = 100 kHz)				-54	dBm
• 230 - 470 MHz (BW = 100 kHz)				-36	dBm
• 470 - 862 MHz (BW = 100 kHz)				-54	dBm
• 862 - 1000 MHz (BW = 100 kHz)				-36	dBm
• 1000 - 12750 MHz (BW = 1 MHz)				-30	dBm
Rx Characteristics		**Minimum**	**Typical**	**Maximum**	**Unit**
Minimum Input Level (PER ≤ 10%)				-82	dBm
Maximum Input Level (PER < 10%)		-20			dBm
Adjacent Channel Rejection (PER ≤ 10%)		16			dB

Downloaded from Arrow.com.

11.4 DC/RF Characteristics for IEEE 802.11a - 5 GHz

Table 26: Characteristics Values for IEEE 802.11a - 5 GHz

Items	Contents
Specification	IEEE 802.11a
Mode	OFDM
Channel Frequency	5180 to 5240 MHz, 5260 to 5320 MHz, 5500 to 5720 MHz, 5745 to 5825 MHz
Data Rate	6, 9, 12, 18, 24 Mbps

11.4.1 High-Rate Condition for IEEE 802.11a - 5 GHz

Conditions: 25 °C, VBAT = 3.3V, VIO = 1.8V, Output power setting = 6.5 dBm at module pad, 24 Mbps mode

Table 27: High-Rate Condition for IEEE 802.11a - 5 GHz

Items		Contents			
DC Characteristics		**Minimum**	**Typical**	**Maximum**	**Unit**
DC Current					
• Tx mode	1.8V		53	90	mA
	3.3V		14	20	mA
• Rx mode	1.8V		0.2	1	mA
	3.3V		5	10	mA
Tx Characteristics		**Minimum**	**Target setting**	**Maximum**	**Unit**
Output Power		4.5	6.5	8.5	dBm
Spectrum Mask Margin					
• 9 MHz to 11 MHz (0 ~ -20 dBr)		0			dB
• 11 MHz to 20 MHz (-20 ~ -28 dBr)		0			dB
• 20 MHz to 30 MHz (-28 ~ -40 dBr)		0			dB
• 30 MHz to 33 MHz (-40 dBr)		0			dB
Constellation Error (EVM) (measured at enhanced mode)				-16	dB
Frequency Tolerance		-20		20	ppm
Spurious Emissions					
• 30 - 47 MHz (BW = 100 kHz)				-36	dBm
• 47 - 74 MHz (BW = 100 kHz)				-54	dBm
• 74 - 87.5 MHz (BW = 100 kHz)				-36	dBm
• 87.5 - 118 MHz (BW = 100 kHz)				-54	dBm
• 118 - 174 MHz (BW = 100 kHz)				-36	dBm
• 174 - 230 MHz (BW = 100 kHz)				-54	dBm
• 230 - 470 MHz (BW = 100 kHz)				-36	dBm
• 470 - 862 MHz (BW = 100 kHz)				-54	dBm
• 862 - 1000 MHz (BW = 100 kHz)				-36	dBm
• 1000 - 5150 MHz (BW = 1 MHz)				-30	dBm
• 5350 - 5470 MHz (BW = 1 MHz)				-30	dBm
• 5725 - 26000 MHz (BW = 1 MHz)				-30	dBm
Rx Characteristics		**Minimum**	**Typical**	**Maximum**	**Unit**
Minimum Input Level (PER ≤ 10%)				-74	dBm
Maximum Input Level (PER < 10%)		-30			dBm
Adjacent Channel Rejection (PER ≤ 10%)		8			dB

Downloaded from Arrow.com.

11.4.2 Low-Rate Condition for IEEE 802.11a - 5 GHz

Conditions: 25 °C, VBAT = 3.3V, VIO = 1.8V, Output power setting = 8.0 dBm at module pad, 6 Mbps mode

Table 28: Low-Rate Condition for IEEE 802.11a - 5 GHz

Items		Contents			
DC Characteristics		**Minimum**	**Typical**	**Maximum**	**Unit**
DC Current					
• Tx mode	1.8V		56	90	mA
	3.3V		14	20	mA
• Rx mode	1.8V		0.2	1	mA
	3.3V		5	10	mA
Tx Characteristics		**Minimum**	**Target setting**	**Maximum**	**Unit**
Output Power		6.0	8.0	10.0	dBm
Spectrum Mask Margin					
• 9 MHz to 11 MHz (0 ~ -20 dBr)		0			dB
• 11 MHz to 20 MHz (-20 ~ -28 dBr)		0			dB
• 20 MHz to 30 MHz (-28 ~ -40 dBr)		0			dB
• 30 MHz to 33 MHz (-40 dBr)		0			dB
Constellation Error (EVM) (measured at enhanced mode)				-5	dB
Frequency Tolerance		-20		-20	ppm
Spurious Emissions					
• 30 - 47 MHz (BW = 100 kHz)				-36	dBm
• 47 - 74 MHz (BW = 100 kHz)				-54	dBm
• 74 - 87.5 MHz (BW = 100 kHz)				-36	dBm
• 87.5 - 118 MHz (BW = 100 kHz)				-54	dBm
• 118 - 174 MHz (BW = 100 kHz)				-36	dBm
• 174 - 230 MHz (BW = 100 kHz)				-54	dBm
• 230 - 470 MHz (BW = 100 kHz)				-36	dBm
• 470 - 862 MHz (BW = 100 kHz)				-54	dBm
• 862 - 1000 MHz (BW = 100 kHz)				-36	dBm
• 1000 - 5150 MHz (BW = 1 MHz)				-30	dBm
• 5350 - 5470 MHz (BW = 1 MHz)				-30	dBm
• 5725 - 26000 MHz (BW = 1 MHz)				-30	dBm
Rx Characteristics		**Minimum**	**Typical**	**Maximum**	**Unit**
Minimum Input Level (PER ≤ 10%)				-82	dBm
Maximum Input Level (PER < 10%)		-30			dBm
Adjacent Channel Rejection (PER ≤ 10%)		16			dB

Downloaded from Arrow.com.

11.5 DC/RF Characteristics for IEEE 802.11n (HT20) - 5 GHz

Table 29: Characteristics Values for IEEE 802.11n (HT20) - 5 GHz

Items	Contents
Specification	IEEE 802.11n
Mode	OFDM
Channel Frequency	5180 to 5240 MHz, 5260 to 5320 MHz, 5500 to 5720 MHz, 5745 to 5825 MHz
Data Rate	MCS0-MCS3

11.5.1 High-Rate Condition for IEEE 802.11n (HT20) - 5 GHz

Conditions: 25 °C, VBAT = 3.3V, VIO = 1.8V, Output power setting = 6.5 dBm at module pad, MCS3 mode

Table 30: High-Rate Condition for IEEE 802.11n (HT20) - 5 GHz

Items		Contents			
DC Characteristics		**Minimum**	**Typical**	**Maximum**	**Unit**
DC Current					
• Tx mode	1.8V		53	90	mA
	3.3V		14	20	mA
• Rx mode	1.8V		0.2	1	mA
	3.3V		5	10	mA
Tx Characteristics		**Minimum**	**Target setting**	**Maximum**	**Unit**
Output Power		4.5	6.5	8.5	dBm
Spectrum Mask Margin					
• 9 MHz to 11 MHz (0 ~ -20 dBr)		0			dB
• 11 MHz to 20 MHz (-20 ~ -28 dBr)		0			dB
• 20 MHz to 30 MHz (-28 ~ -40 dBr)		0			dB
• 30 MHz to 33 MHz (-40 dBr)		0			dB
Constellation Error (EVM) (measured at enhanced mode)				-16	dB
Frequency Tolerance		-20		20	ppm
Spurious Emissions					
• 30 - 47 MHz (BW = 100 kHz)				-36	dBm
• 47 - 74 MHz (BW = 100 kHz)				-54	dBm
• 74 - 87.5 MHz (BW = 100 kHz)				-36	dBm
• 87.5 - 118 MHz (BW = 100 kHz)				-54	dBm
• 118 - 174 MHz (BW = 100 kHz)				-36	dBm
• 174 - 230 MHz (BW = 100 kHz)				-54	dBm
• 230 - 470 MHz (BW = 100 kHz)				-36	dBm
• 470 - 862 MHz (BW = 100 kHz)				-54	dBm
• 862 - 1000 MHz (BW = 100 kHz)				-36	dBm
• 1000 - 5150 MHz (BW = 1 MHz)				-30	dBm
• 5350 - 5470 MHz (BW = 1 MHz)				-30	dBm
• 5725 - 26000 MHz (BW = 1 MHz)				-30	dBm
Rx Characteristics		**Minimum**	**Typical**	**Maximum**	**Unit**
Minimum Input Level (PER ≤ 10%)				-74	dBm
Maximum Input Level (PER < 10%)		-30			dBm

Downloaded from Arrow.com.

Items	Contents			
Adjacent Channel Rejection (PER ≤ 10%)	8			dB

11.5.2 Low-Rate Condition for IEEE 802.11n (HT20) - 5 GHz

Conditions: 25 °C, VBAT = 3.3V, VIO = 1.8V, Output power setting = 8.0 dBm at module pad, MCS0 mode

Table 31: Low-Rate Condition for IEEE 802.11n (HT20) - 5 GHz

Items		Contents			
DC Characteristics		**Minimum**	**Typical**	**Maximum**	**Unit**
DC Current					
• Tx mode	1.8V		57	90	mA
	3.3V		14	20	mA
• Rx mode	1.8V		0.2	1	mA
	3.3V		5	10	mA
Tx Characteristics		**Minimum**	**Target setting**	**Maximum**	**Unit**
Output Power		6.0	8.0	10.0	dBm
Spectrum Mask Margin					
• 9 MHz to 11 MHz (0 ~ -20 dBr)		0			dB
• 11 MHz to 20 MHz (-20 ~ -28 dBr)		0			dB
• 20 MHz to 30 MHz (-28 ~ -40 dBr)		0			dB
• 30 MHz to 33 MHz (-40 dBr)		0			dB
Constellation Error (EVM) (measured at enhanced mode)				-5	dB
Frequency Tolerance		-20		20	ppm
Spurious Emissions					
• 30 - 47 MHz (BW = 100 kHz)				-36	dBm
• 47 - 74 MHz (BW = 100 kHz)				-54	dBm
• 74 - 87.5 MHz (BW = 100 kHz)				-36	dBm
• 87.5 - 118 MHz (BW = 100 kHz)				-54	dBm
• 118 - 174 MHz (BW = 100 kHz)				-36	dBm
• 174 - 230 MHz (BW = 100 kHz)				-54	dBm
• 230 - 470 MHz (BW = 100 kHz)				-36	dBm
• 470 - 862 MHz (BW = 100 kHz)				-54	dBm
• 862 - 1000 MHz (BW = 100 kHz)				-36	dBm
• 1000 - 5150 MHz (BW = 1 MHz)				-30	dBm
• 5350 - 5470 MHz (BW = 1 MHz)				-30	dBm
• 5725 - 26000 MHz (BW = 1 MHz)				-30	dBm
Rx Characteristics		**Minimum**	**Typical**	**Maximum**	**Unit**
Minimum Input Level (PER ≤ 10%)				-82	dBm
Maximum Input Level (PER < 10%)		-30			dBm
Adjacent Channel Rejection (PER ≤ 10%)		16			dB

Downloaded from Arrow.com.

12 Land Pattern

The land pattern is shown in **Figure 8.**

Figure 8: Land Pattern (TOP VIEW)

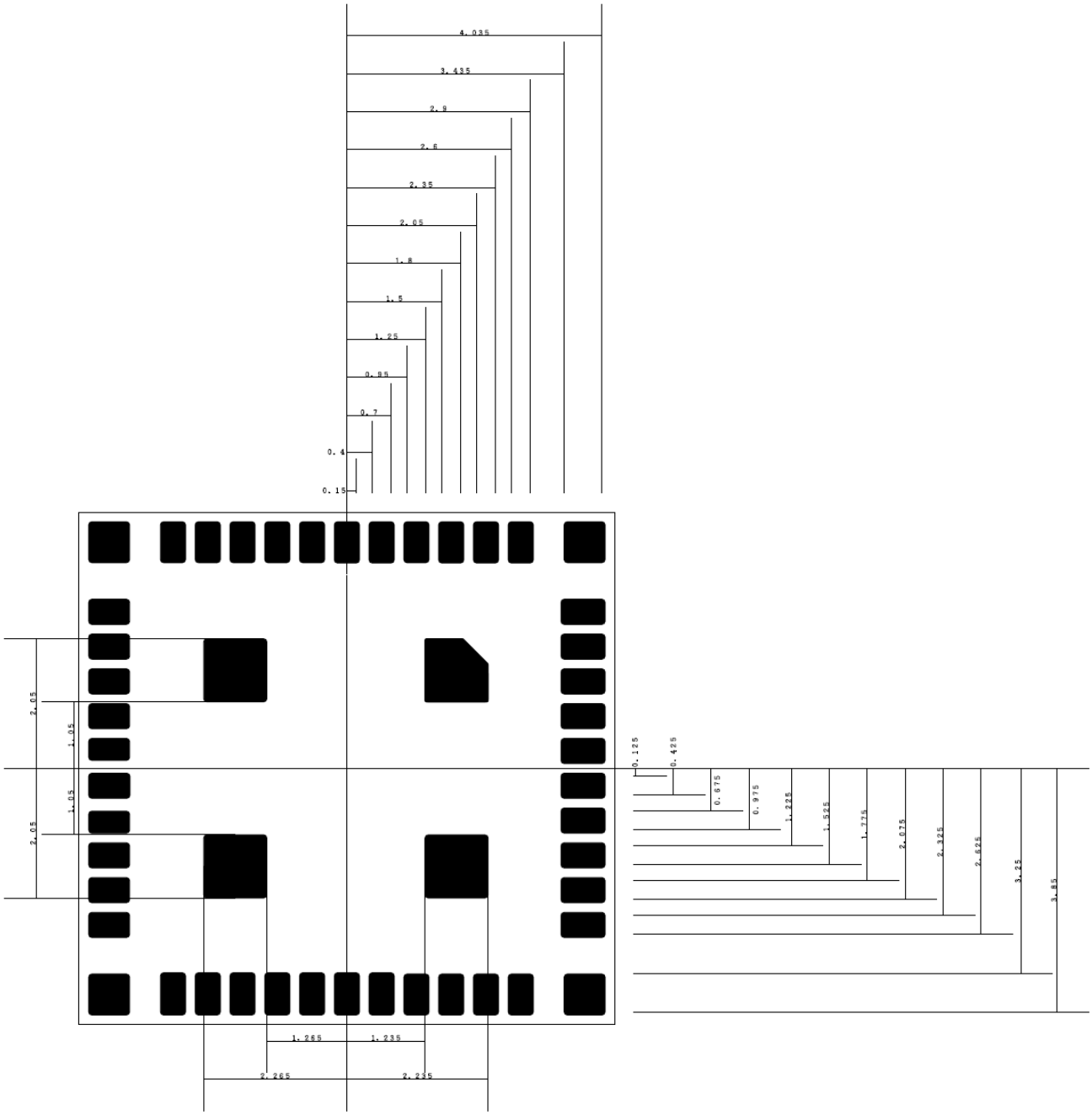

Downloaded from Arrow.com.

13 Tape and Reel Packing

This section contains the following topics:

- Dimensions of Tape (Plastic tape)
- Dimensions of Reel
- Taping Diagrams
- Leader and tail tape
- Packaging

13.1 Dimensions of Tape (Plastic Tape)

Figure 9 is a graphical representation of the tape dimension (plastic tape)[1].

Figure 9: Dimensions of Tape (Unit: mm)

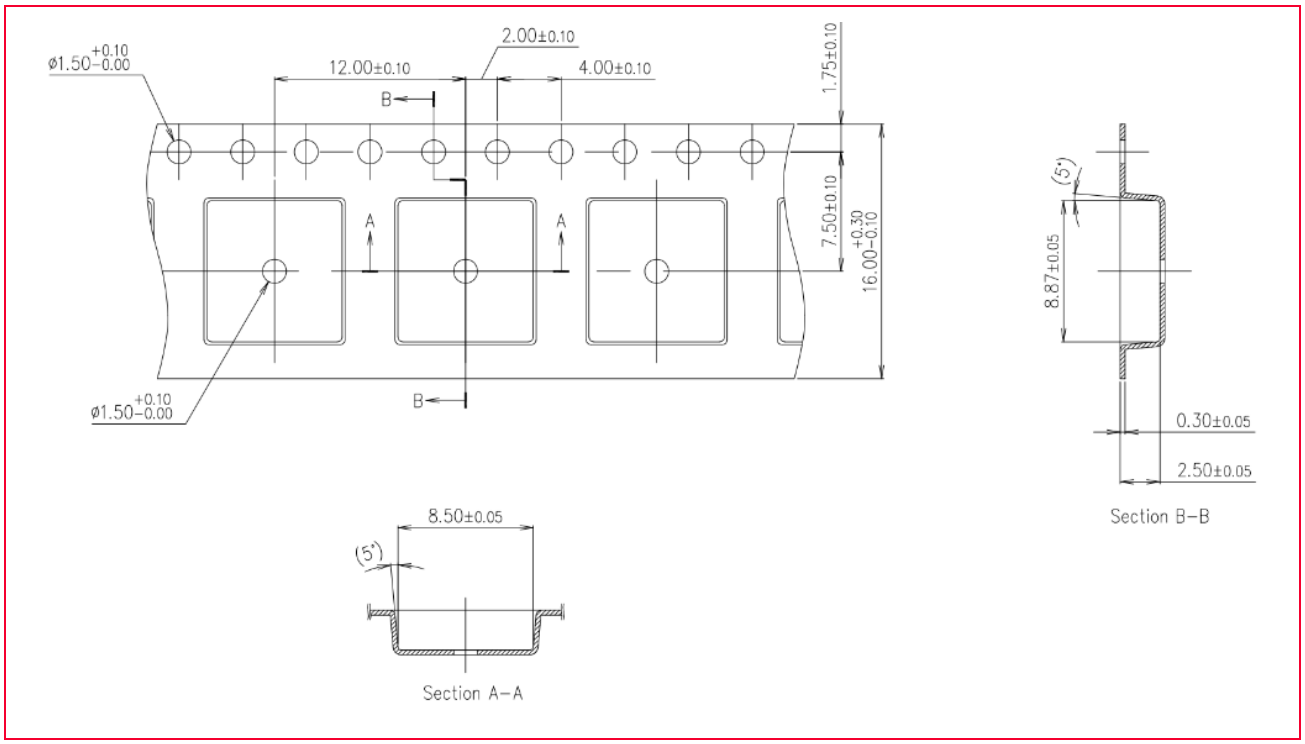

[1] Cumulative tolerance of max 40 +/-0.15 mm for every 10 pitches.

Downloaded from Arrow.com.

13.2 Dimension of Reel

Figure 10 shows the reel dimensions.

Figure 10: Dimensions of Reel (Unit: mm)

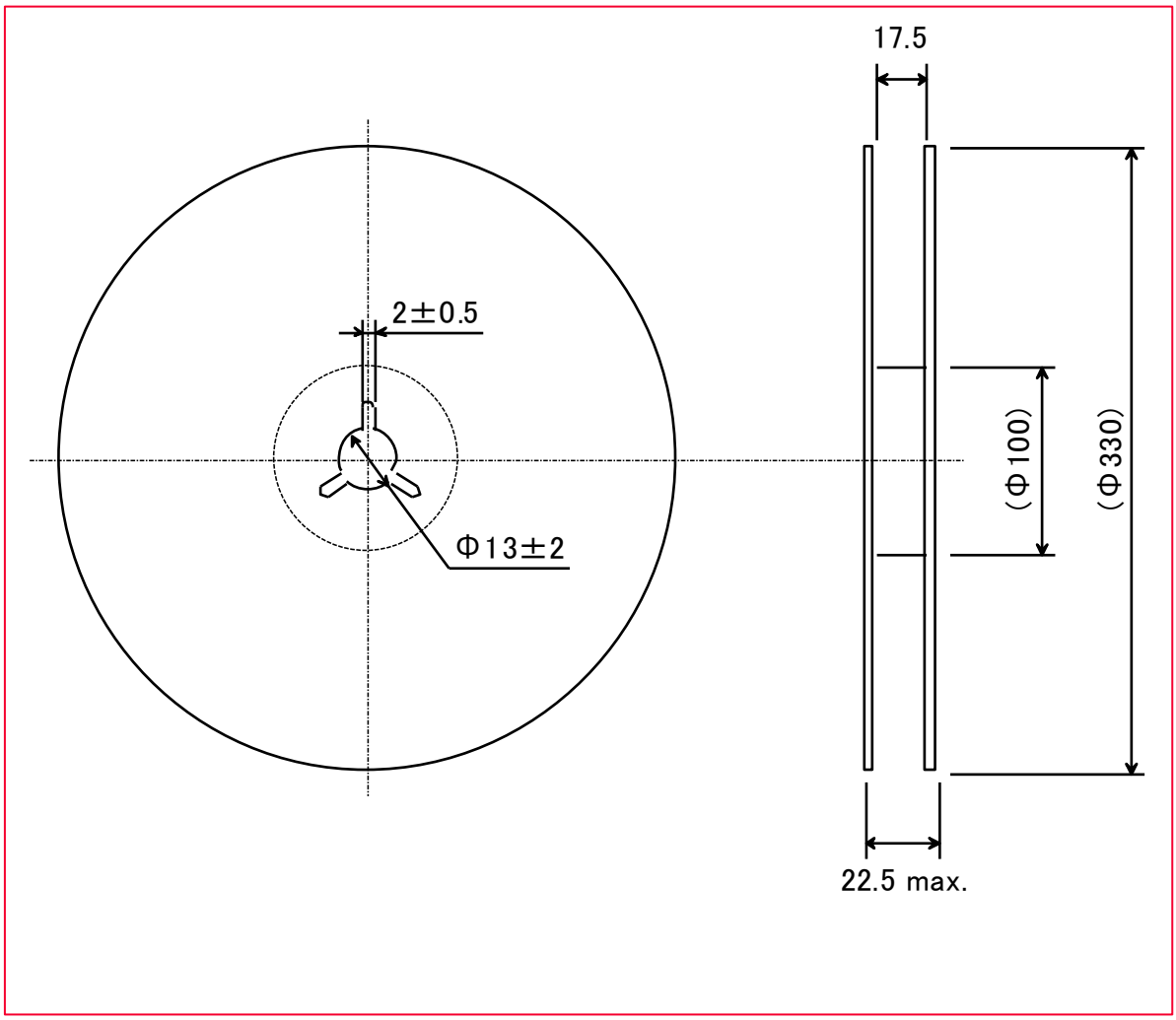

Downloaded from Arrow.com.

13.3 Taping Diagrams

Figure 11 and **Figure 12** shows the tapings diagrams.

Figure 11: Taping Diagrams

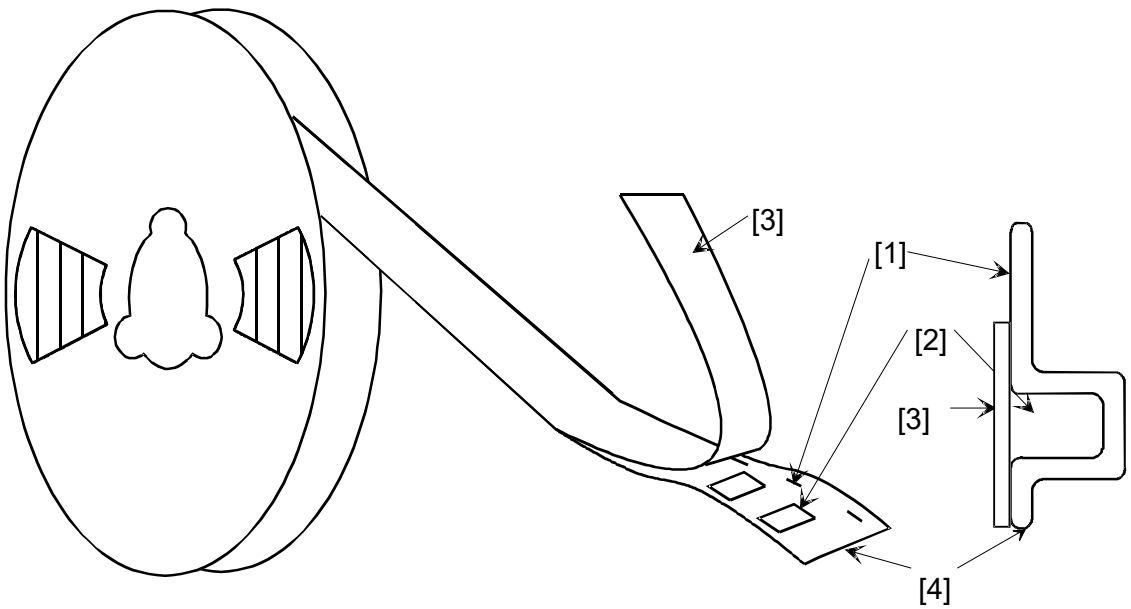

Table 32: Taping Specifications

Mark	Description
1	Feeding Hole. As specified in Dimensions of Tape (Plastic tape).
2	Hole for chip. As specified in Dimensions of Tape (Plastic tape).
3	Cover tape. 62 µm in thickness.
4	Base tape. As specified in Dimensions of Tape (Plastic tape).

Figure 12: Taping Diagrams (Close Up)

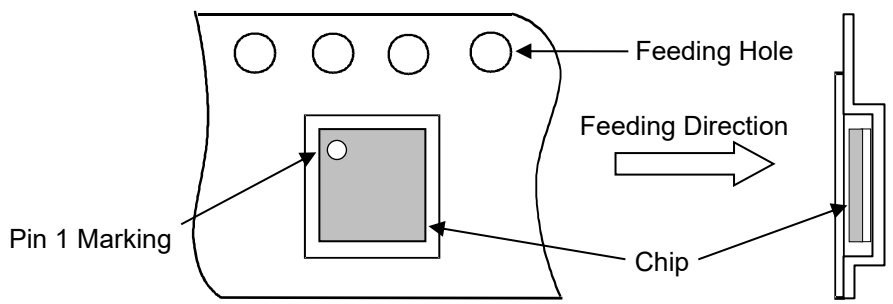

Downloaded from Arrow.com.

13.4 Leader and Tail Tape

The leader and tail tape are shown in **Figure 13.**

Figure 13: Leader and Tail Tape

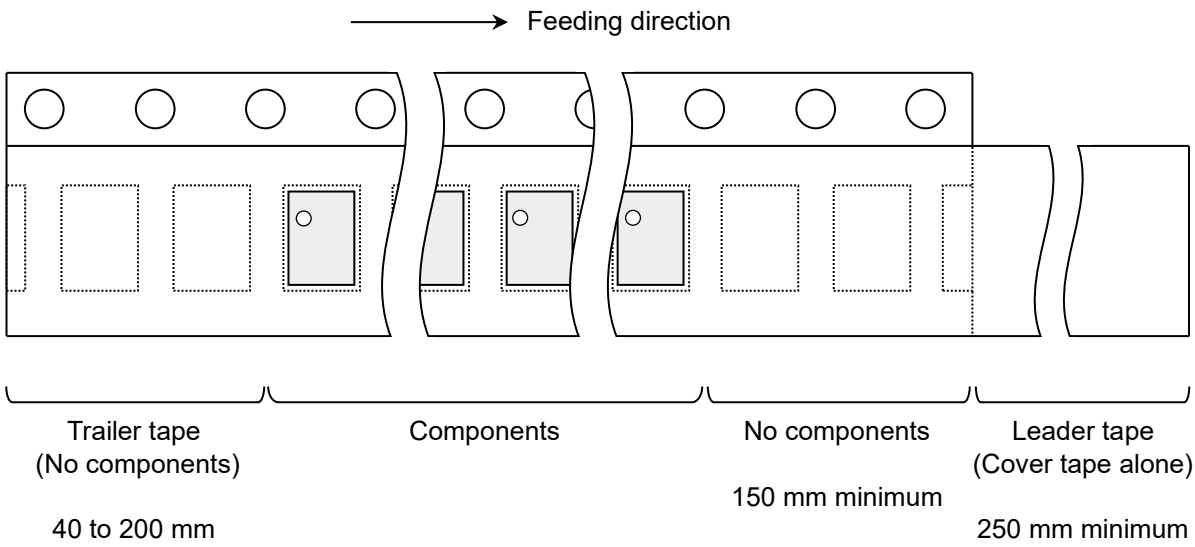

- The tape for chips is wound clockwise, the feeding holes to the right side as the tape is pulled toward the user.
- The cover tape and base tape are not adhered at no components area for 250 mm minimum.
- Tear off strength against pulling of cover tape: 5 N minimum.
- Packaging unit: 1000 pcs. / Reel
- Tape material:
  - Base tape: Plastic
  - Reel: Plastic
  - Cover tape, cavity tape and reel are made the anti-static processing.
- Peeling off force: 1.1 N maximum in the direction of peeling as shown in **Figure 14**.

Figure 14: Peeling Force

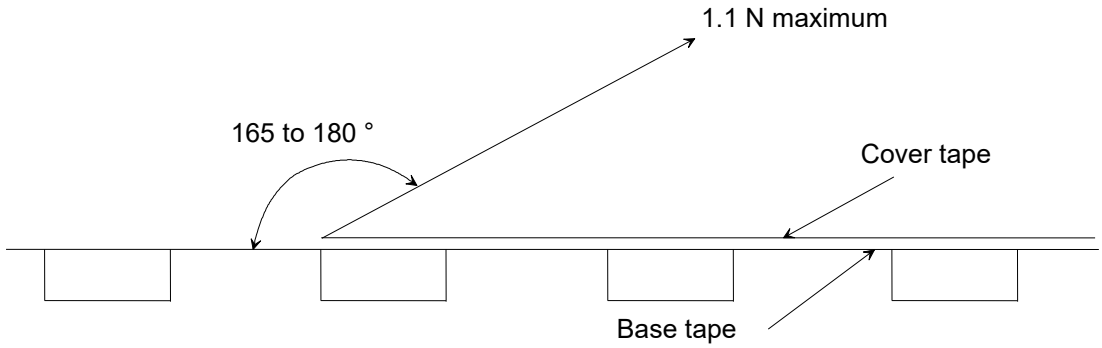

Downloaded from Arrow.com.

13.5 Packaging (Humidity Proof Packing)

Figure 15 shows the humidity proof Packaging.

Figure 15: Humidity Proof Packaging

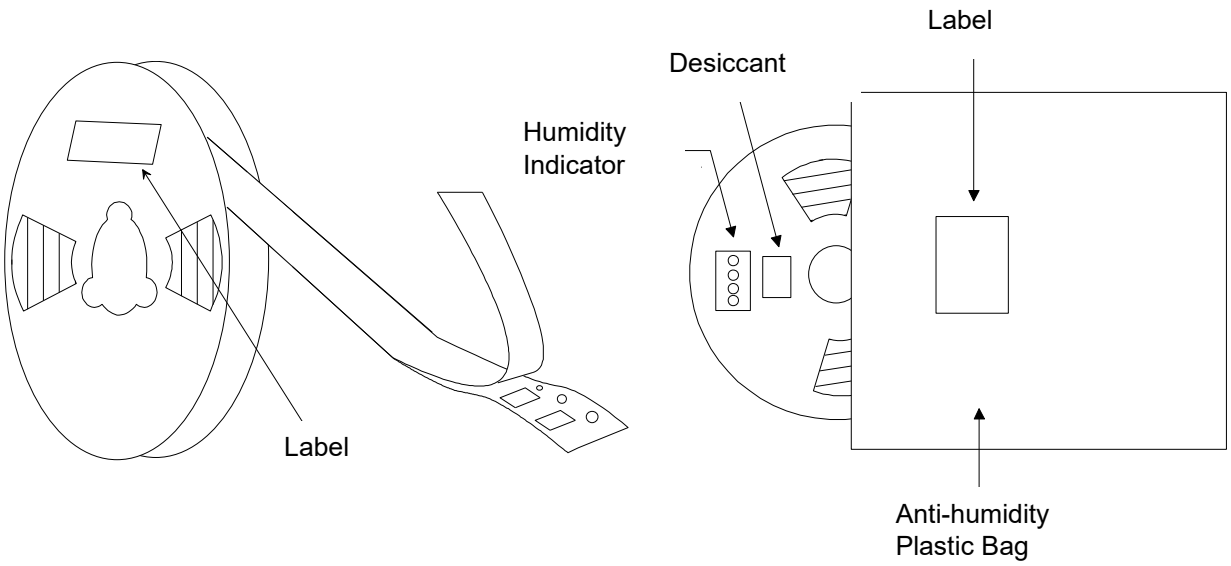

Tape and reel must be sealed with the anti-humidity plastic bag. The bag contains the desiccant and the humidity indicator.

Downloaded from Arrow.com.

14 Notice

14.1 Storage Conditions

- Please use this product within 6 months after receipt.
  - The product shall be stored without opening the packing under the ambient temperature from 5 to 35 °C and humidity from 20 ~ 70 %RH (Packing materials may be deformed at the temperature over 40 °C).
  - The product left more than 6 months after reception; the solderability needs to be confirmed before it is used.
  - The product shall be stored in non-corrosive gas (Cl_2, NH_3, SO_2, NO_X, etc.).
  - Any excess mechanical shock including, but not limited to, sticking the packing materials by sharp object, and dropping the product, shall not be applied in order not to damage the packing materials.
- This product is applicable to MSL3 (Based on IPC/JEDEC J-STD-020)
  - After the packing opened, the product shall be stored at <30 °C / <60 %RH and the product shall be used within 168 hours.
  - When the color of the indicator in the packing changed, the product shall be baked before soldering.
- Baking condition**:** 125 +5/-0 °C, 24 hours, 1 time
- The products shall be baked on the heat-resistant tray because the material (Base Tape, Reel Tape and Cover Tape) is not heat-resistant.

14.2 Handling Conditions

- Be careful in handling or transporting products because excessive stress or mechanical shock may break products.
- Handle with care if products may have cracks or damages on their terminals, the characteristics of products may change. Do not touch products with bare hands that may result in poor solder ability and destroy by static electrical charge.

14.3 Standard PCB Design (Land Pattern and Dimensions)

- All the ground terminals should be connected to the ground patterns. Furthermore, the ground pattern should be provided between IN and OUT terminals. Please refer to the specifications for the standard land dimensions.
- The recommended land pattern and dimensions is as Murata's standard. The characteristics of products may vary depending on the pattern drawing method, grounding method, land dimensions, land forming method of the NC terminals and the PCB material and thickness. Therefore, be sure to verify the characteristics in the actual set. When using non-standard lands, contact Murata beforehand.

Downloaded from Arrow.com.

14.4 Notice for Chip Placer

When placing products on the PCB, products may be stressed and broken by uneven forces from a worn-out chucking locating claw or a suction nozzle. To prevent products from damages, be sure to follow the specifications for the maintenance of the chip placer being used. For the positioning of products on the PCB, be aware that mechanical chucking may damage products.

14.5 Soldering Conditions

The recommendation conditions of soldering are shown in **Figure 16**.

Soldering must be carried out by the above-mentioned conditions to prevent products from damage. Set up the highest temperature of reflow within 260 °C. Contact Murata before use if concerning other soldering conditions.

Figure 16: Reflow Soldering Standard Conditions (Example)

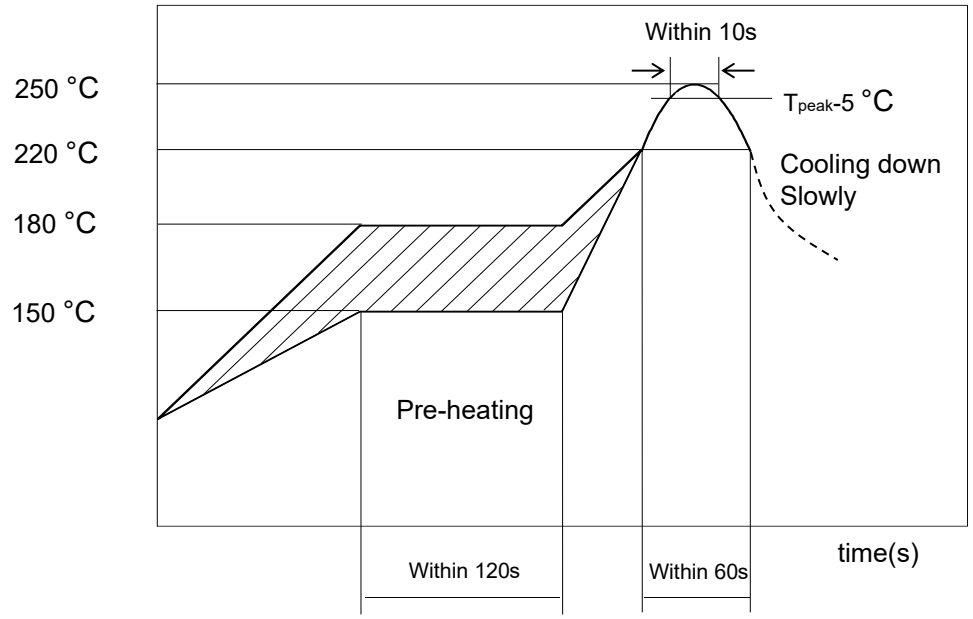

Please use the reflow within 2 times.
Use rosin type flux or weakly active flux with a chlorine content of 0.2 wt. % or less.

14.6 Cleaning

This product is moisture sensitive; therefore, any cleaning is not recommended. If any cleaning process is done the customer is responsible for any issues or failures caused by the cleaning process.

Downloaded from Arrow.com.

14.7 Operational Environment Conditions

Products are designed to work for electronic products under normal environmental conditions (ambient temperature, humidity, and pressure). Therefore, products have no problems to be used under the similar conditions to the above-mentioned. However, if products are used under the following circumstances, it may damage products and leakage of electricity and abnormal temperature may occur.

- In an atmosphere containing corrosive gas (Cl_2, NH_3, SO_X, NO_X etc.).
- In an atmosphere containing combustible and volatile gases.
- Dusty place.
- Direct sunlight place.
- Water splashing place.
- Humid place where water condenses.
- Freezing place.

If there are possibilities for products to be used under the preceding clause, consult with Murata before actual use.

Do not apply static electricity or excessive voltage while assembling and measuring, as it might be a cause of degradation or destruction to apply static electricity to products.

Downloaded from Arrow.com.

15 Preconditions to Use Our Products

PLEASE READ THIS NOTICE BEFORE USING OUR PRODUCTS.

Please make sure that your product has been evaluated and confirmed from the aspect of the fitness for the specifications of our product when our product is mounted to your product.

All the items and parameters in this product specification/datasheet/catalog have been prescribed on the premise that our product is used for the purpose, under the condition and in the environment specified in this specification. You are requested not to use our product deviating from the condition and the environment specified in this specification.

Please note that the only warranty that we provide regarding the products is its conformance to the specifications provided herein. Accordingly, we shall not be responsible for any defects in products or equipment incorporating such products, which are caused under the conditions other than those specified in this specification.

WE HEREBY DISCLAIM ALL OTHER WARRANTIES REGARDING THE PRODUCTS, EXPRESS OR IMPLIED, INCLUDING WITHOUT LIMITATION ANY WARRANTY OF FITNESS FOR A PARTICULAR PURPOSE, THAT THEY ARE DEFECT-FREE, OR AGAINST INFRINGEMENT OF INTELLECTUAL PROPERTY RIGHTS.

You agree that you will use any and all software or program code (including but not limited to firmware, and radio configuration files) we may provide or to be embedded into our product (“Software”) provided that you use the Software bundled with our product. YOU AGREE THAT THE SOFTWARE SHALL BE PROVIDED TO YOU “AS IS” BASIS, MURATA MAKES NO REPRESENTATIONS OR WARRANTIES THAT THE SOFTWARE IS ERROR-FREE OR WILL OPERATE WITHOUT INTERRUPTION. AND MORE, MURATA MAKES NO REPRESENTATIONS OR WARRANTIES OF ANY KIND WHETHER EXPRESS OR IMPLIED WITH RESPECT TO THE SOFTWARE. MURATA EXPRESSLY DISCLAIM ANY AND ALL WARRANTIES OR CONDITIONS OF MERCHANTABILITY, FITNESS FOR A PARTICULAR PURPOSE NOR THE WARRANTY OF TITLE OR NON-INFRINGEMENT OF INTELLECTUAL PROPERTY RIGHTS.

You shall indemnify and hold harmless us, our affiliates, and our licensor from and against any and all claims, costs, expenses and liabilities (including attorney’s fees), which arise in connection with the using the Software.

The product shall not be used in any application listed below which requires especially high reliability for the prevention of such defect as may directly cause damage to the third party's life, body or property. You acknowledge and agree that, if you use our products in such applications, we will not be responsible for any failure to meet such requirements. Furthermore, YOU AGREE TO INDEMNIFY AND DEFEND US AND OUR AFFILIATES AGAINST ALL CLAIMS, DAMAGES, COSTS, AND EXPENSES THAT MAY BE INCURRED, INCLUDING WITHOUT LIMITATION, ATTORNEY FEES AND COSTS, DUE TO THE USE OF OUR PRODUCTS AND THE SOFTWARE IN SUCH APPLICATIONS.

- Aircraft equipment.
- Aerospace equipment.
- Undersea equipment.
- Power plant control equipment.
- Medical equipment.
- Traffic signal equipment.

Downloaded from Arrow.com.

- Burning / explosion control equipment.
- Disaster prevention / crime prevention equipment.
- Transportation equipment (vehicles, trains, ships, elevator, etc.).
- Application of similar complexity and/ or reliability requirements to the applications listed in the above.
- We expressly prohibit you from analyzing, breaking, reverse-engineering, remodeling altering, and reproducing our product. Our product cannot be used for the product which is prohibited from being manufactured, used, and sold by the regulations and laws in the world.

Even in the unlikely event that an abnormality or malfunction occurs in this product under operating conditions that conform to the specifications, be sure to add an appropriate fail-safe function to the system to prevent secondary accidents.

We do not warrant or represent that any license, either express or implied, is granted under any our patent right, copyright, mask work right, or our other intellectual property right relating to any combination, machine, or process in which our products or services are used. Information provided by us regarding third-party products or services does not constitute a license from us to use such products or services or a warranty or endorsement thereof. Use of such information may require a license from a third party under the patents or other intellectual property of the third party, or a license from us under our patents or other intellectual property.

Please do not use our products, our technical information and other data provided by us for the purpose of developing of mass-destruction weapons and the purpose of military use.

Moreover, you must comply with "foreign exchange and foreign trade law", the "U.S. export administration regulations", etc.

Please note that we may discontinue the manufacture of our products, due to reasons such as end of supply of materials and/or components from our suppliers.

By signing on specification sheet or approval sheet, you acknowledge that you are the legal representative for your company and that you understand and accept the validity of the contents herein. When you are not able to return the signed version of specification sheet or approval sheet within 30 days from receiving date of specification sheet or approval sheet, it shall be deemed to be your consent on the content of specification sheet or approval sheet. Customer acknowledges that engineering samples may deviate from specifications and may contain defects due to their development status. We reject any liability or product warranty for engineering samples. In particular we disclaim liability for damages caused by

- The use of the engineering sample other than for evaluation purposes, particularly the installation or integration in the product to be sold by you,
- Deviation or lapse in function of engineering sample,
- Improper use of engineering samples.
- We disclaim any liability for consequential and incidental damages.

This Precondition to Use Our Products stipulated in this datasheet can only be modified, amended or altered by documents that explicitly reflect the mutual consent of both parties (including instances where one party explicitly indicates its acceptance of terms provided by the other party through click-through agreements).

If you can’t agree with the above contents, please contact sales.

Downloaded from Arrow.com.

Revision History

Revision Code	Date	Changed Item	Comment
1	2025.08.25		Initial release. Base IC datasheet revision: AF
2	2025.12.18	2 Key Features 4 Block Diagram 6 Dimensions, Marking and Terminal … 5.1 Certification Information 5.2 5.2 Radio Regulatory Certification by Country 11 DC / RF Characteristics 8 Absolute Maximum Rating 9.1 Operating Conditions 9.4 Power modes 9.5 Package Thermal Condition 11.1 DC/RF Characteristics for IEEE 802.11b 12 Land Pattern 13.1 Dimensions of Tape (Plastic Tape) 13.2 Dimension of Reel 13.4 Leader and Tail Tape	・Added Dimension and FIT. ・Changed VCC to 1V8 ・Added side view ・Added TBD ・Added this section. ・Updated Tx power and Current consumption ・Added VIO max ・Updated VIO max ・Corrected typo ・Defined RΨjt ・Added information about short preamble. ・Added land pattern ・Added Figure 11 ・Added Figure 12 ・Added quantity of a reel Base IC datasheet revision: AF
3	2026.02.17	5.1 Radio Certification 7.2 Pin Descriptions 7.5 I/O Mux Table	・Updated US/CA/TW/ANZ ・Pin 43 GPIO_8 : Added comments ・Pin 1,2,3,4,44,45 Added comments ・Added SPI_INT
4	2026.07.15	11 DC / RF Characteristics	・Change definition of current consumption 1.8V+3.3V→1.8V, 3.3V This change does not affect performance.

Downloaded from Arrow.com.

Copyright © Murata Manufacturing Co., Ltd. All rights reserved. The information and content in this document are provided “as-is” with no warranties of any kind and are for informational purpose only. Data and information have been carefully checked and are believed to be accurate; however, no liability or responsibility for any errors, omissions, or inaccuracies is assumed.

Wi-Fi® is a registered trademark of Wi-Fi Alliance. The Bluetooth® word mark and logos are registered trademarks owned by Bluetooth SIG, Inc. Other brand and product names are trademarks or registered trademarks of their respective owners.

Specifications are subject to change without notice.

Downloaded from Arrow.com.