RoHS COMPLIANT

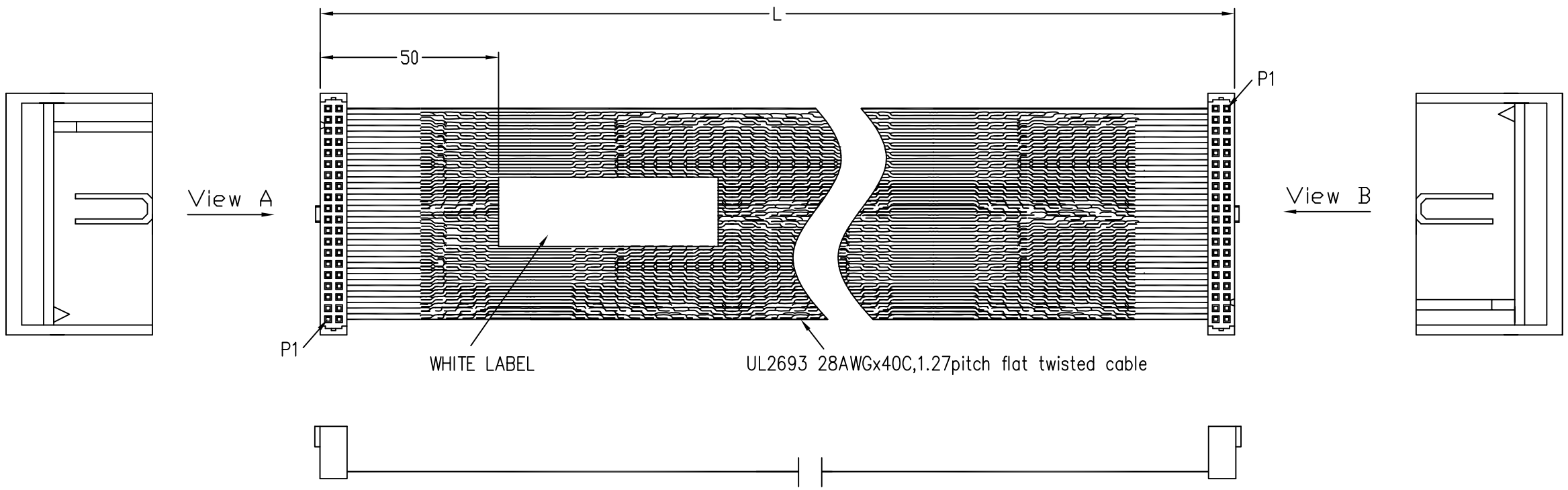

Part-No.	Length-L
33 18 243 150 0069	1500mm
33 18 243 100 0057	1000mm
33 18 243 050 0055	500mm

NOTES:

1.) CABLE MUST BE PERFORMED 100% CONTINUITY TEST.

2.) WHITE LABEL CONTENT:

DATE CODE
HARTING P/N

BLACK FONT; FONT HEIGHT: 3.5.

3.) CABLE SHOULD BE FOLDED MANY CIRCLES ACCORDING TO TOTAL CABLE LENGTH AND PACKED BY A PLASTIC BAG (QTY ACCORDING TO ACTUAL CONDITION),STICK THE LABEL WITH P/N,QTY AND LOT NUMBER ON IT,THEN PUT IT INTO THE CARTON (QTY ACCORDING TO ACTUAL CONDITION).

4.) THE CARTON SHOULD BE STICKED THE LABEL WITH P/N AND QTY CONTENT.

All Dimensions in mm
Original Size DIN A 3

Mod.	Dat.	Name

Techn. Character.

	Dat.	Name
Detail.	1.09.08	Andrew
Insp.	1.12.08	PeterD
Stand.	1.12.08	BruceT

Scale /

Free size tolerances

SEK 40P FEMALE DOUBLE END
FLAT TWIST CABLE ASSY,L=xM

ZHUHAI HARTING LIMITED

TB 33 18 0002 .00

Sub.

Page /

Downloaded from Arrow.com.