MICRO SPEAKER

Product No. 130442

BMS30-12B-08H5W90-2W

Issue no. BS/TES01.1989

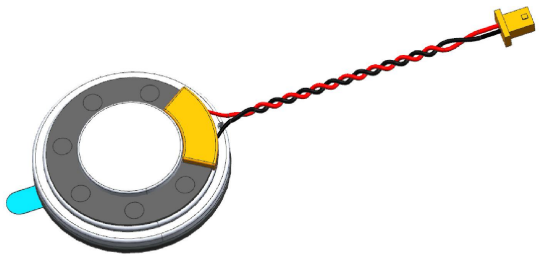

Features:

- Loud sound output
- RoHS

BESTAR Holdings Co., Ltd.

www.be-star.com | info@be-star.com

Downloaded from Arrow.com.

Content:

1 Characteristics 3
1.1 Technical terms 3
1.2 Test method 4
1.3 Frequency Response Curve 5
1.4 F0 Curve 6
1.5 Total Harmonic Distortion 7
1.6 R&B Curve 8
2 Part List 9
3 Dimension 10
4 Reliability Test .....11~12
5 Packing 13
5.1 Packing drawing 13
5.2 Packing quantity 13
6 History change record 14
7 Important Notice 15

Downloaded from Arrow.com.

1.Characteristics

1.1 Technical terms

1. Size	Ø30*5.0mm(uint)
2. Impedance at 2KHz	8±15%Ω
3. Lowest Resonance frequency	850±20%Hz
4.Frequency Response	F0~20KHz
5. Rated input power	2W
6. Maximum input power	2.2W
7. Buzz & Rattle(at sine wave 4V)	must be normal between 300~3400Hz
8. SPL(0.1W 10cm)	89±3dB at 0.8,1.0,1.2,1.5KHz Ave
9. THD(0.1W 10cm)	≤10% at 1kHz
10. Waterproof Level	IP67
11. Storage temperature	-30...+70℃
12. Operating temperature	-20...+60℃

Downloaded from Arrow.com.

1.2 Test method:

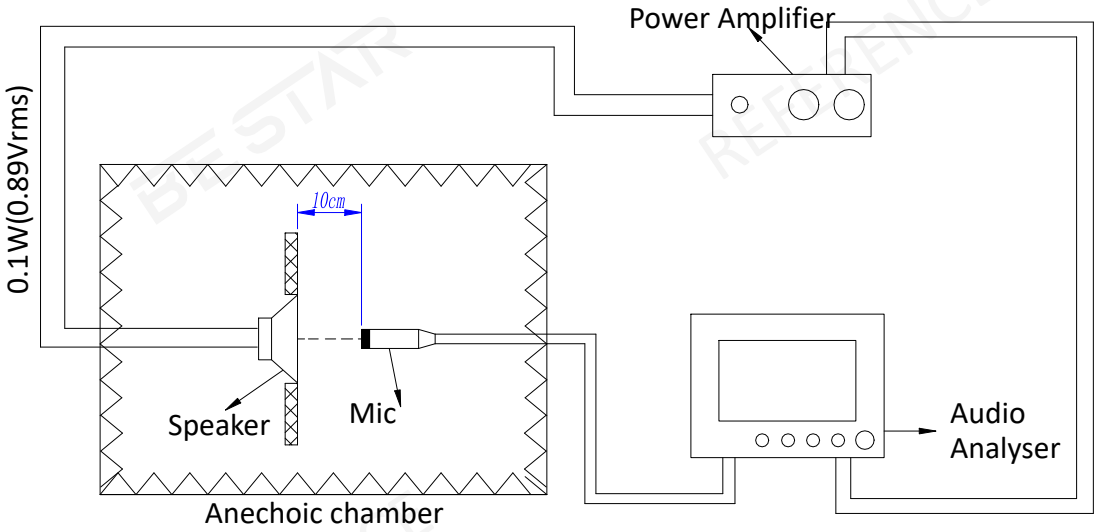

Downloaded from Arrow.com.

1.3 Frequency Response Curve (only for reference)

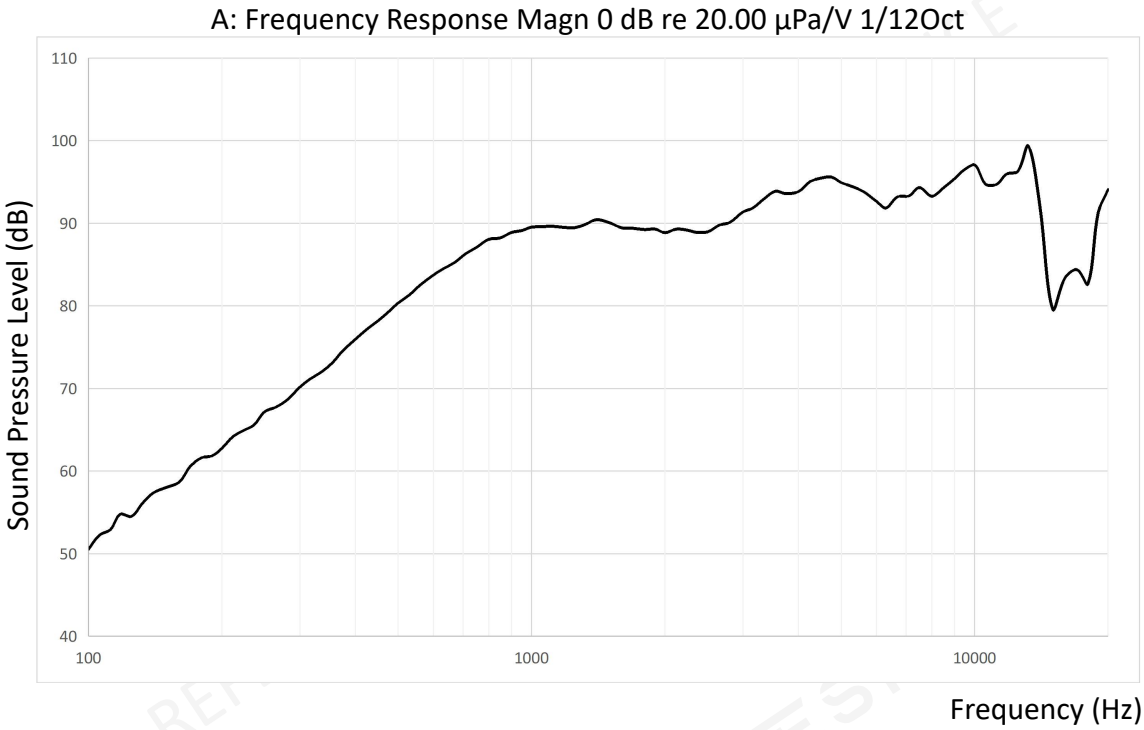

1.3.1 Sensitivity

SPL is expressed in dB rel 20 µPa,computed according to IEC 268-5.
Measurement set up according chapter 1.2 and parameters according chapter 1.3.

Downloaded from Arrow.com.

1.4 F0 Curve (only for reference)

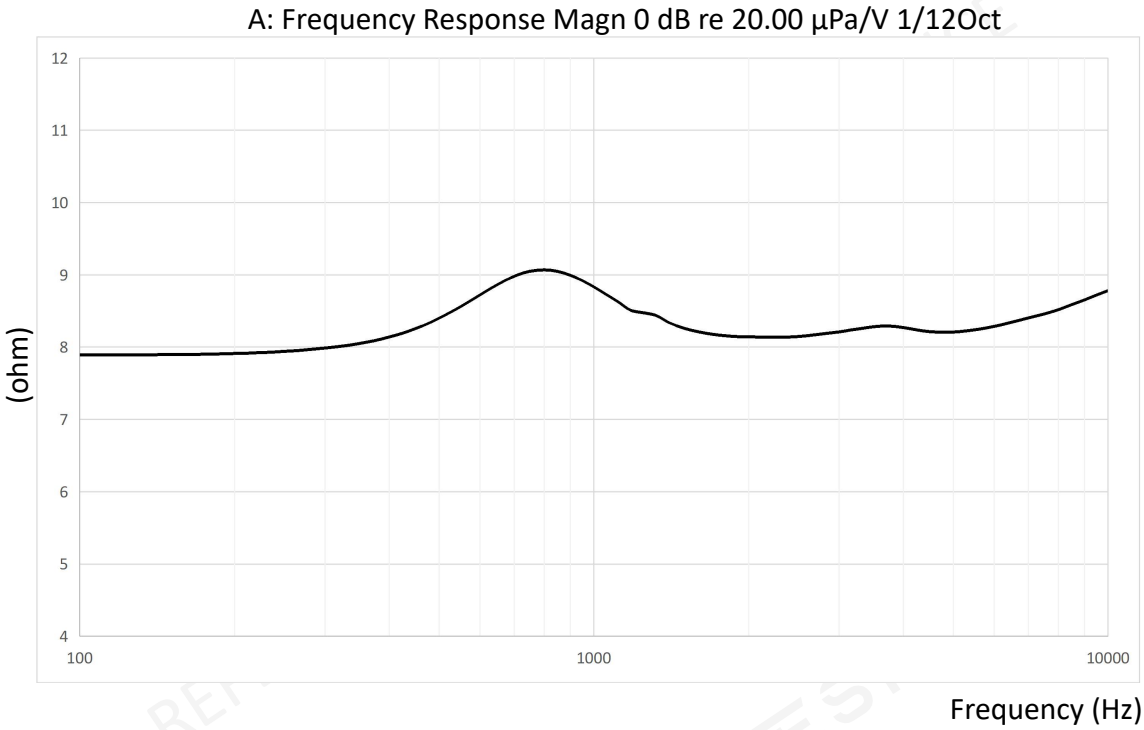

1.4.1 Resonance Frequency

Resonance frequency is measured according test set up in chapter 1.2 and parameters according chapter 1.4

Downloaded from Arrow.com.

1.5 Total Harmonic Distortion (only for reference)

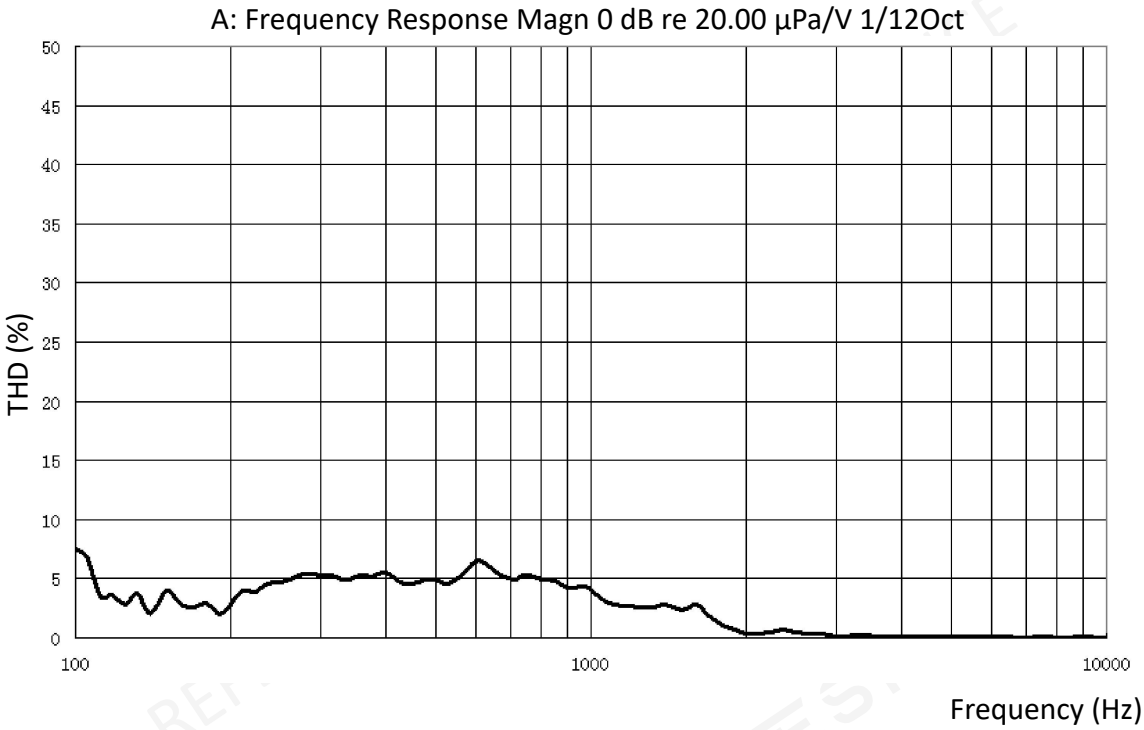

1.5.1 THD

THD is measured according test set up in chapter 1.2 and parameters according chapter 1.5

Downloaded from Arrow.com.

1.6 R&B Curve (only for reference)

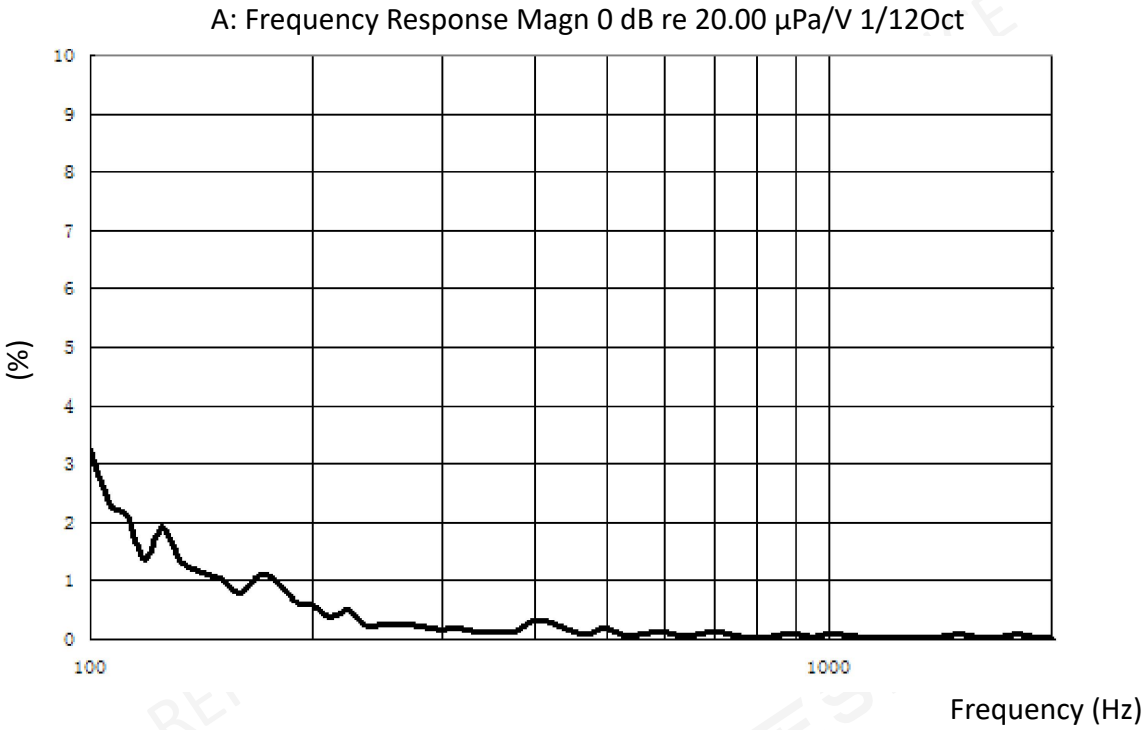

1.6.1 R&B

R&B is measured according test set up in chapter 1.2 and parameters according chapter 1.6

Downloaded from Arrow.com.

2.Part List

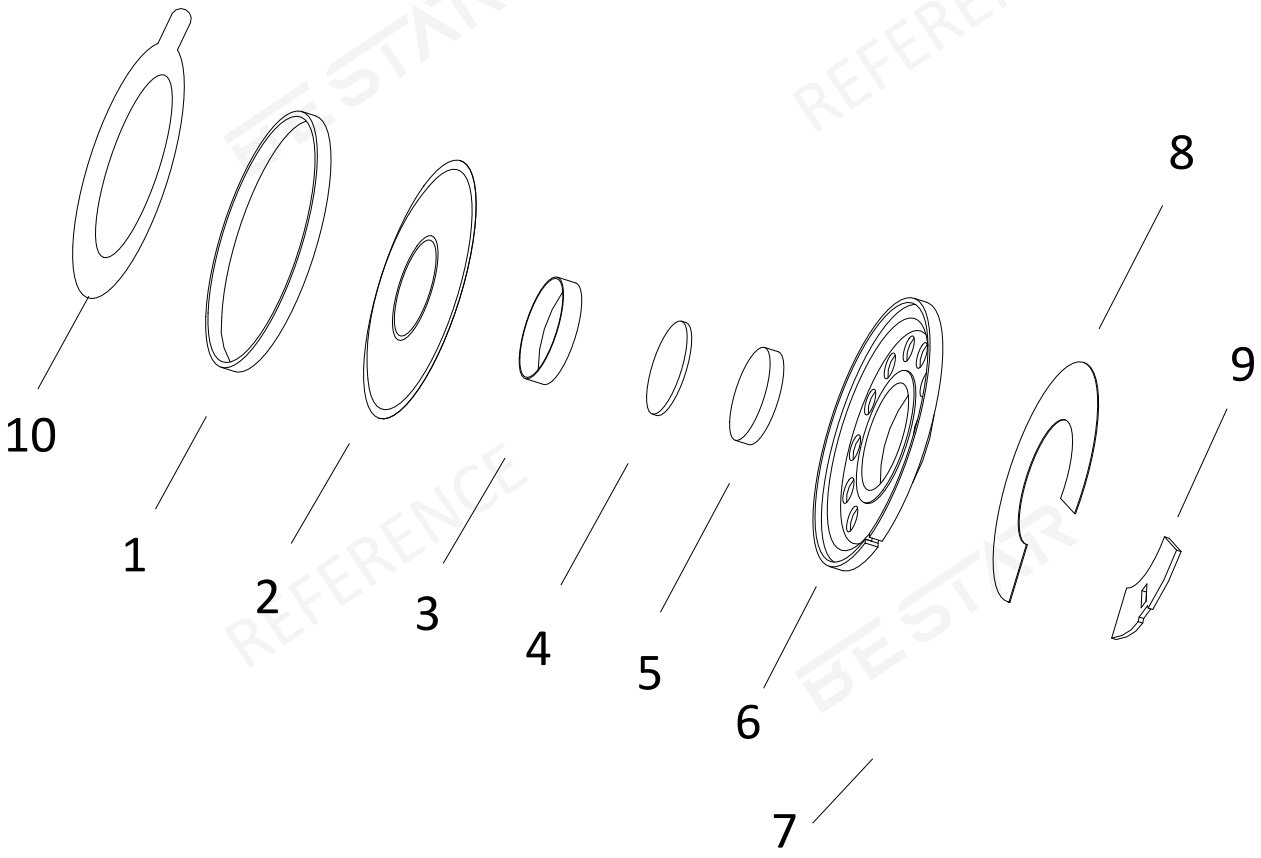

10 .Rubber pads	PE+*7972 glue*
9. PCB	Epoxy and Cu(plating Sn）
8. Mesh	Cloth
7. Plug wire	Cu & PVC
6. Frame	SPCC
5. Magnet	NdFeB
4. Plate	SPCC
3. Voice coil	Cu
2.Diaphragm	PEN
1. Gasket	ABS

Downloaded from Arrow.com.

3. Dimension

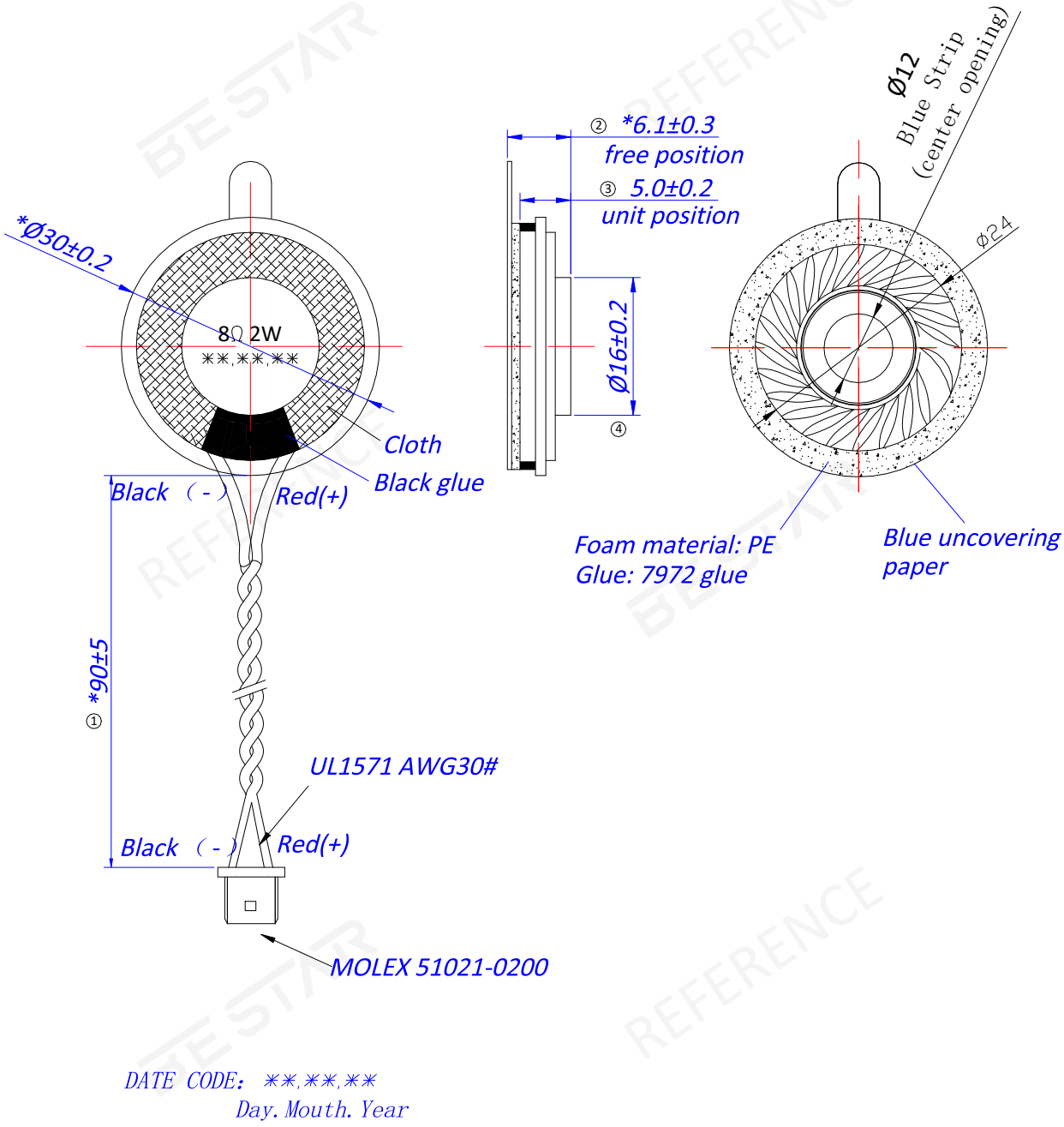

Tolerance:±0.3mm

Downloaded from Arrow.com.

4. Reliability test

4.1 High temp preservation test

The product was placed in an environment of +70℃ for 96 hours. After the end of the experiment, the product was placed in room temperature for 2 hours and then tested for abnormal sound frequency sweep and acoustic parameters. Sinusoidal wave 4.0Vrms (300~3400Hz) sweeps without abnormal sound, F0 should meet the original specification requirements, and the output sound pressure variation is within ±3dB.

4.2 Low temp preservation test

The product was placed in an environment of -30℃ for 96 hours. After the end of the experiment, the product was placed in room temperature for 2 hours and then tested for abnormal sound frequency sweep and acoustic parameters. Sinusoidal wave 4.0Vrms (300~3400Hz) sweeps without abnormal sound, F0 should meet the original specification requirements, and the output sound pressure variation is within ±3dB.

4.3 Thermal shock test

The product is subjected to 10 times of temperature cycling impact, and the cycling content is as shown in the figure. After the end of the experiment, the product is placed at room temperature for 2 hours, and then abnormal sound frequency sweep and acoustic parameters are tested. Sinusoidal wave 4.0Vrms (300~3400Hz) sweeps without abnormal sound, F0 should meet the original specifications, and the output sound pressure variation is within ±6dB.

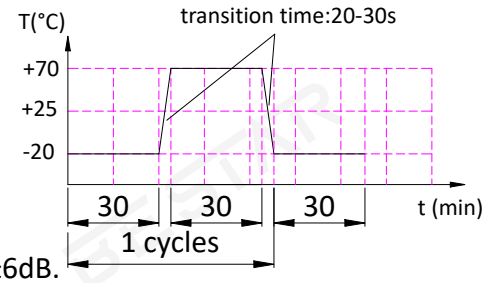

4.4 Constant damp heat test

Place the product in a constant temperature +40±3℃ relative humidity 95±3%RH environment for 96 hours. After the experiment, place the product at room temperature to recover for 2 hours, and then perform abnormal sound frequency sweep and acoustic parameter test on the product. Sine wave 4.0Vrms (300~3400Hz) sweep frequency without abnormal sound, the output sound pressure change is within ±3dB.

4.5 Ordinary temp life

At room temperature, the pink noise signal（200~3400Hz）of the rated power input of the product works continuously for 96 hours.At the end of the experiment, the product was placed at room temperature for 2 hours, and then the abnormal sound frequency sweep and acoustic parameters were tested. Sinusoidal wave 4.0Vrms (300~3400Hz) sweeps without abnormal sound, F0 should meet the original specification requirements, and the output sound pressure variation is within ±3dB.

4.6 High temperature life test

At high temperature +60℃, the pink noise signal（200~3400Hz）of the rated power input of the product works continuously for 96 hours.At the end of the experiment, the product was placed at room temperature for 2 hours, and then the abnormal sound frequency sweep and acoustic parameters were tested. Sinusoidal wave 4.0Vrms (300~3400Hz) sweeps without abnormal sound, F0 should meet the original specification requirements, and the output sound pressure variation is within ±10dB.

Downloaded from Arrow.com.

4.7 High temperature life test 2

At high temperature +70℃, the pink noise signal（200~3400Hz）of the rated power input.According to 30S/ on -30S/ off, the test was carried out for 96h. At the end of the experiment, the product was placed at room temperature for 2 hours, and then the abnormal sound frequency sweep and acoustic parameters were tested. Sinusoidal wave 4.0Vrms (300~3400Hz) sweeps without abnormal sound, F0 should meet the original specification requirements, and the output sound pressure variation is within ±10dB.

4.8 Low temperature life test

At low temperature -20℃, the pink noise signal（200~3400Hz）of the rated power input of the product works continuously for 96 hours.At the end of the experiment, the product was placed at room temperature for 2 hours, and then the abnormal sound frequency sweep and acoustic parameters were tested. Sinusoidal wave 4.0Vrms (300~3400Hz) sweeps without abnormal sound, F0 should meet the original specification requirements, and the output sound pressure variation is within ±10dB.

4.9 Low temperature life test 2

At low temperature -30℃, the pink noise signal（200~3400Hz）of the rated power input. According to 30S/ on -30S/ off, the test was carried out for 96h .At the end of the experiment, the product was placed at room temperature for 2 hours, and then the abnormal sound frequency sweep and acoustic parameters were tested. Sinusoidal wave 4.0Vrms (300~3400Hz) sweeps without abnormal sound, F0 should meet the original specification requirements, and the output sound pressure variation is within ±10dB.

4.10 Maximum power test

At room temperature, the pink noise signal（300~3400Hz）of the Maximum power input.According to 1S/ on -59S/ off, the test was carried out for 60 cycles. After the experiment, the frequency sweep of sine wave 4Vrms (300~3400Hz) showed no abnormal sound.

4.11 Drop test

Free fall on concrete 100 cm high once every 3 surfaces for a total of 18 times. After the test, there is no separation, deformation, clearance or cracking in part of the product. The sinusoid wave sweeps 4.0Vrms (300~3400Hz) without abnormal sound. F0 should meet the original specifications and the variation of output sound pressure is within ±3dB.

4.12 Waterproofing test (strong water spraying test)

Test conditions: The sample (except the sound outlet surface, all the samples have been protected) The top of the product is 0.15 - 1m away from the water surface for 30 minutes without affecting the performance and water leakage., sine wave sweeps 4.0Vrms (300~3400Hz) No abnormal sound in frequency sweep,F0 should meet the original specification requirements, and the variation of output sound pressure is within ±3dB

Downloaded from Arrow.com.

5. Packing

5.1 Packing drawing (unit:mm)

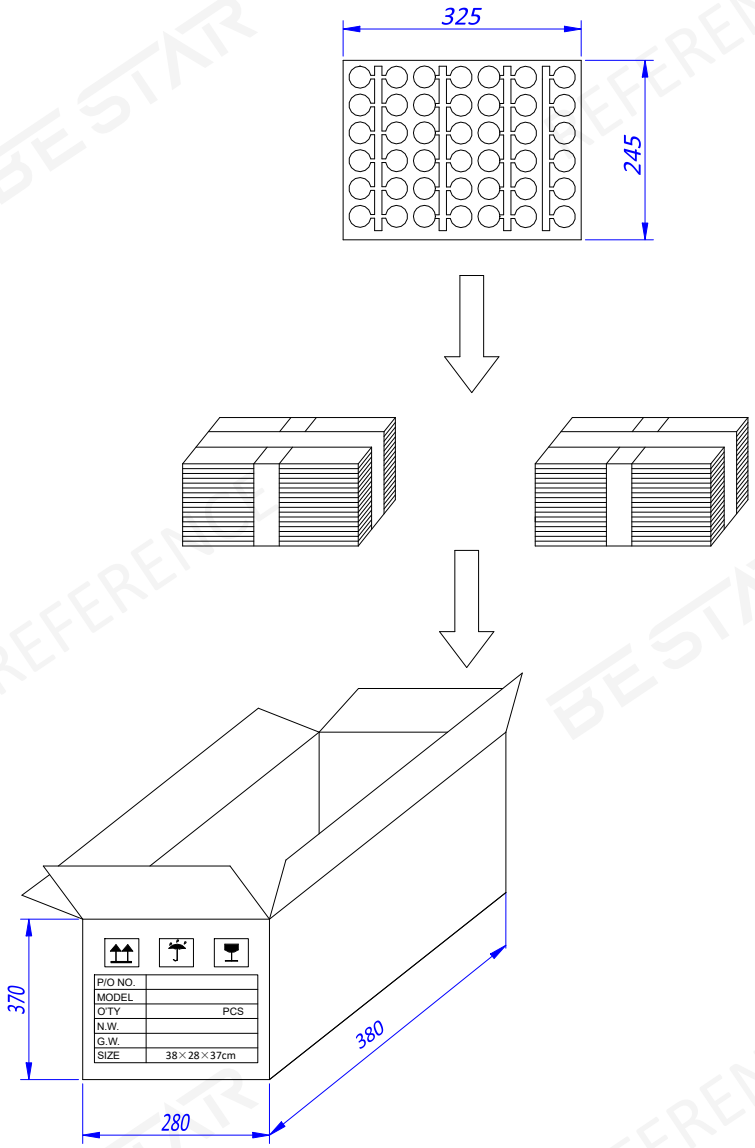

5.2 Packing quantity

1) 40pcs per carton
2) 21pcs carton per box
3) total 840pcs per box,
4) carton size: 380X280X370mm

Downloaded from Arrow.com.

6. History change record

Version	Change Items	Date	Drawn	Checked	Approved
A0	First Edition	2021.01.16	Star.Liu	Emma. Ren	Jason.Zhang
A1	Change the plug wire to a stranded wire	2021.04.23	Star.Liu	Emma. Ren	Jason.Zhang
A2	Waterproof grade IP66 changed to IP67	2021.04.27	Star.Liu	Emma. Ren	Jason.Zhang
A3	Blue Strip, center hole 12	2022.06.20	Star.Liu	Emma. Ren	Jason.Zhang

Downloaded from Arrow.com.

7.Important Notice

7.1 The products mustn't be washed

7.2 Storage Condition (Packaging)

The products should be stored in the room ,where the temperature/humidity is stable. And avoid suchplaces where there are large temperature changes. Please store the products at the following conditions: Temperature: -10 to + 40 ℃ Humidity: 15 to 85% R.H.

7.3 Expire Date on Storage

Expire date (Shelf life) of the products is six months after deliveried under the conditions of a sealed and an unopened package. Please use the products within six months after deliveried.

If you store the products for a long time (more than six months), use carefully because the products may be degraded in the solderability and/or rusty.Please confirm solderability and characteristics for the products regularly.

7.4 Notice on Product Storage

(1) Please do not store the products in a chemical atmosphere (Acids, Alkali, Bases, Organic gas, Sulfides and so on), because the characteristics may be reduced at quality, and/or be degraded in the solderability due to the storage in a chemical atmosphere.

(2) Please use the products immediately after the package is opened, because the characteristics may be reduced at quality, and/or be degraded in the solderability due to storage under the poor condition.

7.5 Rated and Max input power

Rated input power

Rated input power is the maximum (limit) value which can be input to the component intentionally. If the actual input power to component keeps exceeding Rated Input power, it will damage the component acoustic performances and reliability. In the worst case, the component will get broken and no sound.

Max input power

Max input power is the maximum (limit) value for unexpected input power which is caused in the customer's circuit like surge voltage. If the actual input power to component keeps exceeding Maximum input power, it will break the component and cause no sound in a short time. Please note that component will have a risk to get broken if the unexpected input power continues.

The value of input power is set based on the sinusoidal power in the normal speaker use. If the special signal is input to component, the values of Rated and Max input power will be different. Please make a well-investigation at your laboratory in the case of the special signal input.

Downloaded from Arrow.com.