■PB・PMA・PDA Series Attachment

BASE Attachment

Plate model	Applicable models
F-PBA10-1	PBA10F
F-PBA15-1	PBA15F, PBW15F, PDA15F
F-PBA30-1	PBA30F, PBW30F, PMA15F, PDA30F
F-PBA50-1	PBA50F, PBW50F, PMA30F, PDA50F
F-PBA75-1	PBA75F, PMA60F
F-PBA100-1	PBA100F, PDA100F
F-PBA150-1	PBA150F, PMA100F, PDA150F

Example

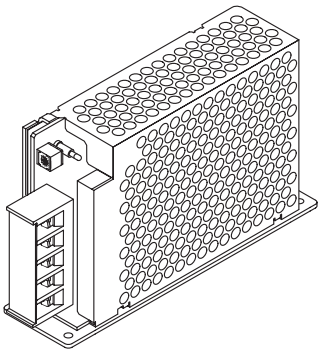

〈TOP VIEW〉(Unit : mm) (Tolerance : ±1)

F-PBA10-1

Size

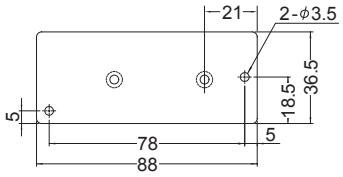

✱ Material : SECC
✱ Thickness : 2.0
✱ Weight : 60g max

Mounting hole size

FRONT←

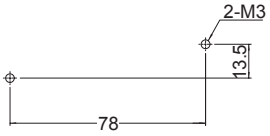

F-PBA15-1

Size

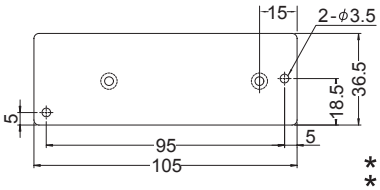

✱ Material : SECC
✱ Thickness : 2.0
✱ Weight : 70g max

Mounting hole size

FRONT←

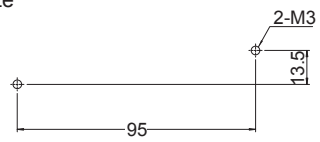

✱ M3 Flat screw is requested when mounting.
Please check catalog for the size of screw.

F-PBA30-1

Size

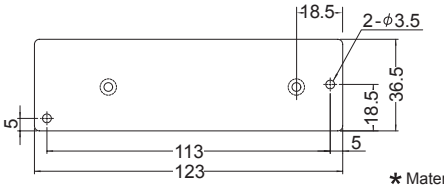

✱ Material : SECC
✱ Thickness : 2.0
✱ Weight : 85g max

Mounting hole size

FRONT←

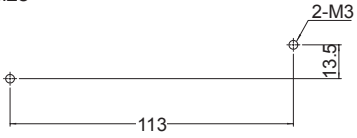

F-PBA50-1

Size

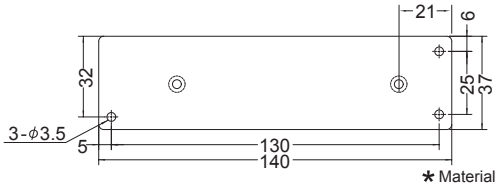

✱ Material : SECC
✱ Thickness : 2.0
✱ Weight : 95g max

✱ M3 Flat screw is requested when mounting.
Please check catalog for the size of screw.

Mounting hole size

FRONT←

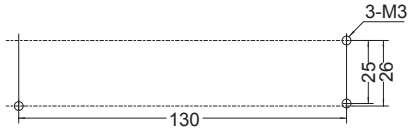

Downloaded from Arrow.com.

〈TOP VIEW〉(Unit : mm) (Tolerance : ±1)

F-PBA75-1

Size

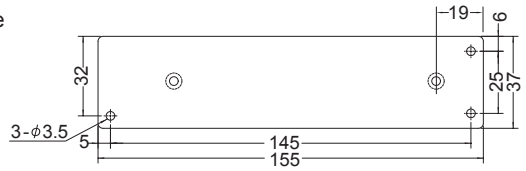

* Material : SECC
* Thickness : 2.0
* Weight : 110g max

F-PBA100-1

Size

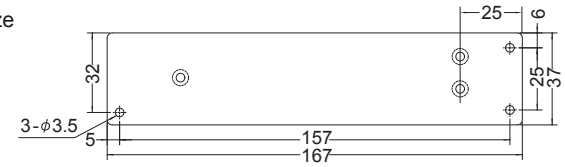

* Material : SECC
* Thickness : 2.0
* Weight : 110g max

* M3 Flat screw is requested when mounting.
Please check catalog for the size of screw.

Mounting hole size

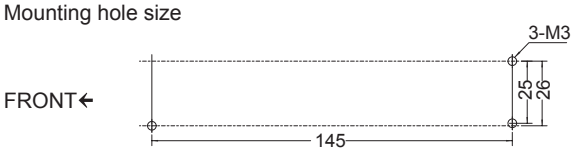

Mounting hole size

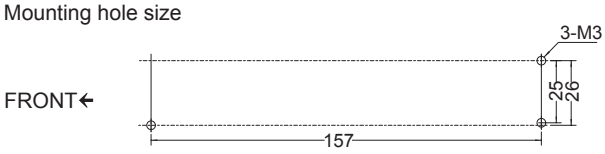

F-PBA150-1

Size

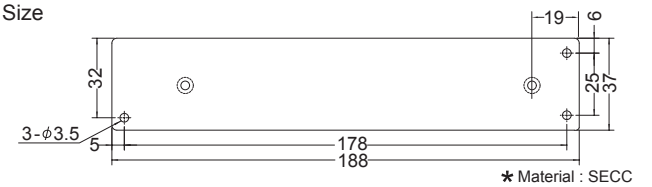

* Material : SECC
* Thickness : 2.0
* Weight : 130g max

* M3 Flat screw is requested when mounting.
Please check catalog for the size of screw.

Mounting hole size

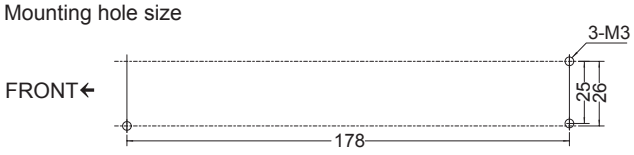

Downloaded from Arrow.com.

FRONT・REVERSE Attachment

Plate model	Applicable models
F-PBA10-2	PBA10F
F-PBA15-2	PBA15F, PBW15F, PDA15F
F-PBA30-2	PBA30F, PBW30F, PMA15F, PDA30F
F-PBA50-2	PBA50F, PBW50F, PMA30F, PDA50F
F-PBA75-2	PBA75F, PMA60F
F-PBA100-2	PBA100F, PDA100F
F-PBA150-2	PBA150F, PMA100F, PDA150F

Example

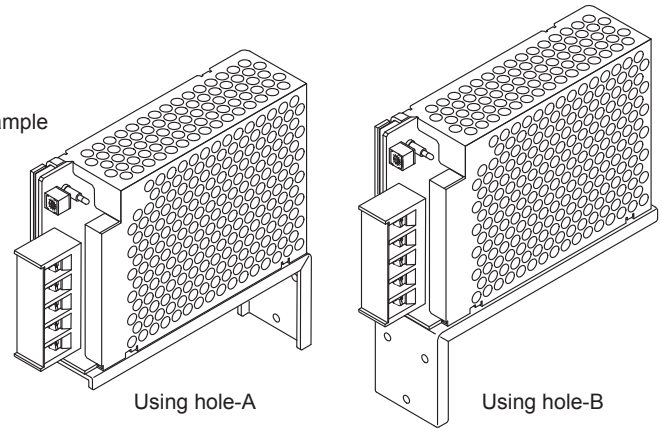

〈TOP VIEW〉 (Unit : mm) (Tolerance : ±1)

F-PBA10-2

Size

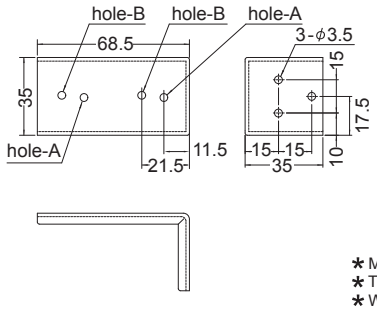

* Material : SECC
* Thickness : 1.6
* Weight : 60g max

F-PBA15-2

Size

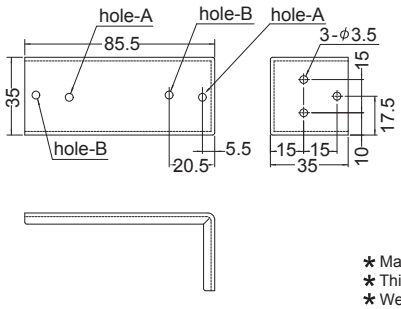

* Material : SECC
* Thickness : 1.6
* Weight : 70g max

* M3 screw is requested when mounting.
Please check catalog for the size of screw.

F-PBA30-2

Size

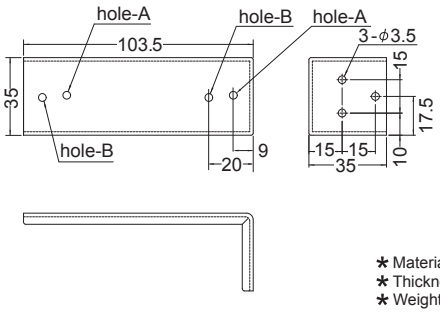

* Material : SECC
* Thickness : 1.6
* Weight : 80g max

F-PBA50-2

Size

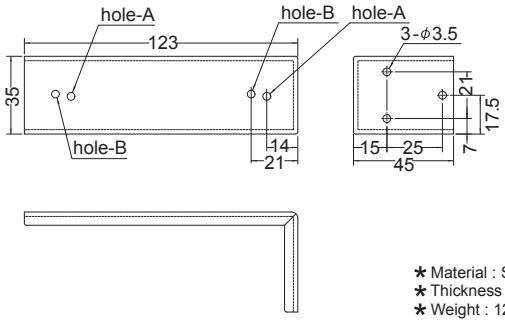

* Material : SECC
* Thickness : 2.0
* Weight : 120g max

* M3 screw is requested when mounting.
Please check catalog for the size of screw.

Downloaded from Arrow.com.

〈TOP VIEW〉 (Unit : mm) (Tolerance : ±1)

F-PBA75-2

Size

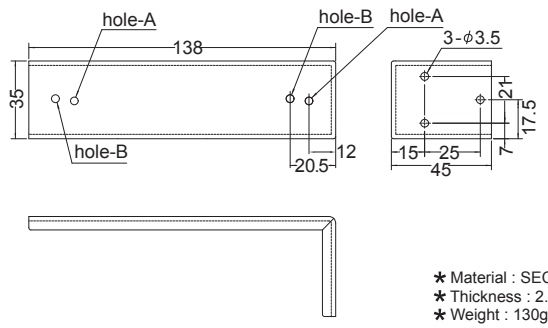

✱ Material : SECC
✱ Thickness : 2.0
✱ Weight : 130g max

F-PBA100-2

Size

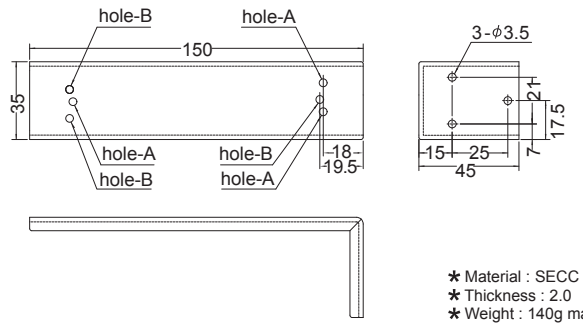

✱ Material : SECC
✱ Thickness : 2.0
✱ Weight : 140g max

✱ M3 screw is requested when mounting.
Please check catalog for the size of screw.

F-PBA150-2

Size

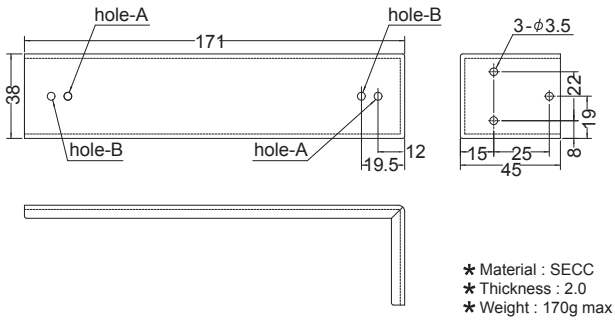

✱ Material : SECC
✱ Thickness : 2.0
✱ Weight : 170g max

✱ M3 screw is requested when mounting.
Please check catalog for the size of screw.

Downloaded from Arrow.com.

■DIN rail Attachment Plate(PB • PDASeries)

APPLICABLE TO MODEL

DIN rail width : 35mm

Plate model	Model	screws for installation	
		Type	Qty
FD-PBA10	PBA10F	M3	2pcs
FD-PBA15	PBA15F, PBW15F, PDA15F		
FD-PBA30	PBA30F, PBW30F, PDA30F		
FD-PBA50	PBA50F, PBW50F, PBA75F, PDA50F		
FD-PBA100	PBA100F, PDA100F	M3	3pcs
	PBA150F, PDA150F	M3	2pcs
FD-PBA300	PBA300F, PDA300F	M4	2pcs

FD-PBA10, FD-PBA15, FD-PBA30
EXTERNAL VIEW

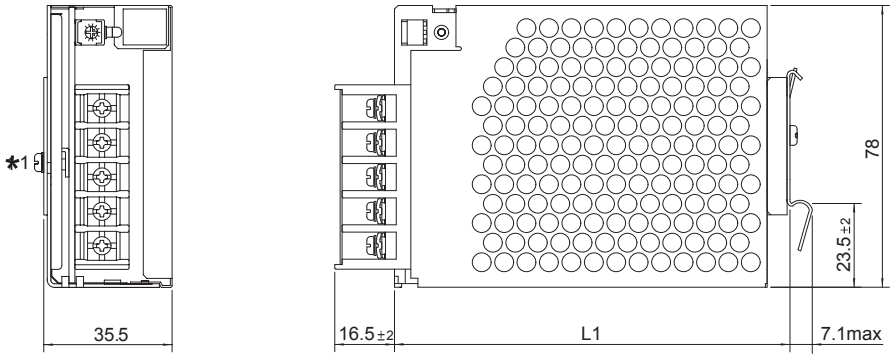

Plate model	Model	L1
FD-PBA10	PBA10F	75.0±2
FD-PBA15	PBA15F, PBW15F, PDA15F	92.0±2
FD-PBA30	PBA30F, PBW30F, PDA30F	110.0±2

* Material : SECC
* Thickness : 1.0
* Tolerance : ±1
* 1 Screws for installation (attached to Plate)
* Weight : FD-PBA10 45g max
  FD-PBA15 55g max
  FD-PBA30 60g max

Downloaded from Arrow.com.

FD-PBA50, FD-PBA100
EXTERNAL VIEW

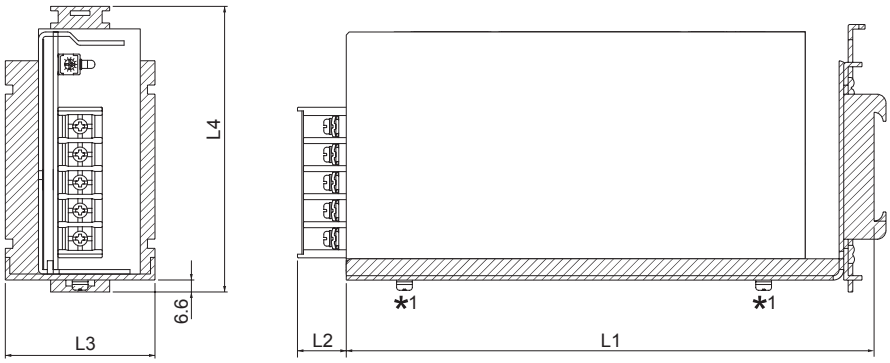

Plate model	Model	L1	L2	L3	L4
FD-PBA50	PBA50F,PDA50F	135	16.5±2	41	102.5
	PBA75F	150			
FD-PBA100	PBA100F,PDA100F	162	13.5±2	42.5	112
	PBA150F,PDA150F	183			

* Material : SECC
* Thickness : 1.6
* Tolerance : ±1
* 1 Screws for installation (attached to Plate)
* Weight : FD-PBA50 220g max
  Weight : FD-PBA100 260g max

FD-PBA300
EXTERNAL VIEW

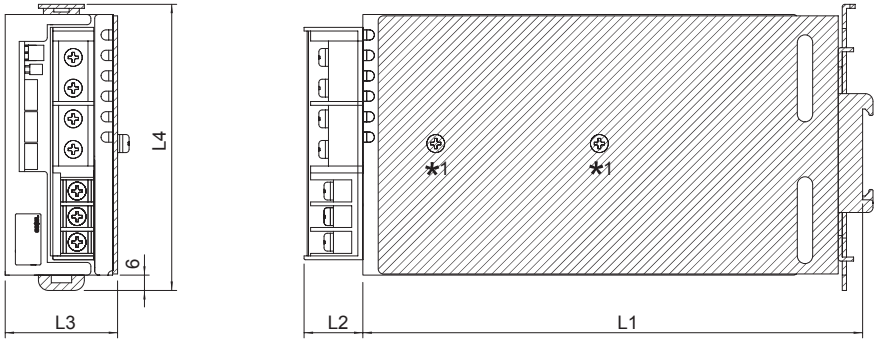

Plate model	Model	L1	L2	L3	L4
FD-PBA300	PBA300F,PDA300F	195.5	25max	44	112

* Material : SPHC
* Thickness : 2.0
* Tolerance : ±1
* 1 Screws for installation (attached to Plate)
* Weight : 500g max

Downloaded from Arrow.com.

Harness to use the function is prepared in PB , PDA series.

PB Series
PDA Series

Mating harness

Model	Harness model #	Contents
PBA10F, PBA15F, PBW15F, PBA30F, PBW30F, PBA50F, PBW50F, PBA75F, PBA100F, PBA150F ✱1	H-IN-3 or H-IN-27	Input harness when I/O interface is connector (Mfr: J.S.T.) type (option : -J1)
PBA10F, PBA15F, PBA30F, PBA50F	H-OU-9	Output harness when I/O interface is connector (Mfr: J.S.T.) type (option : -J1)
PBA75F, PBA100F, PBA150F ✱1	H-OU-18	Output harness when I/O interface is connector (Mfr: J.S.T.) type (option : -J1)
PBW15F, PBW30F, PBW50F	H-OU-48	Output harness when I/O interface is connector (Mfr: J.S.T.) type (option : -J1)
PBA50F, PBW50F, PBA75F, PBA100F, PBA150F	H-RC-1	Harness for using option : -R
PBA100F, PBA150F ✱2	H-SN-1	Harness for using option : -K
PBA10F, PBA15F, PBW15F, PBA30F, PBW30F PBA50F, PBW50F, PBA75F, PBA100F, PBA150F	H-SN-18	Harness for using option : -V
PBA300F, PDA300F	H-PA-3	Harness for parallel operation
PBA600F, PDA600F	H-SN-20	Harness for using all functions of CN1 and CN2
PBA1000F	H-SN-21	Harness for using all functions except remote sensing of CN2
PBA1500F	H-SN-22	Harness for using all functions of CN3
PBA1500T	H-SN-24	Harness for using example remote ON/OFF circuit (C)

✱1 Available for 12V, 15V, 24V, 36V and 48V output model in PBA100F / 150F.
✱2 Available for 3.3V and 5V output model in PBA100F / 150F.

●Model number

H-IN-3

Housing : VHR-5N (J.S.T.)
Pin : SVH-21T-P1.1 (J.S.T.)
Weight : 20g max

●Type

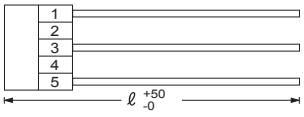

●Wire

Pin #	Wire	AWG	Color	Length ℓ (mm)
1	UL1015	20	white	500
2				
3	UL1015	20	black	500
4				
5	UL1015	20	green	500

●Model number

H-IN-27

Housing : VHR-5N (J.S.T.)
Pin : SVH-21T-P1.1 (J.S.T.)
Weight : 20g max

●Type

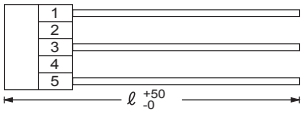

●Wire

Pin #	Wire	AWG	Color	Length ℓ (mm)
1	UL1015	20	white	500
2				
3	UL1015	20	black	500
4				
5	UL1015	20	green/yellow	500

●Model number

H-OU-9

Housing : VHR-4N (J.S.T.)
Pin : SVH-21T-P1.1 (J.S.T.)
Weight : 40g max

●Type

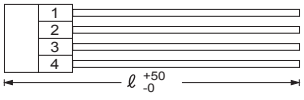

●Wire

Pin #	Wire	AWG	Color	Length ℓ (mm)
1	UL1015	18	black	500
2	UL1015	18	black	500
3	UL1015	18	red	500
4	UL1015	18	red	500

●Model number

H-OU-18

Housing : VHR-6N (J.S.T.)
Pin : SVH-21T-P1.1 (J.S.T.)
Weight : 60g max

●Type

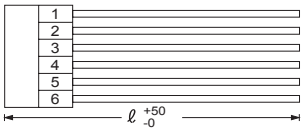

●Wire

Pin #	Wire	AWG	Color	Length ℓ (mm)
1 - 3	UL1015	18	black	500
4 - 6	UL1015	18	red	500

●Model number

H-OU-48

Housing : VHR-4N (J.S.T.)
Pin : SVH-21T-P1.1 (J.S.T.)
Weight : 40g max

●Type

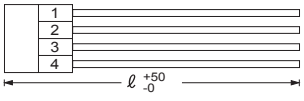

●Wire

Pin #	Wire	AWG	Color	Length ℓ (mm)
1	UL1015	18	purple	500
2	UL1015	18	black	500
3	UL1015	18	black	500
4	UL1015	18	red	500

Downloaded from Arrow.com.

●Model number

H-RC-1

Housing : XHP-2 (J.S.T.)
Pin : SXH-001T-P0.6 (J.S.T.)
Weight : 7g max

●Type

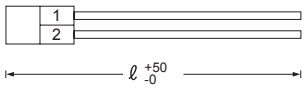

●Wire

Pin #	Wire	AWG	Color	Length ℓ (mm)
1	UL1007	22	orange	500
2	UL1007	22	blue	500

●Model number

H-SN-1

Housing : XHP-4 (J.S.T.)
Pin : SXH-001T-P0.6 (J.S.T.)
Weight : 3g max

●Type

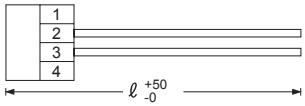

●Wire

Pin #	Wire	AWG	Color	Length ℓ (mm)
1				
2	UL1061	28	black	500
3	UL1061	28	red	500
4				

●Model number

H-SN-18

Housing : PHR-2 (J.S.T.)
Pin : SPH-002T-P0.5S (J.S.T.)
Weight : 4g max

●Type

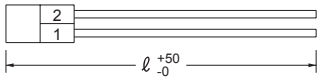

●Wire

Pin #	Wire	AWG	Color	Length ℓ (mm)
1	UL1007	26	yellow	500
2	UL1007	26	orange	500

●Model number

H-PA-3

Housing : PHDR-10VS(J.S.T)
Pin : SPHD-002T-P0.5(J.S.T)
Weight : 5g max

●Type

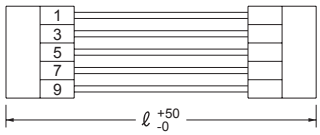

●Wire

Pin #	Wire	AWG	Color	Length ℓ (mm)
1	-	-	-	-
2	UL1061	28	red	270
3	-	-	-	-
4	UL1061	28	black	270
5	UL1061	28	yellow	270
6	UL1061	28	green	270
7	UL1061	28	blue	270
8	-	-	-	-
9	UL1061	28	orange	270
10	UL1061	28	purple	270

●Model number

H-SN-20

Housing : PHDR-10VS(J.S.T)
Pin : SPHD-002T-P0.5(J.S.T)
Weight : 8g max

●Type

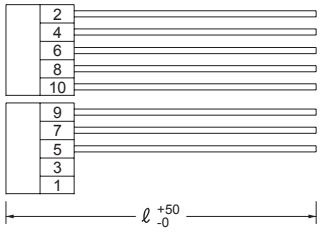

●Wire

Pin #	Wire	AWG	Color	Length ℓ (mm)
1	-	-	-	-
2	UL1061	28	red	500
3	-	-	-	-
4	UL1061	28	black	500
5	UL1061	28	yellow	500
6	UL1061	28	green	500
7	UL1061	28	blue	500
8	UL1061	28	black	500
9	UL1061	28	orange	500
10	UL1061	28	purple	500

Downloaded from Arrow.com.

●Model number

H-SN-21

Housing : PHDR-10VS(J.S.T)
Pin : SPHD-002T-P0.5(J.S.T)
Weight : 6g max

●Type

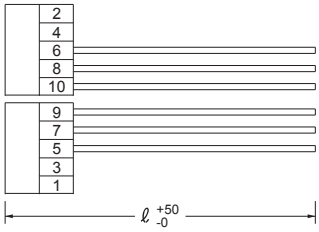

●Wire

Pin #	Wire	AWG	Color	Length ℓ (mm)
1	-	-	-	-
2	-	-	-	-
3	-	-	-	-
4	-	-	-	-
5	UL1061	28	yellow	500
6	UL1061	28	green	500
7	UL1061	28	blue	500
8	UL1061	28	black	500
9	UL1061	28	orange	500
10	UL1061	28	purple	500

●Model number

H-SN-22

Housing : PHDR-8VS(J.S.T)
Pin : SPHD-002T-P0.5(J.S.T)
Weight : 5g max

●Type

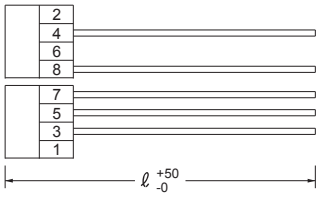

●Wire

Pin #	Wire	AWG	Color	Length ℓ (mm)
1	-	-	-	-
2	-	-	-	-
3	UL1061	28	pink	500
4	UL1061	28	brown	500
5	UL1061	28	white	500
6	-	-	-	-
7	UL1061	28	yellow	500
8	UL1061	28	gray	500

●Model number

H-SN-24

CN A :
Housing : PHDR-10VS(J.S.T)
Pin : SPHD-002T-P0.5(J.S.T)

CN B :
Housing : PHDR-08VS(J.S.T)
Pin : SPHD-002T-P0.5(J.S.T)

Weight : 2g max

✱ Pin #1 and #2, Pin #3 and #4 in CN A are connected by harness.
✱ Pin #9 in CN A and Pin #4 in CN B are connected by harness.
✱ Pin #10 in CN A and Pin #5 in CN B are connected by harness.

●Type

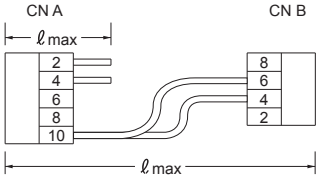

●Wire

Pin #		Wire	AWG	Color	Length ℓ (mm)
CN A	1	UL1061	28	red	30
	2	UL1061	28	red	30
	3	UL1061	28	black	30
	4	UL1061	28	black	30
	5	-	-	-	-
	6	-	-	-	-
	7	-	-	-	-
	8	-	-	-	-
	9	UL1061	28	black	70
	10	UL1061	28	black	70
CN B	1	-	-	-	-
	2	-	-	-	-
	3	-	-	-	-
	4	UL1061	28	black	70
	5	UL1061	28	black	70
	6	-	-	-	-
	7	-	-	-	-
	8	-	-	-	-

Downloaded from Arrow.com.

Terminal Attachment

Terminal attachment to facilitate two or more terminal connections to power supply output is prepared in PBA, PDA,MAX, ACE and AME series.

Type	Mating Model	Contents
B-MX-1	PBA600F PDA600F MAX1600F MAX1600T MAX3200T	Terminal attachment to facilitate terminal connections to power supply output
B-MX-9	MAX1600F MAX1600T MAX3200T	Terminal attachment for series operation as output modules

B-MX-1

Size

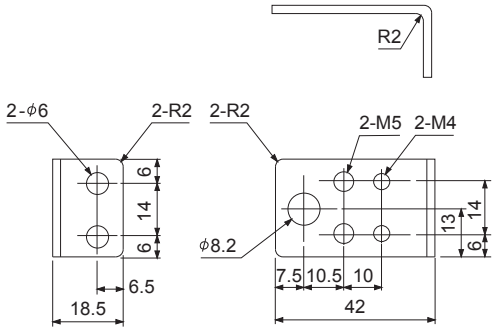

* Material : Copper
* Thickness : 2.0
* Dimension in mm
* Weight : 30g max

B-MX-9

Size

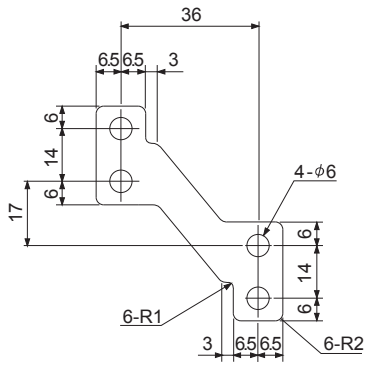

* Material : Copper
* Thickness : 1.5
* Dimension in mm
* Weight : 15g max

* It is necessary to install B-MX-1 on opposite direction to avoid short-circuit between + and - terminal block.
* Please note the direction of the installation to prevent the short-circuit between the outputs when using B-MX-1 and B-MX-9 at the same time.
* The cover of terminal block does not be attached to B-MX-1 with installation screw and solderless terminal occasionally.

Downloaded from Arrow.com.

■Fan unit

PB Series

★Fan unit is prepared by the option.

Fan unit type	Matching model	External	Pin connection
FAN-PB3 (Standard)	PBA300F <Standard>	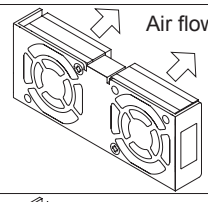 ∗Weight : 90g max	CONNECTOR = PHR-3 (Mfr : J. S. T) TERMINAL = SPH-002T-P0.5S (Mfr : J. S. T) Pin No. / Content 1 / GND 2 / FAN ALARM 3 / POWER LENGTH OF HARNESS = 40 ± 5mm
FAN-PB3-F3 (Air flow reverse : -F3)	PBA300F <Modification : F3>	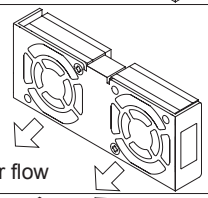 ∗Weight : 90g max	
FAN-PB3-F4 (Low speed : -F4)	PBA300F <Modification : F4>	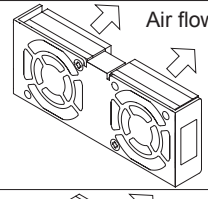 ∗Weight : 90g max	
FAN-PB6 (Standard)	PBA600F <Standard>	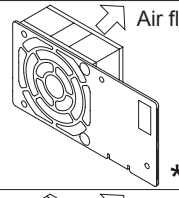 ∗Weight : 120g max	CONNECTOR = XAP-03V-1 (Mfr : J. S. T) TERMINAL = SXA-001T-P0.6 (Mfr : J. S. T) Pin No. / Content 1 / GND 2 / FAN ALARM 3 / POWER LENGTH OF HARNESS = 55 ± 7mm
FAN-PB6-F1 (Long life : -F1)	PBA600F <Modification : F1>	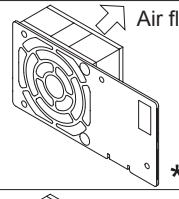 ∗Weight : 150g max	
FAN-PB6-F3 (Air flow reverse : -F3)	PBA600F <Modification : F3>	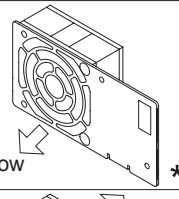 ∗Weight : 120g max	
FAN-PB6-F4 (Low speed : -F4)	PBA600F <Modification : F4>	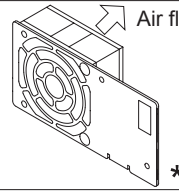 ∗Weight : 120g max	

∗1 Handle with care and don't add the impact such as falls or throwing to the unit.
∗2 Exchange the unit after intercepting the input power.
∗3 When the unit is exchanged, make sure there are not loosening of the connector and shutting the harness.

Downloaded from Arrow.com.

■Fan unit

PB Series

★Fan unit is prepared by the option.

Fan unit type	Matching model	External	Pin connection
FAN-PB10 (Standard)	PBA1000F <Standard>	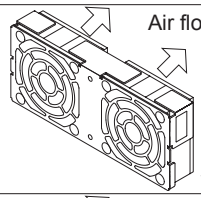 ∗Weight : 210g max	CONNECTOR = XAP-03V-1 (Mfr : J. S. T) TERMINAL = SXA-001T-P0.6 (Mfr : J. S. T) Pin No. / Content 1 / GND 2 / FAN ALARM 3 / POWER LENGTH OF HARNESS = 55 ± 7mm
FAN-PB10-F1 (Long life : -F1)	PBA1000F <Modification : F1>	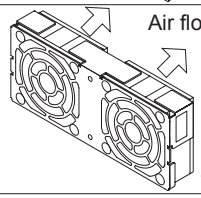 ∗Weight : 260g max	
FAN-PB10-F3 (Air flow reverse : -F3)	PBA1000F <Modification : F3>	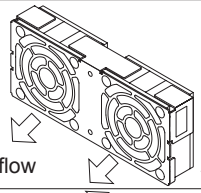 ∗Weight : 210g max	
FAN-PB10-F4 (Low speed : -F4)	PBA1000F <Modification : F4>	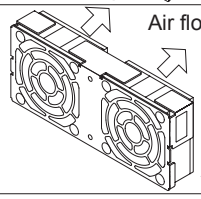 ∗Weight : 200g max	
FAN-PB15 (Standard)	PBA1500F PBA1500T <Standard>	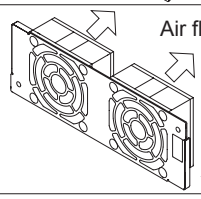 ∗Weight : 210g max	
FAN-PB15-F1 (Long life : -F1)	PBA1500F PBA1500T <Modification : F1>	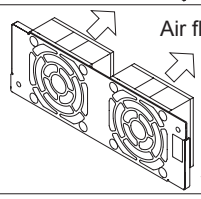 ∗Weight : 260g max	
FAN-PB15-F3 (Air flow reverse : -F3)	PBA1500F PBA1500T <Modification : F3>	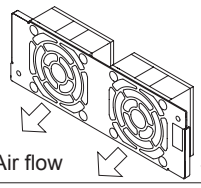 ∗Weight : 210g max	
FAN-PB15-F4 (Low speed : -F4)	PBA1500F PBA1500T <Modification : F4>	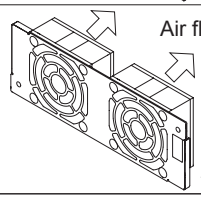 ∗Weight : 200g max	

∗1 Handle with care and don't add the impact such as falls or throwing to the unit.
∗2 Exchange the unit after intercepting the input power.
∗3 When the unit is exchanged, make sure there are not loosening of the connector and shutting the harness.

Downloaded from Arrow.com.

Insulated tube for PBA1000F, PBA1500F, PBA1500T, PJA1000F & PJA1500F

This is a tube used to insulate an output terminal.

Plate model	Applicable to model
T-PBA1500-1	PBA1000F, PBA1500F, PBA1500T, PJA1000F, PJA1500F
T-PBA1500-2	PBA1000F, PBA1500F, PBA1500T, PJA1000F, PJA1500F

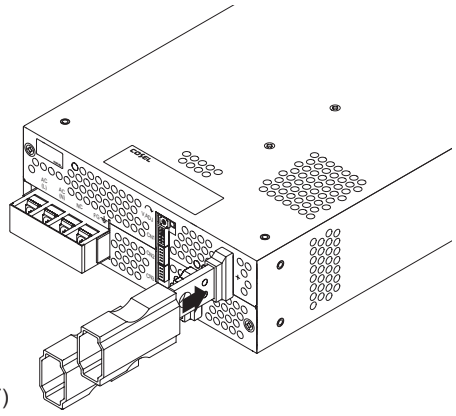

Example(PBA1500F)

(Unit : mm) (Tolerance : ±1)

T-PBA1500-1

* This is used when insulating the tip portion of an output terminal.

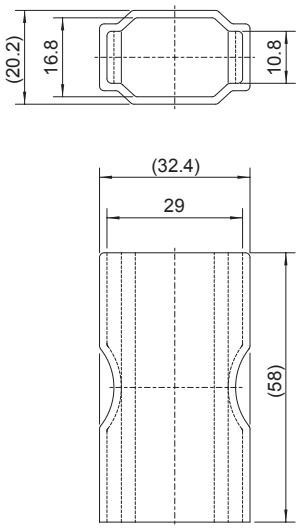

* Material : Silicone rubber Black
* Weight : 15g max

T-PBA1500-2

* This is used when insulating the root portion of an output terminal.

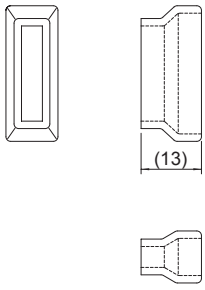

* Material : Silicone rubber Black
* Weight : 2g max

* If this product is attached, a wiring portion can't visible.
  Be careful not to forget to attach the screw or the bolt for electric wire connection.

Downloaded from Arrow.com.