BZX100A

Single Zener diode

Rev. 01 — 30 May 2007 | Product data sheet

1. Product profile

1.1 General description

General-purpose Zener diode in a SOD323F (SC-90) very small and flat lead Surface-Mounted Device (SMD) plastic package.

1.2 Features

- Non-repetitive peak reverse power dissipation: ≤ 60 W
- Small plastic package suitable for surface-mounted design

1.3 Applications

- General regulation functions
- Overvoltage protection for ElectroLuminescent (EL) driver circuits
- AEC-Q101 qualified

1.4 Quick reference data

Table 1. Quick reference data

Symbol	Parameter	Conditions		Min	Typ	Max	Unit
V_Z	working voltage	I_Z = 1 mA		95	-	105	V
I_{ZSM}	non-repetitive peak reverse current		[1]	-	-	0.5	A

[1] t_p = 100 µs; square wave; T_j = 25 °C prior to surge

2. Pinning information

Table 2. Pinning

Pin	Description		Simplified outline	Symbol
1	cathode	[1]	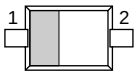	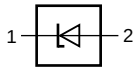 006aaa152
2	anode			

[1] The marking bar indicates the cathode.

Downloaded from Arrow.com.

3. Ordering information

Table 3. Ordering information

Type number	Package		
	Name	Description	Version
BZX100A	SC-90	plastic surface-mounted package; 2 leads	SOD323F

4. Marking

Table 4. Marking codes

Type number	Marking code
BZX100A	AS

5. Limiting values

Table 5. Limiting values

In accordance with the Absolute Maximum Rating System (IEC 60134).

Symbol	Parameter	Conditions		Min	Max	Unit
I_F	forward current			-	0.2	A
I_{ZSM}	non-repetitive peak reverse current		[1]	-	0.5	A
P_{ZSM}	non-repetitive peak reverse power dissipation		[1]	-	60	W
P_{tot}	total power dissipation	$T_{amb} \leq 25$ °C	[2]	-	310	mW
			[3]	-	550	mW
			[4]	-	1	W
T_j	junction temperature			-	150	°C
T_{amb}	ambient temperature			–65	+150	°C
T_{stg}	storage temperature			–65	+150	°C

[1] t_p = 100 µs; square wave; T_j = 25 °C prior to surge

[2] Device mounted on an FR4 Printed-Circuit Board (PCB), single-sided copper, tin-plated and standard footprint.

[3] Device mounted on an FR4 PCB, single-sided copper, tin-plated, mounting pad for cathode 1 cm^2.

[4] Device mounted on a ceramic PCB, Al_2O_3, standard footprint.

© Nexperia B.V. 2007. All rights reserved.

Downloaded from Arrow.com.

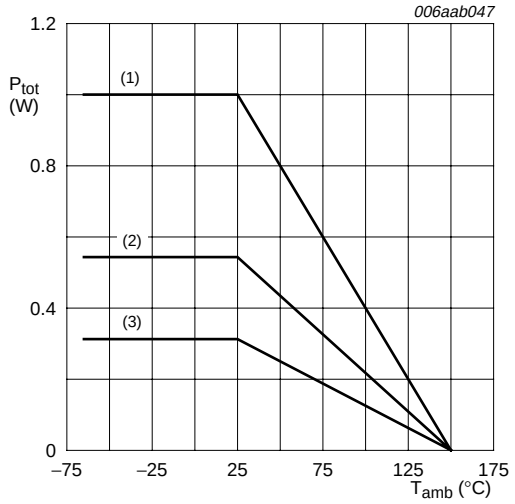

(1) Ceramic PCB, Al_2O_3, standard footprint

(2) FR4 PCB, mounting pad for cathode 1 cm^2

(3) FR4 PCB, standard footprint

Fig 1. Power derating curves

6. Thermal characteristics

Table 6. Thermal characteristics

Symbol	Parameter	Conditions		Min	Typ	Max	Unit
$R_{th(j-a)}$	thermal resistance from junction to ambient	in free air	[1]	-	-	400	K/W
			[2]	-	-	230	K/W
			[3]	-	-	125	K/W
$R_{th(j-sp)}$	thermal resistance from junction to solder point		[4]	-	-	55	K/W

[1] Device mounted on an FR4 PCB, single-sided copper, tin-plated and standard footprint.

[2] Device mounted on an FR4 PCB, single-sided copper, tin-plated, mounting pad for cathode 1 cm^2.

[3] Device mounted on a ceramic PCB, Al_2O_3, standard footprint.

[4] Soldering point of cathode tab.

© Nexperia B.V. 2007. All rights reserved.

Downloaded from Arrow.com.

7. Characteristics

Table 7. Characteristics

T_j = 25 °C unless otherwise specified.

Symbol	Parameter	Conditions		Min	Typ	Max	Unit
V_F	forward voltage		[1]				
		I_F = 10 mA		-	-	0.9	V
		I_F = 100 mA		-	-	1.1	V
V_Z	working voltage	I_Z = 1 mA		95	-	105	V
r_{dif}	differential resistance	I_Z = 1 mA		-	-	700	Ω
I_R	reverse current	V_R = 76 V		-	-	0.2	µA
S_Z	temperature coefficient	I_Z = 1 mA		-	138	-	mV/K
C_d	diode capacitance	f = 1 MHz; V_R = 0 V		-	-	70	pF

[1] Pulse test: $t_p \leq 300$ µs; $\delta \leq 0.02$.

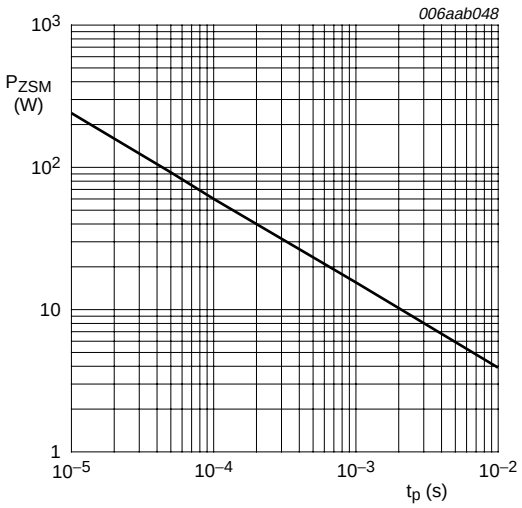

T_j = 25 °C (prior to surge)

Fig 2. Non-repetitive peak reverse power dissipation as a function of pulse duration; maximum values

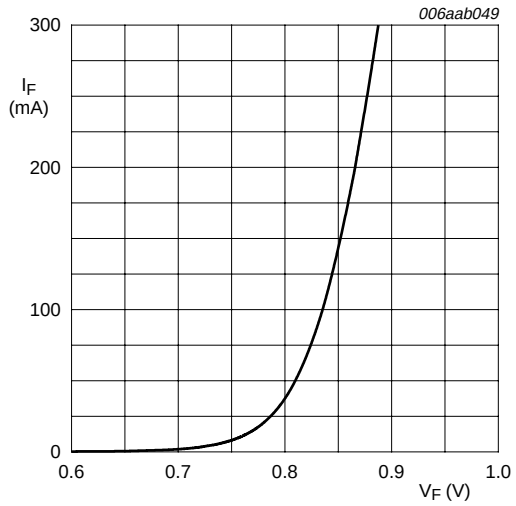

T_j = 25 °C

Fig 3. Forward current as a function of forward voltage; typical values

© Nexperia B.V. 2007. All rights reserved.

Downloaded from Arrow.com.

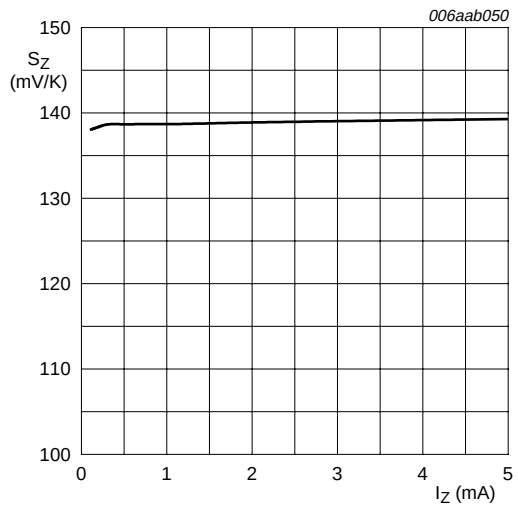

T_j = 25 °C to 150 °C

Fig 4. Temperature coefficient as a function of working current; typical values

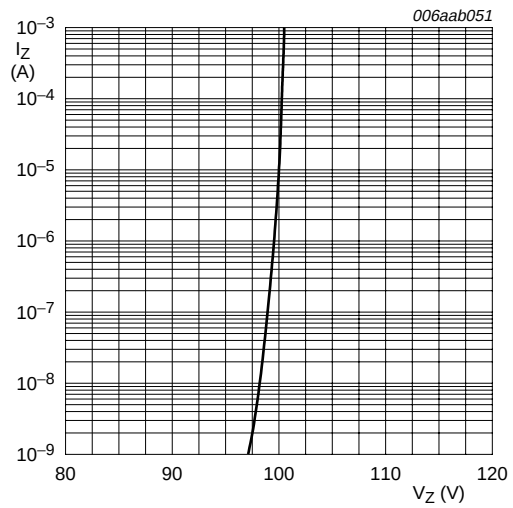

T_j = 25 °C

Fig 5. Working current as a function of working voltage; typical values

8. Application information

High-voltage Zener diodes can be used as overvoltage protection diodes for Integrated Circuits (IC) due to their ability to cut off the applied voltage at a well-defined value. One important application is the protection of EL driver circuits where a driver IC is connected to an EL foil. Since both the foil as well as the IC are sensitive against voltage overstress, it is necessary to install an additional protection device in the circuit. Commonly, a peak-to-peak voltage of 220 V should not be exceeded, such that two 100 V diodes in back-to-back configuration are used.

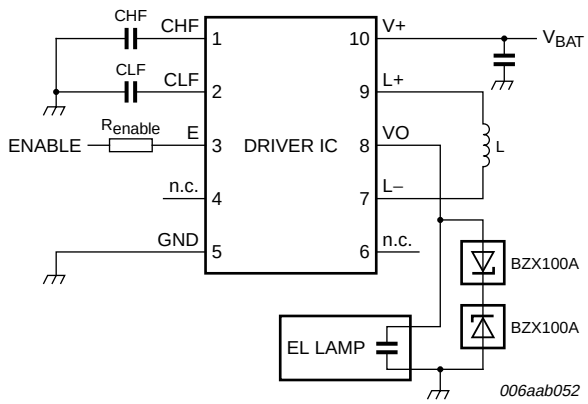

Fig 6. Application diagram

© Nexperia B.V. 2007. All rights reserved.

Downloaded from Arrow.com.

9. Test information

9.1 Quality information

This product has been qualified in accordance with the Automotive Electronics Council (AEC) standard Q101 (Stress qualification for discrete semiconductors) and is suitable for use in automotive critical applications.

10. Package outline

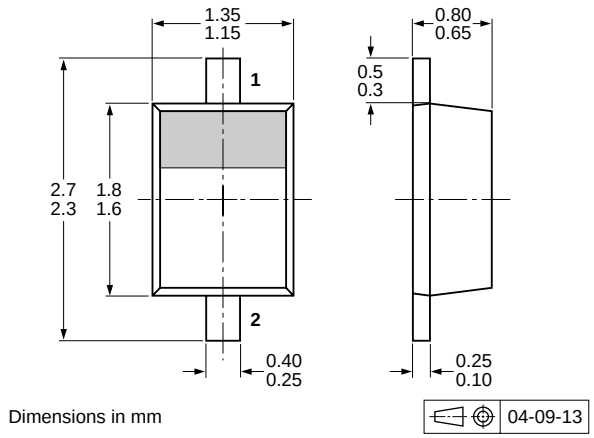

Fig 7. Package outline SOD323F (SC-90)

11. Packing information

Please refer to packing information on www.nexperia.com.

© Nexperia B.V. 2007. All rights reserved.

Downloaded from Arrow.com.

12. Soldering

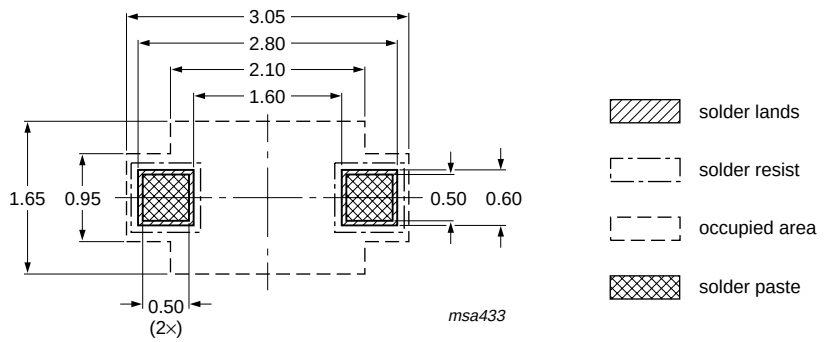

Reflow soldering is the only recommended soldering method.

Dimensions in mm

Fig 8. Reflow soldering footprint SOD323F (SC-90)

© Nexperia B.V. 2007. All rights reserved.

Downloaded from Arrow.com.

13. Revision history

Table 9. Revision history

Document ID	Release date	Data sheet status	Change notice	Supersedes
BZX100A	20070530	Product data sheet	-	-

© Nexperia B.V. 2007. All rights reserved.

Downloaded from Arrow.com.

14. Legal information

14.1 Data sheet status

Document status[1][2]	Product status[3]	Definition
Objective [short] data sheet	Development	This document contains data from the objective specification for product development.
Preliminary [short] data sheet	Qualification	This document contains data from the preliminary specification.
Product [short] data sheet	Production	This document contains the product specification.

[1] Please consult the most recently issued document before initiating or completing a design.

[2] The term 'short data sheet' is explained in section "Definitions".

[3] The product status of device(s) described in this document may have changed since this document was published and may differ in case of multiple devices. The latest product status information is available on the Internet at URL http://www.nexperia.com.

14.2 Definitions

Draft — The document is a draft version only. The content is still under internal review and subject to formal approval, which may result in modifications or additions. Nexperia does not give any representations or warranties as to the accuracy or completeness of information included herein and shall have no liability for the consequences of use of such information.

Short data sheet — A short data sheet is an extract from a full data sheet with the same product type number(s) and title. A short data sheet is intended for quick reference only and should not be relied upon to contain detailed and full information. For detailed and full information see the relevant full data sheet, which is available on request via the local Nexperia sales office. In case of any inconsistency or conflict with the short data sheet, the full data sheet shall prevail.

14.3 Disclaimers

General — Information in this document is believed to be accurate and reliable. However, Nexperia does not give any representations or warranties, expressed or implied, as to the accuracy or completeness of such information and shall have no liability for the consequences of use of such information.

Right to make changes — Nexperia reserves the right to make changes to information published in this document, including without limitation specifications and product descriptions, at any time and without notice. This document supersedes and replaces all information supplied prior to the publication hereof.

Suitability for use — Nexperia products are not designed, authorized or warranted to be suitable for use in medical, military, aircraft, space or life support equipment, nor in applications where failure or malfunction of a Nexperia product can reasonably be expected to result in personal injury, death or severe property or environmental damage. Nexperia accepts no liability for inclusion and/or use of Nexperia products in such equipment or applications and therefore such inclusion and/or use is at the customer's own risk.

Applications — Applications that are described herein for any of these products are for illustrative purposes only. Nexperia makes no representation or warranty that such applications will be suitable for the specified use without further testing or modification.

Limiting values — Stress above one or more limiting values (as defined in the Absolute Maximum Ratings System of IEC 60134) may cause permanent damage to the device. Limiting values are stress ratings only and operation of the device at these or any other conditions above those given in the Characteristics sections of this document is not implied. Exposure to limiting values for extended periods may affect device reliability.

Terms and conditions of sale — Nexperia products are sold subject to the general terms and conditions of commercial sale, as published at http://www.nexperia.com/profile/terms, including those pertaining to warranty, intellectual property rights infringement and limitation of liability, unless explicitly otherwise agreed to in writing by Nexperia. In case of any inconsistency or conflict between information in this document and such terms and conditions, the latter will prevail.

No offer to sell or license — Nothing in this document may be interpreted or construed as an offer to sell products that is open for acceptance or the grant, conveyance or implication of any license under any copyrights, patents or other industrial or intellectual property rights.

14.4 Trademarks

Notice: All referenced brands, product names, service names and trademarks are the property of their respective owners.

© Nexperia B.V. 2007. All rights reserved.

Downloaded from Arrow.com.

15. Contents

1 Product profile 1
1.1 General description. 1
1.2 Features 1
1.3 Applications 1
1.4 Quick reference data. 1
2 Pinning information 1
3 Ordering information 2
4 Marking 2
5 Limiting values 2
6 Thermal characteristics. 3
7 Characteristics 4
8 Application information. 5
9 Test information 6
9.1 Quality information 6
10 Package outline 6
11 Packing information. 6
12 Soldering 7
13 Revision history 8
14 Legal information 9
14.1 Data sheet status 9
14.2 Definitions 9
14.3 Disclaimers 9
14.4 Trademarks 9
15 Contents 10

Please be aware that important notices concerning this document and the product(s) described herein, have been included in section 'Legal information'.

© Nexperia B.V. 2007. **All rights reserved.**

For more information, please visit: http://www.nexperia.com
For sales office addresses, please send an email to:
salesaddresses@nexperia.com

Date of release: 30 May 2007
Document identifier: BZX100A

Downloaded from Arrow.com.