SERIES: PDQE15-D | DESCRIPTION: DC-DC CONVERTER

FEATURES

- 15 W isolated output
- ultra-wide input voltage range
- single/dual regulated outputs
- 1500 Vdc isolation
- extended temperature range (-40~105°C)
- input under-voltage protection
- output short circuit, over-current, over-voltage protection
- DIP package
- EN 62368-1, UL 62368-1

MODEL	input voltage typ (Vdc)	input voltage range (Vdc)	output voltage (Vdc)	output current min (mA)	output current max (mA)	output power max (W)	ripple & noise[1] max (mVp-p)	efficiency[2] typ (%)
PDQE15-Q24-S3-D[3]	24	9~36	3.3	0	4000	13.2	100	88
PDQE15-Q24-S5-D[3]	24	9~36	5	0	3000	15	100	90
PDQE15-Q24-S12-D[3]	24	9~36	12	0	1250	15	100	90
PDQE15-Q24-S15-D[3]	24	9~36	15	0	1000	15	100	91
PDQE15-Q24-S24-D[3]	24	9~36	24	0	625	15	100	91
PDQE15-Q24-D5-D[3]	24	9~36	±5	0	±1500	15	200	87
PDQE15-Q24-D12-D[3]	24	9~36	±12	0	±625	15	200	90
PDQE15-Q24-D15-D[3]	24	9~36	±15	0	±500	15	200	90
PDQE15-Q24-D24-D[3]	24	9~36	±24	0	±312	15	200	89
PDQE15-Q48-S3-D	48	18~75	3.3	0	4000	13.2	100	88
PDQE15-Q48-S5-D	48	18~75	5	0	3000	15	100	90
PDQE15-Q48-S12-D	48	18~75	12	0	1250	15	100	91
PDQE15-Q48-S15-D	48	18~75	15	0	1000	15	100	91
PDQE15-Q48-S24-D	48	18~75	24	0	625	15	100	91
PDQE15-Q48-D5-D	48	18~75	±5	0	±1500	15	200	86
PDQE15-Q48-D12-D	48	18~75	±12	0	±625	15	200	90
PDQE15-Q48-D15-D	48	18~75	±15	0	±500	15	200	90
PDQE15-Q48-D24-D	48	18~75	±24	0	±312	15	200	90

Notes:
1. From 5~100% load, nominal input, 20 MHz bandwidth oscilloscope, with 10 μF tantalum and 1 μF ceramic capacitors on the output. From 0~5% load, ripple and noise is <5% Vo.
2. Measured at nominal input voltage, full load.
3. Model is not CE or UKCA certified.
4. All specifications are measured at Ta=25°C, humidity < 75%, nominal input voltage, and rated output load unless otherwise specified.

Please read our datasheet & drawing disclaimer here.
Downloaded from Arrow.com.

PART NUMBER KEY

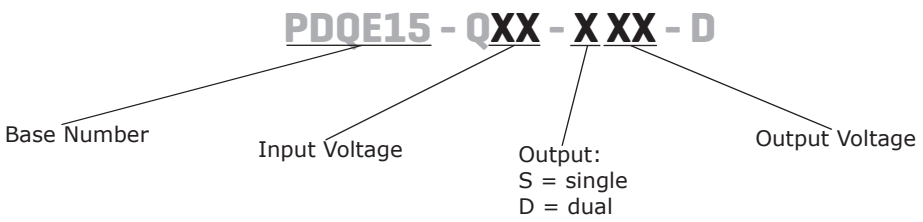

INPUT

parameter	conditions/description		min	typ	max	units
operating input voltage	24 Vdc input models		9	24	36	Vdc
	48 Vdc input models		18	48	75	Vdc
start-up voltage	24 Vdc input models				9	Vdc
	48 Vdc input models				18	Vdc
surge voltage	for maximum of 1 second					
	24 Vdc input models		-0.7		50	Vdc
	48 Vdc input models		-0.7		100	Vdc
under voltage shutdown	24 Vdc input models		5.5	6.5		Vdc
	48 Vdc input models		12	15.5		Vdc
current	24 Vdc input models	3.3 Vdc output models			640	mA
		5, 12 Vdc output models			710	mA
		15, 24 Vdc output models			703	mA
		all dual output models		958		mA
	48 Vdc input models	3.3 Vdc output models			320	mA
		5 Vdc output models			356	mA
		12, 15, 24 Vdc output models			352	mA
		all dual output models		703		mA
remote on/off (CTRL)[5]	turn on (CTRL pin open or pulled high (3.5~12 Vdc))					
	turn off (CTRL pin pulled low to GND (0~1.2 Vdc))					
	input current when switched off			2	7	mA
filter	Pi filter					

Notes: 5. The voltage of the CTRL pin is referenced to input GND pin.

OUTPUT

parameter	conditions/description	min	typ	max	units
maximum capacitive load[6]	3.3, 5 Vdc output models			4,700	µF
	12 Vdc output models			1,000	µF
	15 Vdc output models			820	µF
	24 Vdc output models			270	µF
	±5 Vdc output models			1,500	µF
	±12 Vdc output models			470	µF
	±15 Vdc output models			330	µF
	±24 Vdc output models			200	µF
voltage accuracy[7]	single output models: 0% to full load		±1	±3	%
	dual output models: 5% to full load		±1	±3	%
line regulation	from low line to high line, full load				
	positive outputs		±0.2	±0.5	%
	negative outputs		±0.4	±1	%
load regulation[8]	from 5% to full load		±0.5	±1	%

Note: 6. Tested at input voltage range and full load.
7. At 0~5% load, the max output voltage accuracy for the dual output models is ±4%.
8. At 0~100% load, the max load regulation for the dual output models is ±5%.

Downloaded from Arrow.com.

OUTPUT (CONTINUED)

parameter	conditions/description	min	typ	max	units
cross regulation	dual output models: main output 50% load secondary output from 10~100% load			±5	%
start-up time	nominal input, constant resistive load		10		ms
adjustability[9]	see application notes		±10		%
switching frequency[10]	PWM mode 3.3, 5 Vdc output models all other models		 300 270		 kHz kHz
transient recovery time	25% load step change, nominal input voltage		300	500	µs
transient response deviation	25% load step change, nominal input voltage 3.3, 5 Vdc output models ±5 Vdc output models all other models		 ±3 ±3 ±3	 ±7 ±8 ±5	 % % %
temperature coefficient	at full load			±0.03	%/°C

Note: 9. For single output models only.
10. Value is based on full load. At loads <50%, the switching frequency decreases with decreasing load

PROTECTIONS

parameter	conditions/description	min	typ	max	units
over voltage protection		110		160	%
over current protection	single output models dual output models	110 110	150 200	190 270	% %
short circuit protection	hiccup, continuous, self recovery				

SAFETY AND COMPLIANCE

parameter	conditions/description	min	typ	max	units
isolation voltage	input to output for 1 minute at 1 mA input/output to case for 1 minute at 1 mA	1,500 1,000			Vdc Vdc
isolation resistance	input to output at 500 Vdc	1,000			MΩ
isolation capacitance	input to output, 100 kHz / 0.1 V		2,000		pF
safety approvals[11]	certified to 62368-1: IEC, EN, UL				
conducted emissions	CISPR32/EN55032, class A (no external circuit); class B (external circuit required, see Figure 3-b, 4-b)				
radiated emissions	CISPR32/EN55032, class A (no external circuit); class B (external circuit required, see Figure 3-b, 4-b)				
MTBF	as per MIL-HDBK-217F, 25°C	1,000,000			hours
RoHS	yes				

Note: 11. UL approval only on single output models.

Downloaded from Arrow.com.

ENVIRONMENTAL

parameter	conditions/description	min	typ	max	units
operating temperature	see derating curves 3.3, 5 Vdc output models all other models	 -40 -40		 95 105	 °C °C
storage temperature		-55		125	°C
storage humidity	non-condensing	5		95	%
vibration	10~150 Hz, 0.75 mm for 90 minutes on each axis		5		G

DERATING CURVES

TEMPERATURE DERATING CURVE
3.3, 5 Vdc input models

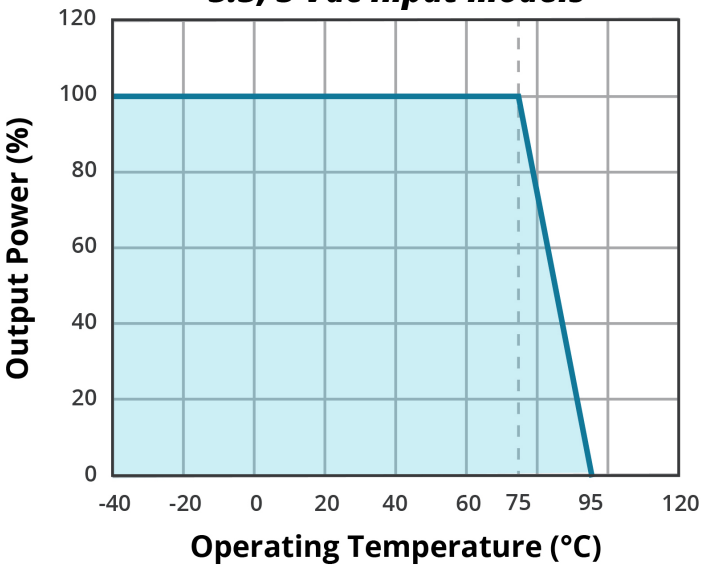

TEMPERATURE DERATING CURVE
12, 15, 24 Vdc input models

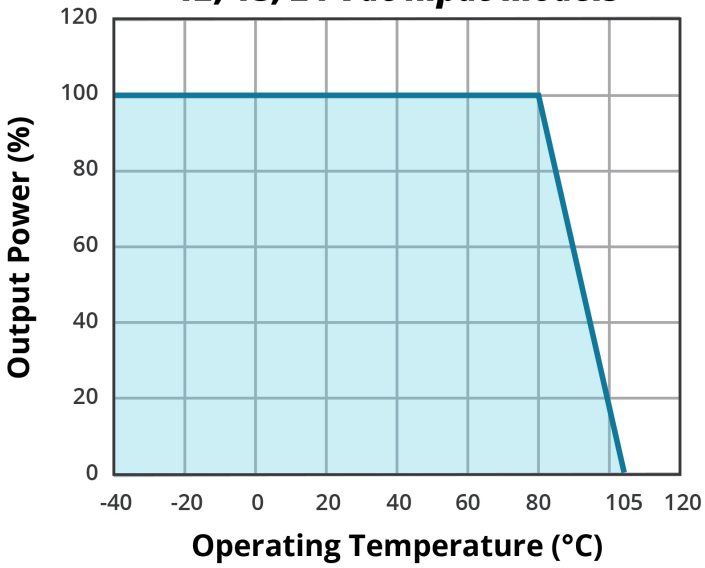

TEMPERATURE DERATING CURVE
all other input models

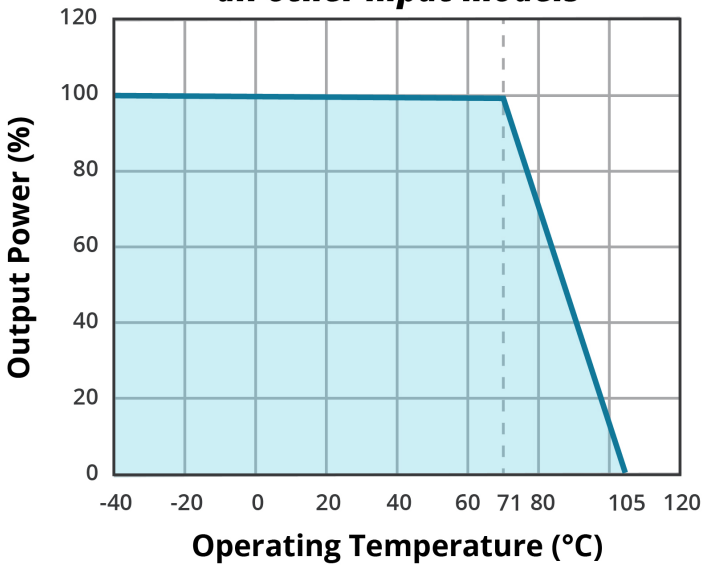

Downloaded from Arrow.com.

SOLDERABILITY

parameter	conditions/description	min	typ	max	units
hand soldering	1.5 mm from case for 10 seconds			300	°C
wave soldering	see wave soldering profile			260	°C

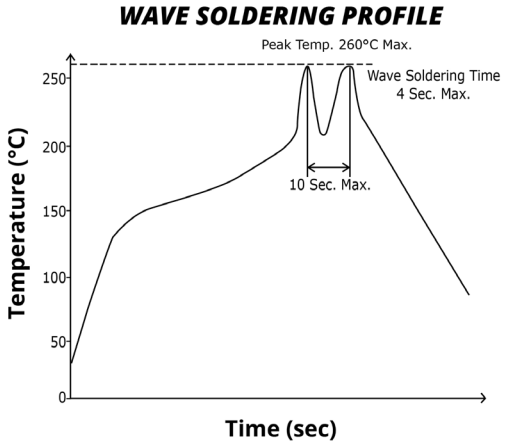

MECHANICAL

parameter	conditions/description	min	typ	max	units
dimensions	25.40 x 25.40 x 11.70 [1.000 x 1.000 x 0.461 inch]				mm
case material	aluminum alloy				
weight			15		g

MECHANICAL DRAWING

units: mm [inch]
tolerance: ±0.50[±0.020]
pin diameter tolerance: ±0.10[±0.004]

PIN CONNECTIONS		
PIN	Function	
	Single	Dual
1	CTRL	CTRL
2	GND	GND
3	Vin	Vin
4	+Vo	+Vo
5	trim	0V
6	0V	-Vo

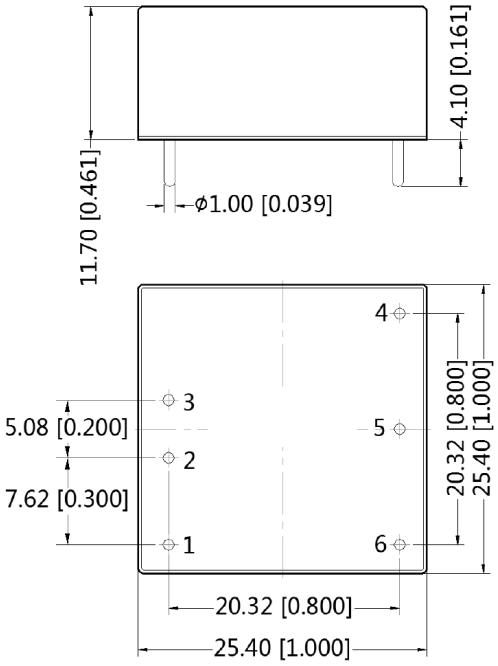

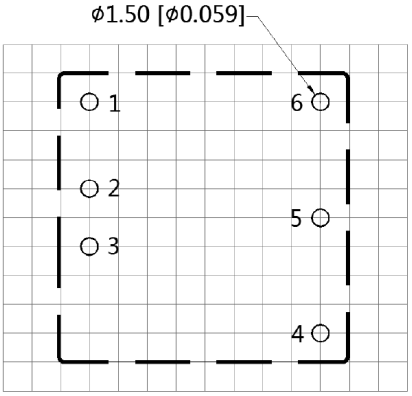

Note:Grid 2.54*2.54mm
Recommended PCB Layout
Top View

Downloaded from Arrow.com.

APPLICATION CIRCUIT

This series has been tested according to the following recommended circuits (Figures 1 & 2) before leaving the factory. If you want to further reduce the input and output ripple, you can increase the input and output capacitors or select capacitors of low equivalent series resistance provided that the capacitance is less than the maximum capacitive load of the model.

Figure 1
Single Output Models

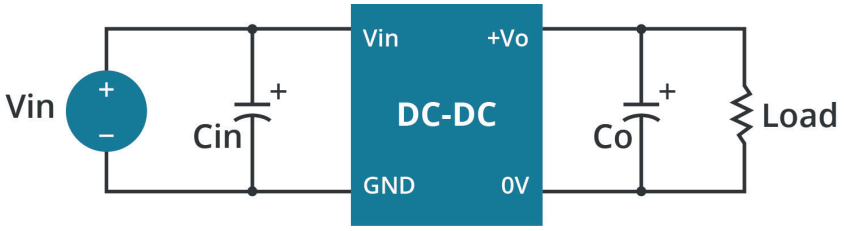

Table 1

Vout (Vdc)	Cin (µF)	Cout (µF)
3.3/5/12/15	100	100
24	100	47

Figure 2
Dual Output Models

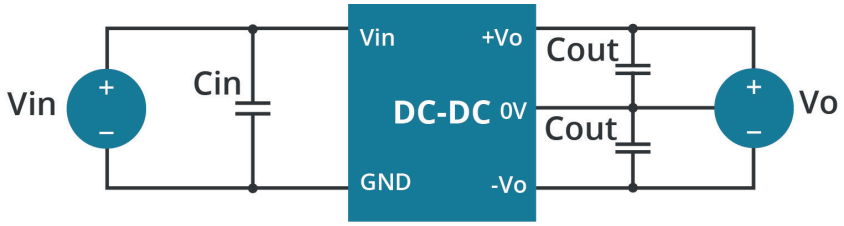

Table 2

Vin (Vdc)	Cin (µF)	Cout (µF)
24	100	10
48	10~47	10

EMC RECOMMENDED CIRCUIT

Figure 3
Single Output Models

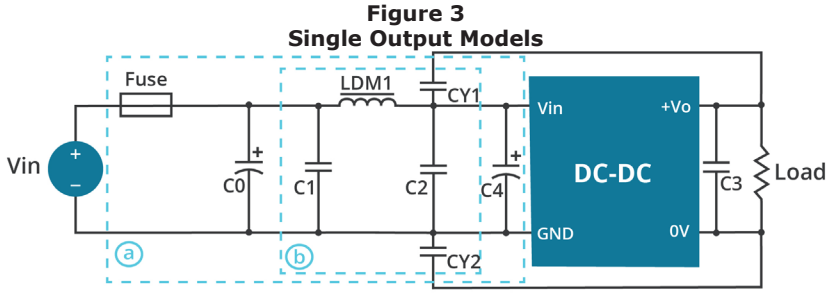

Table 3

Recommended External Circuit Components		
Vin (Vdc)	24	48
FUSE	choose according to actual input current	
C0, C4	330 µF / 50 V	330 µF / 100 V
C1, C2	4.7 µF / 50 V	4.7 µF / 100 V
C3	Refer to the Cout in Table 1	
LDM1	2.2 µH / 4 A	2.2 µH / 2 A
CY1, CY2	1 nF / 2 kV	

Figure 4
Dual Output Models

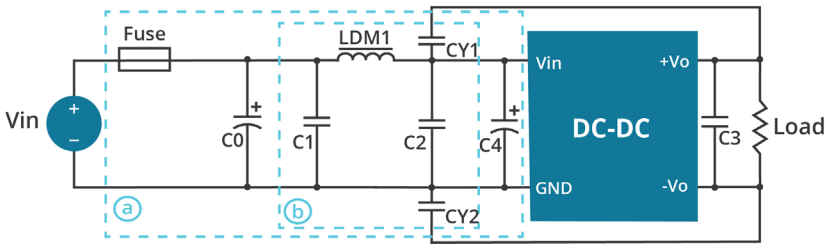

Table 4

Recommended External Circuit Components		
Vin (Vdc)	24	48
FUSE	choose according to actual input current	
C0, C4	330 µF / 50 V	330 µF / 100 V
C1, C2	4.7 µF / 50 V	4.7 µF / 100 V
C3	Refer to the Cout in Table 2	
LDM1	4.7 µH	
CY1, CY2	1 nF / 2 kV	

Downloaded from Arrow.com.

APPLICATION NOTES

Leave open if not used.

Figure 5

Trim up

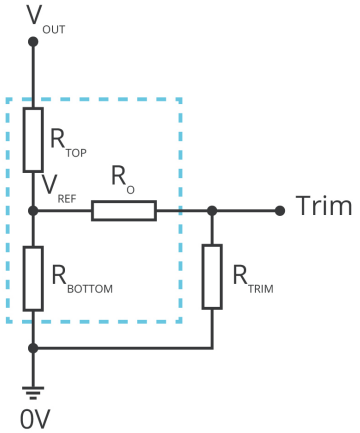

Trim down

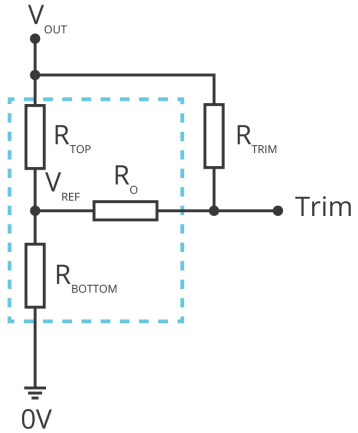

$$R_{TRIM} = \frac{a \cdot R_{BOTTOM}}{R_{BOTTOM} - a} - R_O \qquad a = \frac{V_{REF}}{V_{OUT} - V_{REF}} \cdot R_{TOP}$$

Formula for Trim up

$$R_{TRIM} = \frac{a \cdot R_{TOP}}{R_{TOP} - a} - R_O \qquad a = \frac{V_{OUT} - V_{REF}}{V_{REF}} \cdot R_{BOTTOM}$$

Formula for Trim down

Table 5

V_{OUT}	R_{TOP}	R_{BOTTOM}	R_O	V_{REF}
(Vdc)	(kΩ)	(kΩ)	(kΩ)	(V)
3.3	4.801	2.87	15	1.25
5	2.894	2.87	10	2.5
12	11.000	2.87	17.4	2.5
15	14.494	2.87	17.4	2.5
24	24.872	2.87	20	2.5

Note: Value for R_{TOP}, R_{BOTTOM}, R_O, and V_{REF} refer to Table 3 (fixed internal values).
R_{TRIM}: Trim resistance
a: User-defined parameter, no actual meanings
V_{OUT}: Nominal output voltage

Downloaded from Arrow.com.

REVISION HISTORY

rev.	description	date
1.0	initial release	05/16/2019
1.01	features and safety line updated, packaging removed	01/14/2021
1.02	derating curves and circuit figures updated	07/29/2021
1.03	Vref updated for 3.3 Vdc output model	02/07/2022
1.04	CE certification updated for 24V models	10/27/2022
1.05	safeties updated	10/02/2024

The revision history provided is for informational purposes only and is believed to be accurate.

CUI INC
a bel group

Headquarters
15575 SW Sequoia Pkwy #100
Portland, OR 97224
800.275.4899

Fax 503.612.2383
cui.com
techsupport@cui.com

CUI offers a two (2) year limited warranty. Complete warranty information is listed on our website.

CUI reserves the right to make changes to the product at any time without notice. Information provided by CUI is believed to be accurate and reliable. However, no responsibility is assumed by CUI for its use, nor for any infringements of patents or other rights of third parties which may result from its use.

CUI products are not authorized or warranted for use as critical components in equipment that requires an extremely high level of reliability. A critical component is any component of a life support device or system whose failure to perform can be reasonably expected to cause the failure of the life support device or system, or to affect its safety or effectiveness.

Downloaded from Arrow.com.