MICRO SWITCH
FED. MFR. CODE 91929

SWITCH–TOGGLE

CATALOG LISTING
4TL66-1L

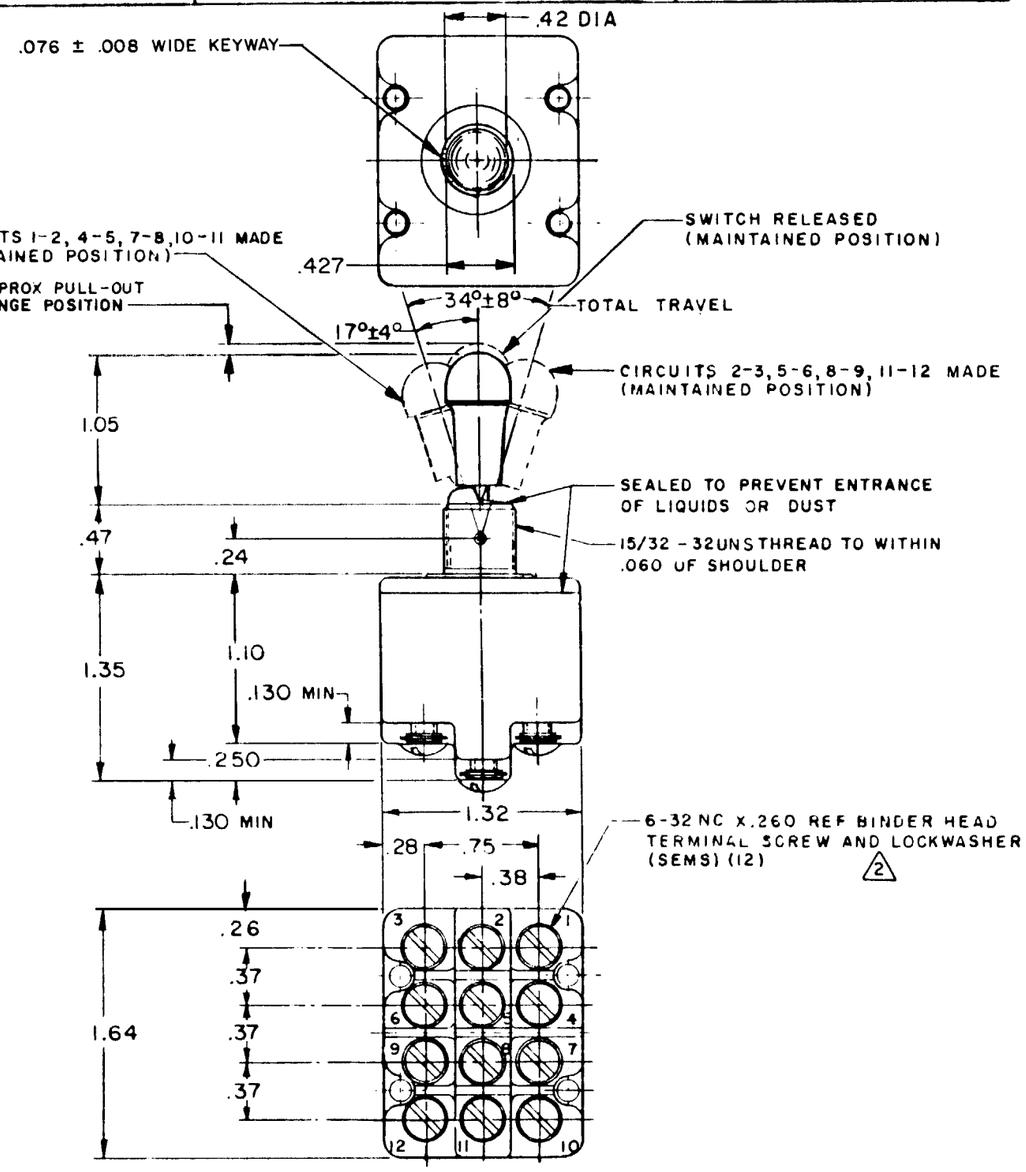

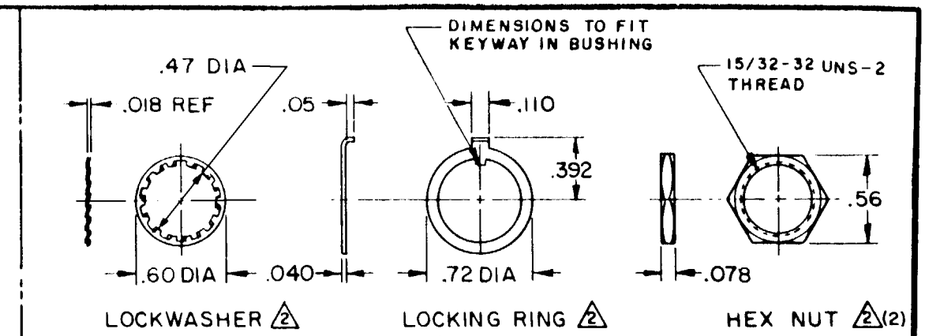

CIRCUIT DIAGRAM

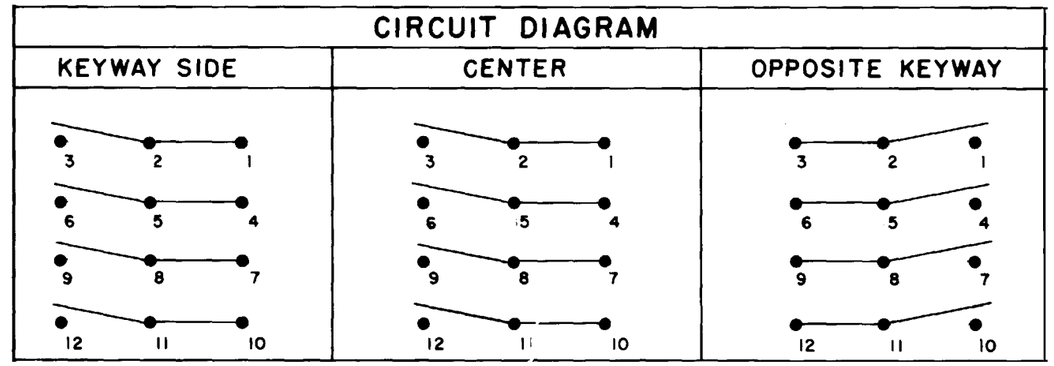

NOTES
1 - SWITCH IS CAPABLE OF WITHSTANDING A TEMPERATURE OF 160°F CONTINUOUSLY AT FULL RATED LOAD
2 - FURNISHED UNASSEMBLED
3 - MICRO SWITCH CATALOG LISTING AND CIRCUIT DESIGNATION MARKED ON SIDE OF SWITCH
4 - FOR TERMINAL COVER SEE MICRO SWITCH CAT. LIST. 5PA9

THIS DRAWING COVERS A PROPRIETARY ITEM AND IS THE PROPERTY OF MICRO SWITCH A DIVISION OF MINNEAPOLIS HONEYWELL REGULATOR CO. THIS DRAWING IS NOT TO BE COPIED OR USED WITHOUT THE APPROVAL OF MICRO SWITCH

ELECTRICAL DATA

MILITARY RATING (AMPS)

CONTINUOUS	RESISTIVE LOAD DC VOLTS 28	125	250	RESISTIVE LOAD AC VOLTS 125	250	LAMP LOAD 28 VDC	125 VAC	INDUCTIVE LOAD 28 VDC	125 VAC
	20	.75	.5	15	6	5	4	12	15

SCALE —
DO NOT SCALE PRINT
UNLESS OTHERWISE SPECIFIED
DIMENSIONS ARE IN INCHES
TOLERANCES ARE:
ONE PLACE (.0) ±.030
TWO PLACE (.00) ±.015
THREE PLACE (.000) ±.005
ANGLES ± —
WEIGHT .19 LB EST

L191
15A 125, 250, 277 VAC
1/2HP 125 VAC
1HP 250, 277 VAC
5A 125 VAC "L"

DRAWING NUMBER 4TL66-1L
PAGE 1 OF 1
ISSUE M 12
REPLACES
RELEASE NO. SR 10350

REVISIONS
A CO-81150 J A K 19 JUN 95
B CO-94444 J J A 23 NOV 99
C 0042426 KVS 14AUG08

DRAWN DWV 14 MAY 62
CHECKED
NSE 16 MAY 62
CHECKED
DRAWN 16 MAY 62
CHECKED
RASTER

Downloaded from Arrow.com.