Bluetooth ® low energy Module

Bluetooth® 5.0 low energy

EJ2840MA2

Data Sheet

By purchase of any products described in this document, the customer is deemed to understand and accept contents of this document.

The ***Bluetooth***® word mark and logos are owned by the ***Bluetooth*** SIG, Inc. and any use of such marks by KAGA FEI Co., Ltd. is under license.

Copyright 2024 KAGA FEI Co., Ltd.

Downloaded from Arrow.com.

Contents

1. Document constituent list ····· **3**
2. General Items ····· **4**
2.1. Scope ····· 4
2.2. Description ····· 4
3. Absolute maximum ratings ····· **11**
4. Electrical characteristics ····· **12**
4.1. Recommendation operating range ····· 12
4.2. DC Specifications ····· 12
4.3. RF Specifications ····· 13
5. Circuit Schematic ····· **14**
5.1. Block Diagram ····· 14
5.2. Sample circuits ····· 15
5.3. Reference Circuits ····· 16
6. Outline/Appearance ····· **17**
7. Pin Layout ····· **18**
8. Handling Precaution ····· **19**
8.1. Environment conditions for use and storage ····· 19
8.2. Conditions for handling of products ····· 19
9. Packaging Specification ····· **21**
9.1. Packaging Specification ····· 21
9.2. Tape specification ····· 22
9.3. Reel specification ····· 23
9.4. Taping performance ····· 24
10. Antenna application note ····· **25**
10.1. Recommended module mounting example ····· 25
10.2. Other module mounting examples ····· 26
10.3. Directional characteristics example (when mounted on evaluation board) ····· 27
11. Design guide ····· **28**
11.1. Battery operation ····· 28
11.2. Pattern Design Guide ····· 28
11.2.1. Power Supply System ····· 28
11.2.2. Bypass Capacitor Layout ····· 28
11.2.3. GND Pattern ····· 28
Precautions ····· **183**

Copyright 2024 KAGA FEI Co., Ltd.

Downloaded from Arrow.com.

1.Document constituent list

Control name	Control No.	Document Page
General Items	KM-AG-A223027	1/7 - 7/7
Absolute maximum ratings	KM-AM-A223027	1/1
Electrical characteristics	KM-AE-A223027	1/2 - 2/2
Circuit schematic	KM-MC-A223027	1/3 - 3/3
Outline / Appearance	KM-AD-A223027	1/1
Pin Layout	KM-BA-A223027	1/1
Handling Precaution	MQ-H-001	1/2 - 2/2
Packaging Specification	KM-BB-A223027	1/4 - 4/4
Antenna application note	-	1/3 - 3/3
Design guide	-	1/1
FUNCTIONAL SPECIFICATION	-	1/25 - 25/25
Command API	-	1/125 - 125/125
Precautions	MQ-P-001	1/1

Revision History

08-Aug. 2023 > Ver.1.0 Release
22-Feb. 2024 > Ver.1.1 Update
12-Mar. 2024 > Ver.1.2 Update

Copyright 2024 KAGA FEI Co., Ltd.

Downloaded from Arrow.com.

2.General Items

2.1.Scope

This specification (“Specification”) applies to the hybrid IC “EJ2840MA2”,
a ***Bluetooth***® 5.0 low energy module (“Product”) manufactured by KAGA FEI Co., Ltd. (“KAGA FEI”)

2.2.Description

a) User Code : EJ2840MA2…nRF52840-CKAA-F-R
MODEL : EJ2840
*User Code may be changed for mass production or other cases.
Note: Please use the Part Number (EJ2840MA2) to order this product

b) Chip : Nordic nRF52840 (1MB Flash, 256KB RAM)

c) Function : Radio frequency transceiver Module. Bluetooth®5.0 conformity.

d) Application : IoT devices, Health & Fitness Equipment, Sensor, Toys

e) Structure : Hybrid IC loaded with silicon monolithic semiconductor
Regarding the containment of hazardous substance in this Product,
it conforms to RoHS Directive.

f) Outline : 5.1 x 11.3 x 1.3 mm
28-pin Land Grid Array

g) Marking : Part Number, Lot Number and manufacturer on Shielding Case

h) Country of origin : Japan or Thailand

i) Packaging : Packaging method: Tape & reel + aluminum moisture barrier bag
Packaging unit: 2000
* The samples may have different packing specification.

Copyright 2024 KAGA FEI Co., Ltd.

Downloaded from Arrow.com.

j) Notes:

a. Limitation of Warranty

1) KAGA FEI provides warranties only if the Product is operated under the condition set forth in this Specification. Please note that KAGA FEI shall not be liable for any defect and/or malfunction arising from use of the Product under the terms and conditions other than the operating conditions hereof. In addition, when this Product is used under environmental conditions such as over voltage which is not guaranteed, it may be destroyed in short mode. To ensure the security of customer's product, please add an extra fuse or/and a protection circuit for over voltage.
2) This Product is designed for use in products which comply with Bluetooth® Specifications. KAGA FEI disclaims and is not responsible for any liability concerning infringement by this Product under any intellectual property right owned by third party in case the customer uses this Product in any product which does not comply with Bluetooth® Specifications (the "non-complying products"). Furthermore, KAGA FEI warrants only that this Product complies with this Specification and does not grant any other warranty including warranty for application of the non-complying products.
3) In some cases, KAGA FEI may use replacements as component parts of Products. Such replacement shall apply only to component part of Products, which KAGA FEI deems it possible to replace or substitute according to (i) Scope of Warranty provided in this specification (e.g. Electric Characteristics, Outline, dimension, Conditions of Use, Reliability Tests, Official Standard (Type Approvals etc.)) and (ii) Quality of Products. KAGA FEI also ensures traceability of such replacement on production lot basis.

b. Instruction for Use (CAUTION)

1) This Product is not designed to be radiation-resistant. Please do not expose Product to radiation.
2) Communication between this Product and other might not be established nor maintained depending upon radio environment or operating condition of this Product and other products with wireless technology.
3) This Product operates in the unlicensed ISM band at 2.4GHz. In case this Product is used around the other wireless devices which operate in same frequency band of this Product, there is a possibility that interference occurs between this Product and such other devices. If such interference occurs, please stop the operation of other devices or relocate this Product before using this Product or do not use this Product around the other wireless devices.
4) This Product mentioned in this Specification is manufactured for use in Health & Fitness Equipment, Sensor, Toys. Before using this Product in any special equipment (such as medical equipment, space equipment, aircraft, disaster prevention equipment), where higher safety and reliability are duly required, the applicability and suitability of this Product must be fully evaluated by the customer at its sole risk to ensure correct and safety operation of those special equipments. Also, evaluation of the safety function of this Product even for use in general electronics equipment shall be thoroughly made and when necessary, a protective circuit shall be added in design stage, all at the customer's sole risk.

Copyright 2024 KAGA FEI Co., Ltd.

Downloaded from Arrow.com.

5) Japan Regulatory Information

This module is approved with the specific antenna on this module. Please ensure that your product can also bear a label with the following information. If the product is so small that it is not practicable to place the label, you can also place it in the instruction manual and package. The mark diameter shall be easily legible without using a device such as light microscopes.

R 005-103131

It is recommended to include the following sentence in the user manual of your product:
This product installs a radio system which has been approved as a radio station in a low power data communication system based on the Radio Law.
EJ2840: 005-103131

6) Canada Regulatory Information

a) This device complies with Innovation, Science and Economic Development Canada's applicable license-exempt RSSs. Operation is subject to the following two conditions:
(1) this device may not cause interference, and
(2) this device must accept any interference, including interference that may cause undesired operation of the device.

Le présent appareil est conforme aux CNR d'Innovation, Sciences et Développement économique Canada applicables aux appareils radio exempts de licence. L'exploitation est autorisée aux deux conditions suivantes:
1) l'appareil ne doit pas produire de brouillage;
2) l'utilisateur de l'appareil doit accepter tout brouillage radioélectrique subi, même si le brouillage est susceptible d'en compromettre le fonctionnement.

b) This product is certified as type of the portable device with Innovation, Science and Economic Development Canada Rules. To maintain compliance with RF Exposure requirement, please use within specification of this product and have a separation distance of minimum 15 mm between the user and/or bystander and the antenna and /or radiating element. This distance ensures that the output power (e.i.r.p.) of EJ2840 is below the SAR evaluation Exemption limits defined in RSS-102 issue 5.

Ce produit est certifié comme type de l'appareil portable avec Innovation, Sciences et Développement économique Canada Règles. Pour maintenir l'acquiescement avec exigence Exposition de RF, veuillez utiliser dans spécification de ce produit et respecter une distance de séparation d'au moins 15 mm entre l'utilisateur et / ou un tiers et l'antenne et / ou l'élément rayonnant. Cette distance garantit que la puissance de sortie (p.i.r.e.) d EJ2840 est inférieure aux limites d'exemption de l'évaluation SAR définies dans le numéro 5 de la norme RSS-102.

c) Please notify certified ID by either one of the following methods on your product.
Specifiez ID certifiée dans votre produit par une de méthode suivante.
-Contains Transmitter module IC: 28568-EJ2840
-Contains IC: 28568-EJ2840

d) Please indicate your product name at any location on the exterior of the host product or product packaging or product literature, which shall be available with the host product or online.

Copyright 2024 KAGA FEI Co., Ltd.

Downloaded from Arrow.com.

e) Please include the following statements in rectangle on the user manual of the host device of this module;

> This device complies with Innovation, Science and Economic Development Canada license-exempt RSS standards. Operation is subject to the following two conditions:
> (1) This device may not cause interference.
> (2) This device must accept any interference, including interference that may cause undesired operation of the device.

> Le présent appareil est conforme aux CNR Innovation, Sciences et Développement économique Canada applicables auxappareils radio exempts de licence. L' exploitation est autorisée aux deux conditions suivantes :
> 1) l' appareil ne doit pas produire de brouillage;
> 2) l' utilisateur de l' appareil doit accepter tout brouillage radioélectrique subi, même si le brouillage est susceptible d' en compromettre le fonctionnement.

7) FCC Regulatory Information

a) This device complies with part 15 of the FCC Rules. Operation is subject to the following two conditions:
(1) This device may not cause harmful interference, and
(2) this device must accept any interference received, including interference that may cause undesired operation.

b) FCC ID is not indicated on this device since there is no space on it. FCC ID of this device is as below.
FCC ID: 2A6NFEJ2840

c) Please notify certified ID by either one of the following methods on your product.
-Contains Transmitter Module FCC ID: 2A6NFEJ2840
-Contains FCC ID: 2A6NFEJ2840

d) CAUTION: Changes or modifications not expressly approved by the party responsible for compliance could void the user's authority to operate the equipment.

e) This product is product is certified as type of the portable device with FCC Rules. To maintain compliance with RF Exposure requirement, please use within specification of this product.

f) The antenna used for this transmitter must not be co-located or operating in conjunction with any other antenna or transmitter.

g) This module can change the output power depending on the circumstances by the application software which is developed by module installer. Any end user cannot change the output power.

h) This device complies with part 15 of the FCC Rules.
-Part 15 Subpart C

Copyright 2024 KAGA FEI Co., Ltd.

Downloaded from Arrow.com.

i) The modular transmitter is only FCC authorized for the specific rule parts (Part 15 Subpart C) listed on the grant, and the host product manufacturer is responsible for compliance to any other FCC rules that apply to the host not covered by the modular transmitter grant of certification. The final host product still requires Part 15 Subpart B compliance testing with the modular transmitter installed.

j) Co-location of this module with other transmitters that operate simultaneously are required to be evaluated using the FCC multi transmitter procedures. When installing this module to your final devices, please make sure to carry out all the necessary evaluations according to the applicable guidelines like follows:
-for RF exposure: KDB 447498, KDB 996369 and any other relevant guidelines
-for EMC: KDB 996369 D04 and any other relevant guidelines

k) When you install this module to your final devices, please ensure that your final composite product complies with the applicable FCC rules in reference to a guidance in KDB 996369.

l) Antenna List
This module is approved along with the following antenna.
You cannot use any antennas other than the listed one because it deviates from the accredited conditions.

Manufacturer	KAGA FEI
Part No.	N/A (Printed on PCB) Dimensions 3.45mm x 4.7mm
Antenna Type	Monopole
Maximum Antenna Gain	-1.5dBi

m) Please include the following statements in rectangle on the user manual of the host device of this module;

This device complies with part 15 of the FCC Rules. Operation is subject to the following two conditions: (1) This device may not cause harmful interference, and (2) this device must accept any interference received, including interference that may cause undesired operation.

FCC CAUTION: Changes or modifications not expressly approved by the party responsible for compliance could void the user's authority to operate the equipment.

The antenna used for this transmitter must not be co-located or operating in conjunction with any other antenna or transmitter.

This product is certified as type of the portable device with FCC Rules. To maintain compliance with RF Exposure requirement, please use within specification of this product.

This product is certified as type of the portable device with FCC Rules. To maintain compliance with RF Exposure requirement, please use within specification of this product.

Copyright 2024 KAGA FEI Co., Ltd.

Downloaded from Arrow.com.

8) CE Regulatory Information
   a) When your end product installs this module, it is required to proceed additional certification processes before placing on the market in EU member states to make your products fully comply with relative EU standards.
   b) KAGA FEI can provide you the test reports of conducted measurement portion for the radio module. You can utilize the test reports for the certification processes of your end product as it requires radio testing.

c. Term of Support
1) In the case that customer requests KAGA FEI to customize the hardware of this Product in order to meet such customer's specific needs, KAGA FEI will make commercially reasonable effort to modify such hardware or software at customer's expense; provide however, the customer is kindly requested to agrees it doesn't mean that KAGA FEI has obligations to do so even in the case it is technically difficult for KAGA FEI.
2) Any failure arising out of this Product will be examined by KAGA FEI regardless of before or after mass production. Customer agrees that once such failure is turned out not to be responsible for KAGA FEI after aforesaid examination, some of the technical support shall be conducted by KAGA FEI at customer's expense; provided however, exact cost of this technical support can be agreed through the negotiation by the parties.
3) Do not alter hardware and/or software of this Product. Please note that KAGA FEI shall not be liable for any problem if it is caused by customer's alteration of Hardware without KAGA FEI's prior approvals.
4) KAGA FEI does not guarantee functions and performances which depend on the customer's firmware. KAGA FEI does not assume liabilities for defects and failures (i) in functions, performances and quality of the Customer's product incorporating the Products and (ii) which may occur as the Product is incorporated in the Customer's product.

d. Caution for Export Control

This Product may be subject to governmental approvals, consents, licenses, authorizations, declarations, filings, and registrations for export or re-export of the Product, required by Japanese Foreign Exchange and Foreign Trade Law (including related laws and regulations) and/or any other country's applicable laws or regulations related to export control.

In case you will export or re-export this Product, you are strongly recommended to check and confirm, before exporting or re-exporting, necessary procedures for export or re-export of this Product which is required by applicable laws and regulations, and if necessary, you have to obtain necessary and appropriate approvals or licenses from governmental authority at your own risk and expense.

e. Term of Warranty

KAGA FEI warrants only that this Product is in conformity with this Specification for one year after purchase and shall in no event give any other warranty.

f. Items of the Specification
1) Any question arising from the Specification shall be solved in good faith through mutual discussion by the parties hereof.
2) The language of this "General items" is Japanese and this "General items" shall be interpreted by Japanese Any copies of translation is a reference purpose only and is not binding on both parties hereto.

Copyright 2024 KAGA FEI Co., Ltd.

Downloaded from Arrow.com.

g. Special note

1) The latest errata and document released by Nordic Semiconductor ASA must be referred the document is given priority over this document. Please note that KAGA FEI shall not be liable for any problem and related issue for developed or manufactured application software or product without reference or consideration of the information released by Nordic Semiconductor ASA.
2) In case of applying the radio certification to countries or regions other than the countries (Japan, USA (FCC), Canada (ISED)) certified as module, this module may fail to meet the test limit of regulations in some countries or regions. In such cases, please take measures to meet the limit externally of this module, or apply to the certification with lower setting of maximum output power.
3) This module is the embedded software module including Softdevice. This module is qualified as PHY only with Component category by Bluetooth SIG. The QDID of this module is 128525. Softdevce has the QDID 138767 certified by Nordic. The final product needs to get qualification as End product before selling the product. Please refer to following combination and consult with your qualification body and BQC.

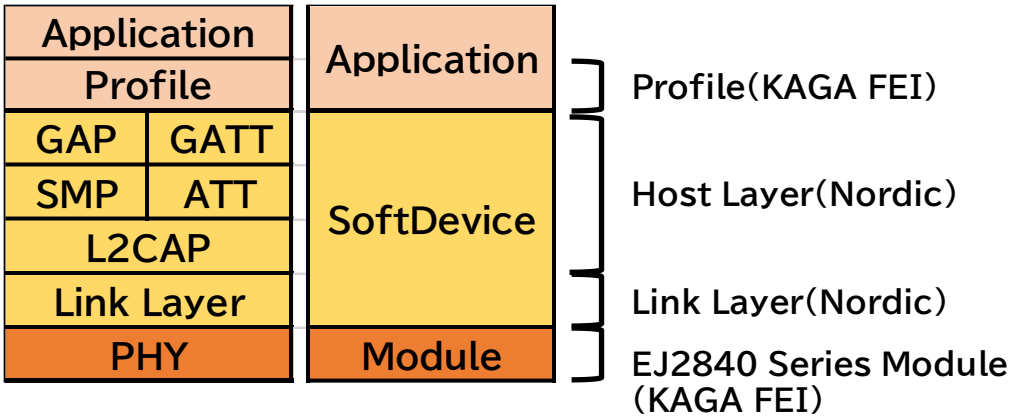

The use of Embedded Software

Before using this product.
Please kindly read carefully and understand the following before using the Products.

1. KAGA FEI Co., Ltd. (hereinafter “KFEI”), lawfully has copyrights and other rights to the software embedded to the memory of the Products (the “Embedded Software”). Except as otherwise expressly provided herein, your company is not permitted to disclose or offer the Embedded Software, either wholly or partly, to any third party (including uploading to your company or third party (ies)’s web sites and downloading by third parties from such sites), nor to copy, revise, reverse engineer, upgrade, make specification change, or alienate the Embedded Software.

2. Before using the Products, you need to check and confirm sufficient safety and operation of yourproducts which incorporate the Products and interoperability and compatibility with other Bluetooth® enabled products.

3. KGEI have not evaluated and confirmed the interoperability, compatibility, etc. of the Products (including Embedded Software) with every kind of Bluetooth® enabled product. In addition, KFEI does not guarantee interoperability and compatibility of the Product with certain devices. In order to minimize the damage or harm arising out of the Potential Failure or out of combination with other devices, KFEI recommend your company set up interface or external pin (for detail, please refer to Specification “ Pin Layout ” of this document) for rewriting the Embedded Software.

Copyright 2024 KAGA FEI Co., Ltd.

Downloaded from Arrow.com.

3.Absolute maximum ratings

Symbol	Parameter	Min.	Max.	Units
VDD		-0.3	+3.9	V
GND			0	V
VIO, VDD≤3.6V		-0.3	VDD+ 0.3	V
VIO, VDD>3.6V		-0.3	+3.9	V
Storage temperature		-40	+85	Deg-C
MSL	Moisture Sensitivity Level	3		
ESD HBM	Human Body Model		1	kV
ESD MM	Machine Model		100	V
Endurance	Flash Memory Endurance	10000		write/erase cycles
Retention	Flash Memory Retention	10 years		At 85 deg-C

Copyright 2024 KAGA FEI Co., Ltd.

Downloaded from Arrow.com.

4.Electrical characteristics

4.1.Recommendation operating range

Symbol	Parameter	Min.	Typ.	Max.	Units
VDD	VDD supply voltage, independent of DCDC enable	1.7	3.0	3.6	V
VDD,POR	VDD supply voltage needed during power-on reset.	1.75			V
tR_VDD	Supply rise time (0V to 1.7V)*1			60	ms
TA	Operation temperature	-40	25	85	Deg-C

*1 The on-chip power-on reset circuitry may not function properly for rise times outside the specified interval. Also after power off, it must start up from below 0.3V. The on-chip power-on reset circuitry may not function properly.

4.2.DC Specifications

The Specification applies for Topr.= 25 degrees C, VDD = 3.0V

Symbol	Parameter (condition)	Min.	Typ.	Max.	Units
VIH	Input high voltage	0.7 x VDD		VDD	V
VIL	Input low voltage	GND		0.3 x VDD	V
VOH	Output high voltage (high drive 5 mA)	VDD-0.4		VDD	V
VOL	Output low voltage (high drive 5 mA)	GND		GND+0.4	V
RPU	Pull-up resistance	11	13	16	Kohm
RPD	Pull-down resistance	11	13	16	Kohm
ITX,+8dBm,DCDC	TX only run current (DCDC, 3V) PRF=+8 dBm		14.8		mA
ITX,+8dBm	TX only run current PRF=+8 dBm		32.7		mA
IRX,1M, DCDC	RX only run current (DCDC, 3V) 1Mbps Bluetooth low energy		4.6		mA
IRX,1M	RX only run current 1Mbps Bluetooth low energy		9.9		mA
IRX,2M, DCDC	RX only run current (DCDC, 3V) 2Mbps Bluetooth low energy		5.2		mA
IRX,2M	RX only run current 2Mbps Bluetooth low energy		11.1		mA
RSTR	RESET High to Module Ready		1.5	3.0	sec

Copyright 2024 KAGA FEI Co., Ltd.

Downloaded from Arrow.com.

4.3.RF Specifications

Symbol	Description	Min.	Typ.	Max.	Units
Fop	Operating frequencies	2402		2480	MHz
PLLchsp	PLL channel spacing		1		MHz
DfBLE1M	Frequency deviation @ Bluetooth low energy 1Mbps		+/-250		kHz
DfBLE2M	Frequency deviation @ Bluetooth low energy 2Mbps		+/-500		kHz
PRF	Maximum output power		8.0		dBm
PRFC	RF power control range		28		dB
PRFCR	RF power accuracy			+/-4	dB
PRF1	1st Adjacent Channel Transmit Power 1 MHz (1 Mbps)		-24.8		dBc
PRF2	2nd Adjacent Channel Transmit Power 2 MHz (1 Mbps)		-54.0		dBc
PRXMAX	Maximum received signal strength at < 0.1% PER		0		dBm
PSENS,IT,1M,BLE	Receiver sensitivity 1Mbps Bluetooth low energy Ideal transmitter <=37bytes (0.1% BER)		-95		dBm
PSENS,IT,2M,BLE	Receiver sensitivity 2Mbps Bluetooth low energy Ideal transmitter Packet length<=37bytes		-92		dBm
PSENS,IT,BLE LE125k	Sensitivity, 125 kbps Bluetooth low energy mode		-103.0		dBm

Many documents of nRF52840, such as product specification and the errata, can be found at the link below (There is a possibility that it will change in the future). Please be sure to check these latest documents when using our module.

nRF52840_Product Specification
https://infocenter.nordicsemi.com/topic/ps_nrf52840/keyfeatures_html5.html?cp=3_0_0

nRF52840 Errata
https://infocenter.nordicsemi.com/topic/struct_nrf52/struct/nrf52840_errata.html?cp=3_0_1

For more information
https://infocenter.nordicsemi.com/topic/struct_welcome/struct/welcome.html

Copyright 2024 KAGA FEI Co., Ltd.

Downloaded from Arrow.com.

5.Circuit Schematic

5.1.Block Diagram

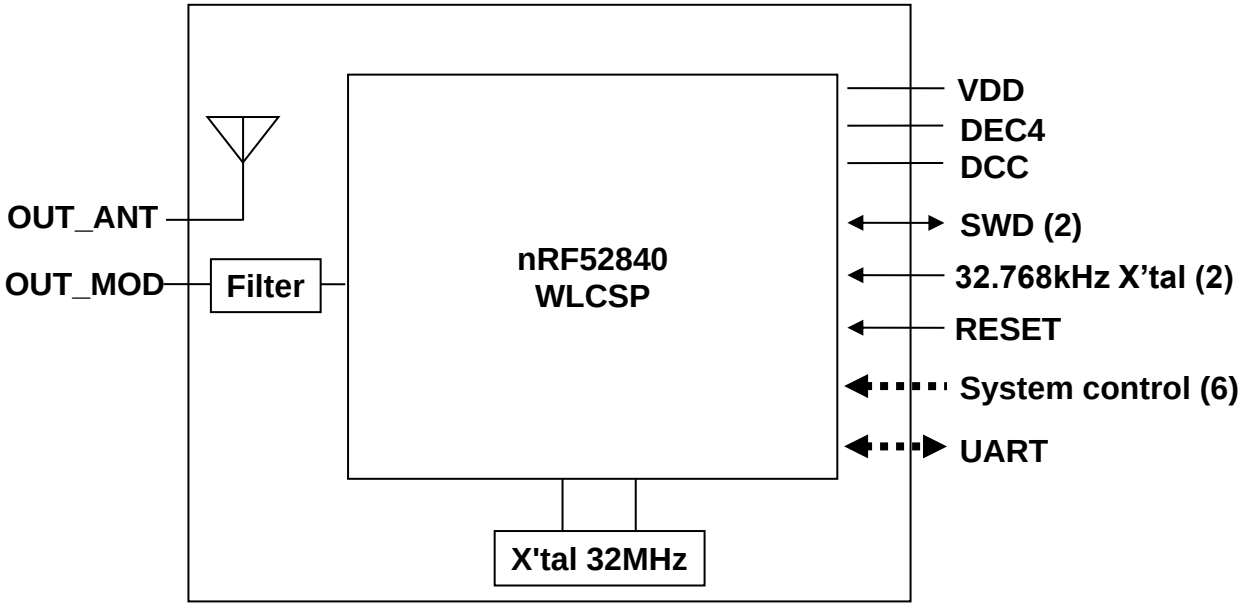

Copyright 2024 KAGA FEI Co., Ltd.

Downloaded from Arrow.com.

5.2.Sample circuits

Internal LDO setup

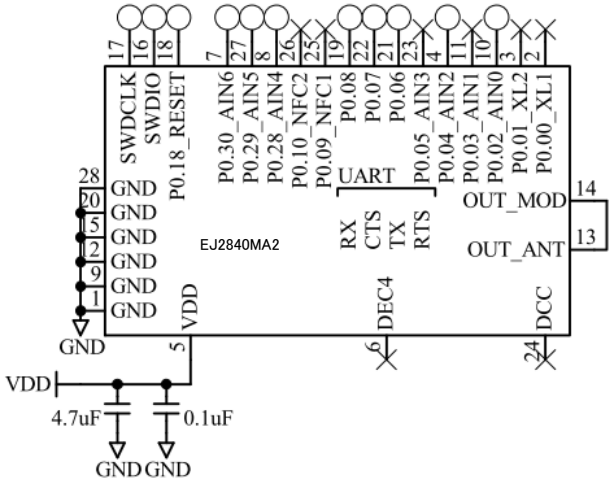

Internal LDO setup with external 32.768kHz X'tal

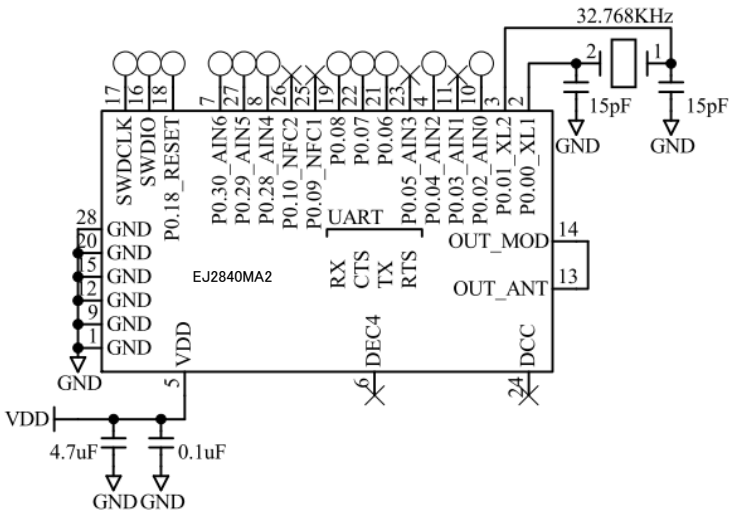

DC/DC converter setup

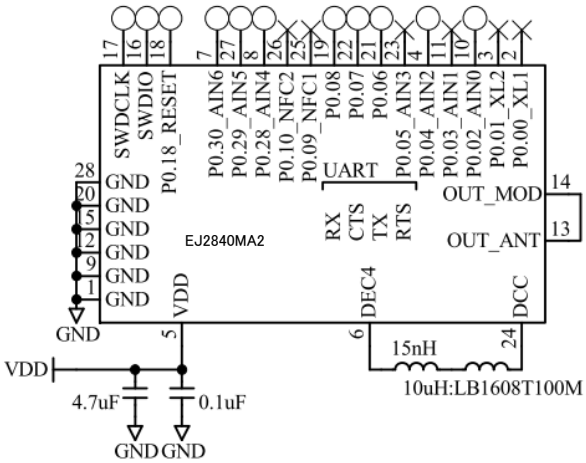

Value	Description	Footprint [mm]
0.1uF	Capacitor, X5R, ±10 %	1005
4.7uF	Capacitor, X5R, ±10 %	1608
15pF	Capacitor, C0H, ±5 %	1005
32.768 kHz	FC-12M (EPSON), SC-20S (SII), etc., Cl = 9 pF	2012
15nH	High frequency chip inductor ±5 %	1005
10uH	LB1608T100M	1608

Copyright 2024 KAGA FEI Co., Ltd.

Downloaded from Arrow.com.

5.3.Reference Circuits

Reference Circuits (Normal voltage mode*1)

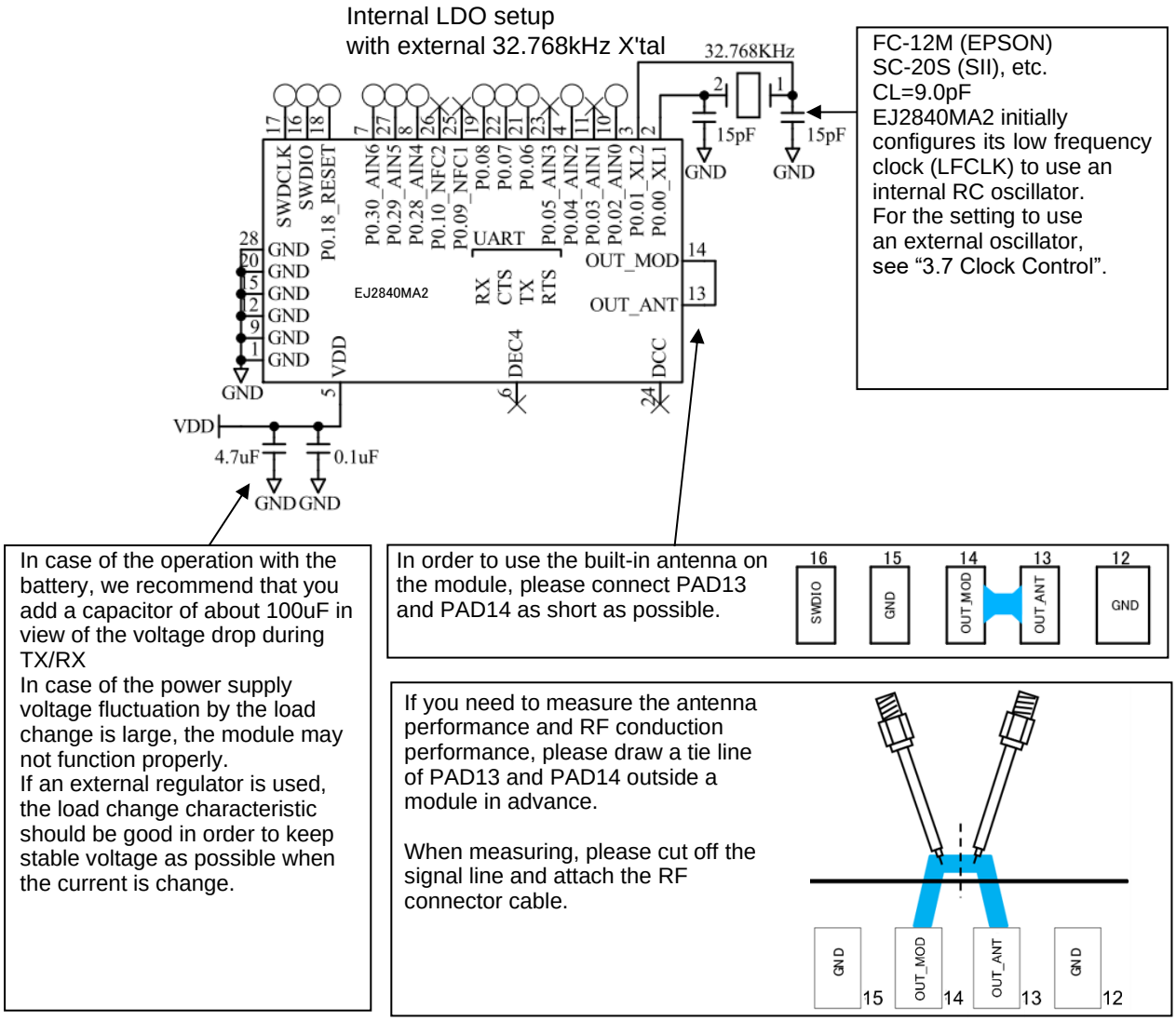

*1 Normal voltage mode
Normal voltage mode is entered when the supply voltage is connected to both the VDD and VDDH pins.
In EJ2840MA2, VDD and VDDH are connected inside the module.

Copyright 2024 KAGA FEI Co., Ltd.

Downloaded from Arrow.com.

6.Outline/Appearance

Outline / Land pattern example

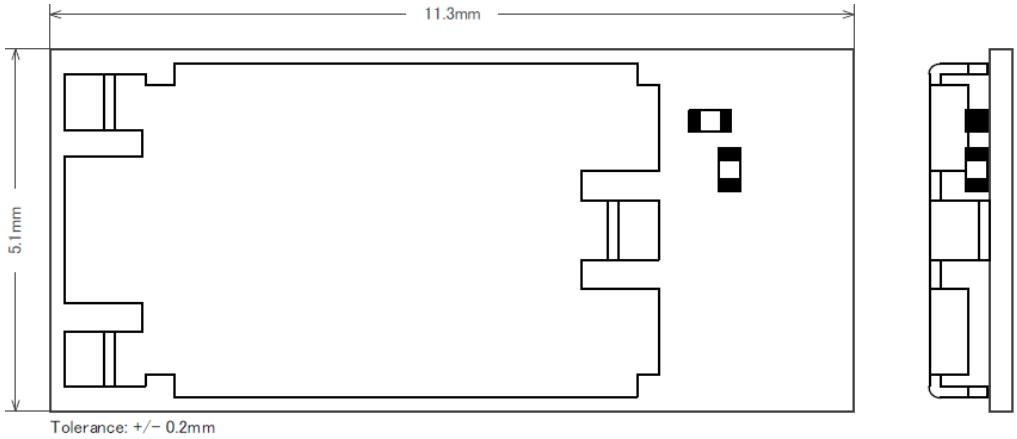

Tolerance: +/- 0.2mm
Unit : (mm)

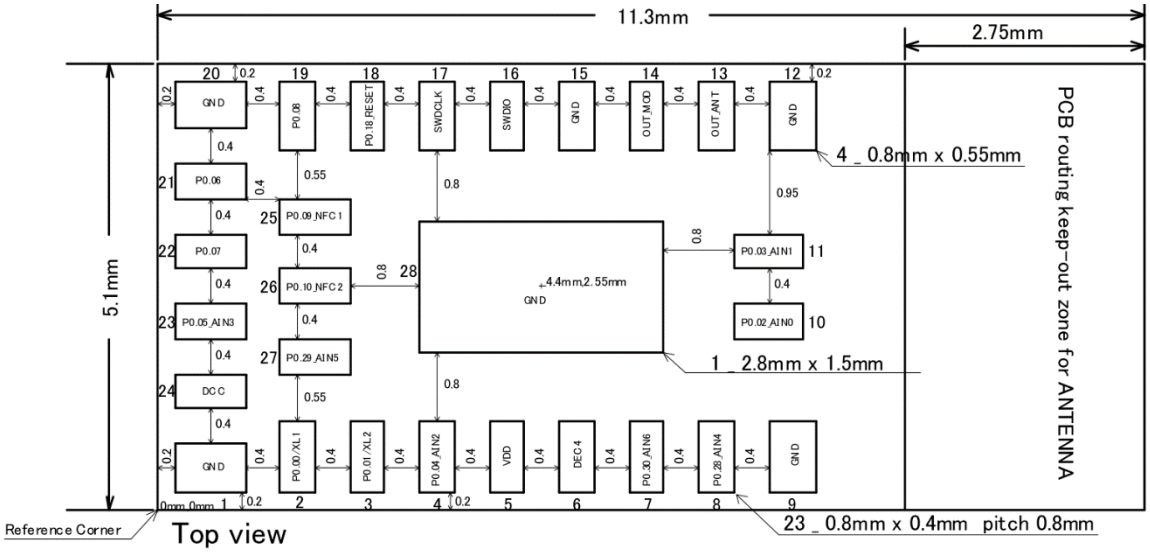

The dimension of the land pattern is the same as a foot pattern.Recommended metal mask for solder printing

Pad size	Metal mask opening
Signal pad 23 – 0.4 x 0.8 mm	0.35 x 0.7 mm
Corner pad 4 – 0.55 x 0.8 mm	0.45 x 0.75 mm
Center pad 1 – 2.8 x 1.5 mm	1.1 x 1.2 mm x 2

The metal mask thickness: t=0.1mm

Center pad

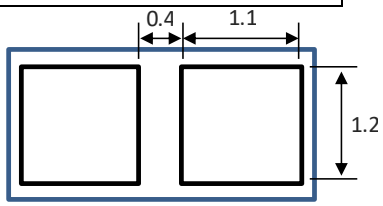

Copyright 2024 KAGA FEI Co., Ltd.

Downloaded from Arrow.com.

7.Pin Layout

Pin Descriptions

Pin	Pin name	Pin function	Description
1	GND	Ground	Ground pin. (0 V)
2	P0.00/XL1	Analog input	Connection for 32.768 kHz crystal (LFXO). (Factory default: Using an internal RC oscillator)
3	P0.01/XL2	Analog input	Connection for 32.768 kHz crystal (LFXO). (Factory default: Using an internal RC oscillator)
4	P0.04_AIN2	DTM mode	Enter DTM Mode
5	VDD	Power	Power supply pin.
6	DEC4	Power	1V3 regulator supply decoupling.
7	P0.30_AIN6	Mode Select	Data transfer method setting
8	P0.28_AIN4	Power Save	Enter Power Save Mode
9	GND	Ground	Ground pin. (0 V)
10	P0.02_AIN0	Factory reset	Application will revert to default settings.
11	P0.03_AIN1	Deep sleep	Enter deep sleep mode
12	GND	Ground	Ground pin. (0 V)
13	OUT_ANT	Antenna In/Out	Internal antenna. It should be connected to **Pin 14** OUT_MOD for normal operation.
14	OUT_MOD	RF In/Out	RF I/O pin. It should be connected to **Pin 13** OUT_ANT for normal operation.
15	GND	Ground	Ground pin. (0 V)
16	SWDIO	Digital I/O	Serial Wire Debug I/O for debug and programming
17	SWDCLK	Digital input	Serial Wire Debug clock input for debug and programming
18	P0.18_RESET	Reset	The device will be held in RESET while this pin is held low.
19	P0.08	UART RX	Data input
20	GND	Ground	Ground pin. (0 V)
21	P0.06	UART TX	Data output
22	P0.07	UART CTS	Clear to send input signal
23	P0.05_AIN3	UART RTS	Ready to send output signal
24	DCC	Power	DC/DC converter output pin.
25	P0.09_NFC1	Not Connected	Reserved for future use
26	P0.10_NFC2	Not Connected	Reserved for future use
27	P0.29_AIN5	DFU mode	Enter DFU Mode
28	GND	Ground	Ground pin. (0 V)

Copyright 2024 KAGA FEI Co., Ltd.

Downloaded from Arrow.com.

8.Handling Precaution

This specification describes desire and conditions especially for mounting.

Desire/Conditions

8.1.Environment conditions for use and storage

1. Store the components in an environment of < **40deg-C/90%RH** if they are in a moisture barrier bag packed by KAGA FEI.
2. Keep the factory ambient conditions at < **30deg-C/60%RH** .
3. Store the components in an environment of < **25±5deg-C/10%RH** after the bag is opened. (The condition is also applied to a stay in the manufacture process).

8.2.Conditions for handling of products

Make sure all of the moisture barrier bags have no holes, cracks or damages at receiving. If an abnormality is found on the bag, its moisture level must be checked in accordance with 2 in 8.2.

Refer to the label on the bag.

1. All of the surface mounting process (reflow process) must be completed **in 12 months** from the bag seal date.
2. Make sure humidity in the bag is less than **10%RH** immediately after open, using a humidity indicator card sealed with the components.
3. **All** of the surface mounting process (reflow process including rework process) must be completed in **168 hours** after the bag is opened (inclusive of any other processes).
4. If any conditions in 8.1 or condition 2 and 3 in 8.2 are not met, bake the components in accordance with the conditions at **125deg-C 24hours**.
5. As a rule, baking the components in accordance with conditions 4 in 8.2 shall be once.
6. Since semi-conductors are inside of the components, they must be free from static electricity while handled.(<100V) Use ESD protective floor mats, wrist straps, ESD protective footwear, air ionizers etc. , if necessary.
7. Please make sure that there are lessen mechanical vibration and shock for this module, and do not drop it.
8. Please recognize pads of back side at surface mount.
9. Washing the module is not recommended. If washing cannot be avoided, please test module functionality and performance after thoroughly drying the module. We cannot be held responsible for any failure due washing the module.

Copyright 2024 KAGA FEI Co., Ltd.

Downloaded from Arrow.com.

10. Please perform temperature conditions of module at reflow within the limits of the following. Please give the number of times of reflow as a maximum of 2 times.

Recommented Reflow Profile

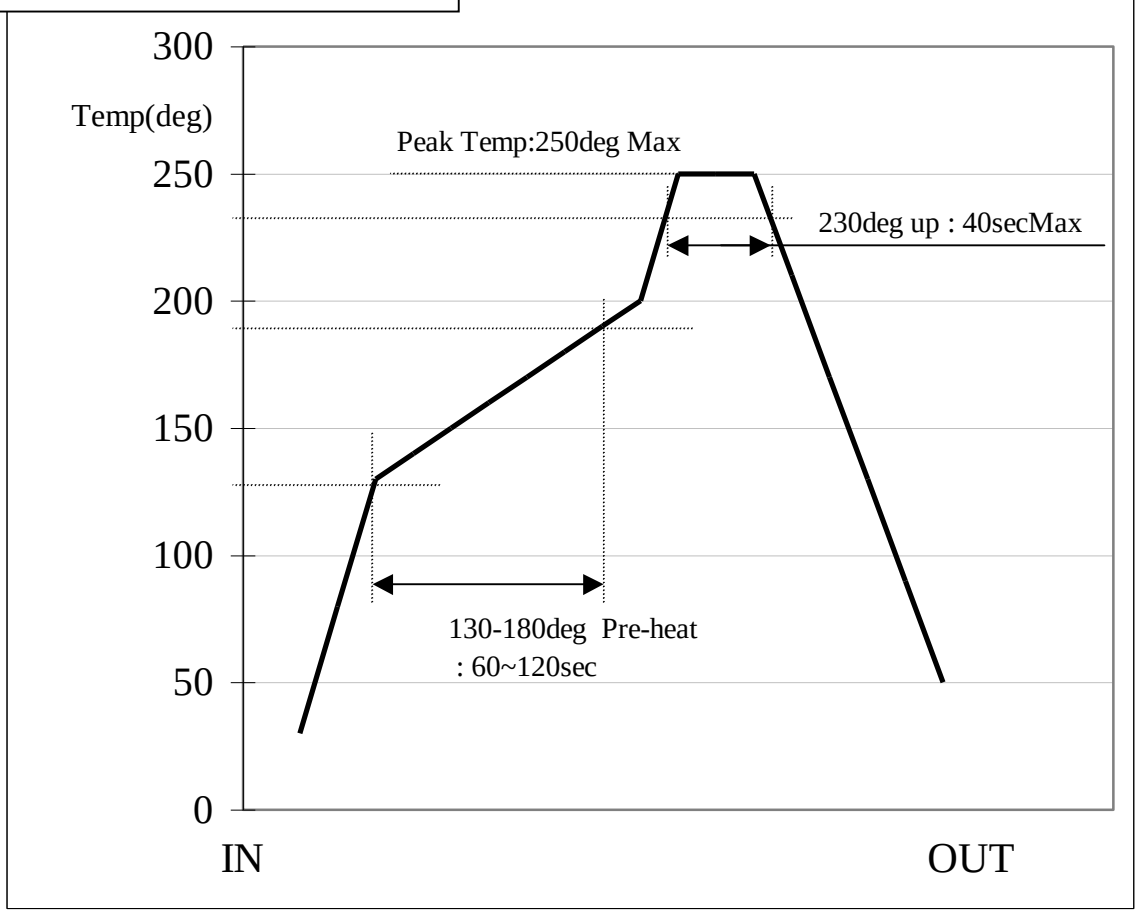

Copyright 2024 KAGA FEI Co., Ltd.

Downloaded from Arrow.com.

9.Packaging Specification

9.1.Packaging Specification

(1) Packaging Material

Name	Outline	Materials
Emboss	24 ㎜ wide - 12 ㎜ Pitch	Couductive PS
Cover Tape	-	-
Reel	φ330 ㎜	Couductive PS
Desiccant	30g×1	-
Humidity indicator card	-	-
Aluminum moisture barrier bag	420×460（㎜）	(AS)PET/AL/NY/PE(AS)
Label	-	-
Corrugated cardboard box(Inner)	339×351×74（㎜）	-
Corrugated cardboard box(Outer)	369×369×277(㎜）	-

(2)Packaging Unit

Max 2,000 pieces/Reel Max 6,000 pieces/Box(Outer)

(3)Packing Figure

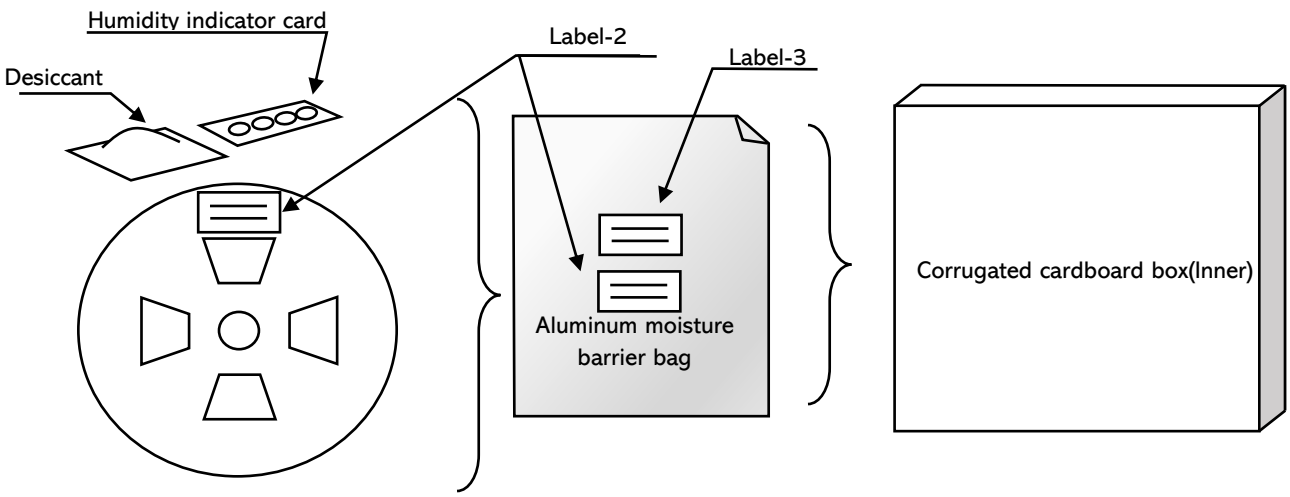

Copyright 2024 KAGA FEI Co., Ltd.

Downloaded from Arrow.com.

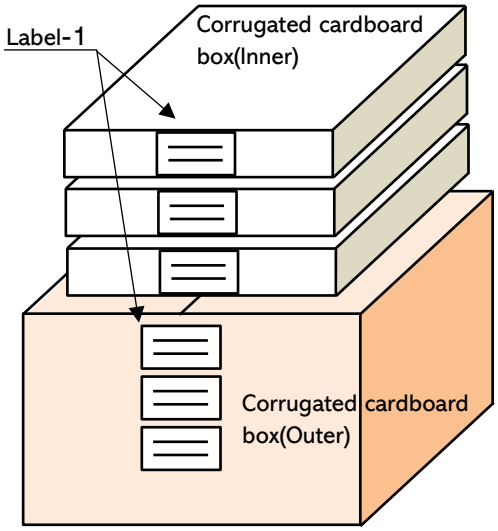

（4）Label

Label-1
- Purchase order
- Part No.
- Quantity
- Lot No.
- Technical conformity mark
- Certification No.
- FCC/ISED certification No.
- Country of origin

Label-2
- Serial No.
- Part No.
- Quantity
- Technical conformity mark
- Certification No.
- FCC/ISED certification No.
- Country of origin

Label-3
- Caution label
- MSL Level3

9.2.Tape specification

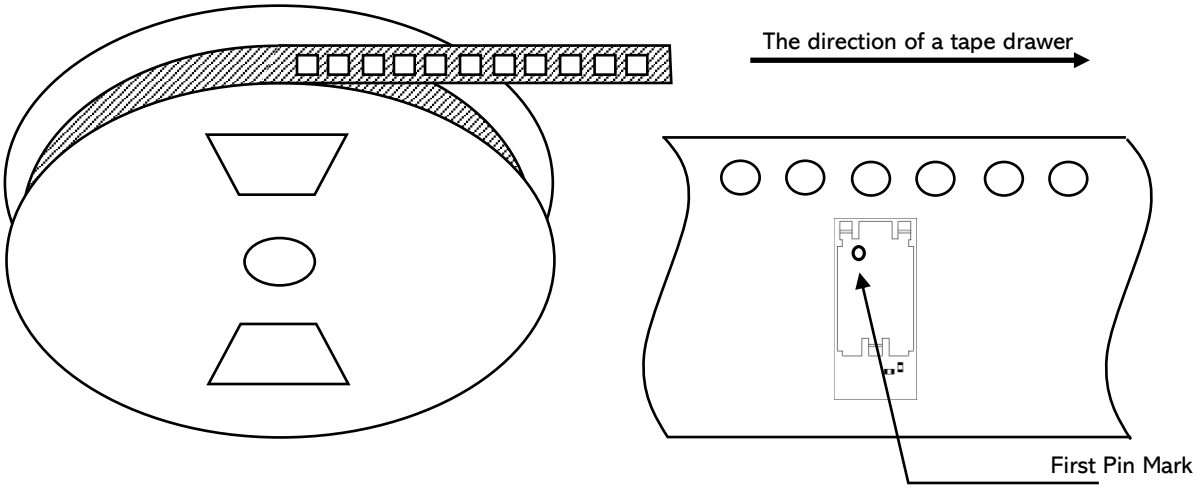

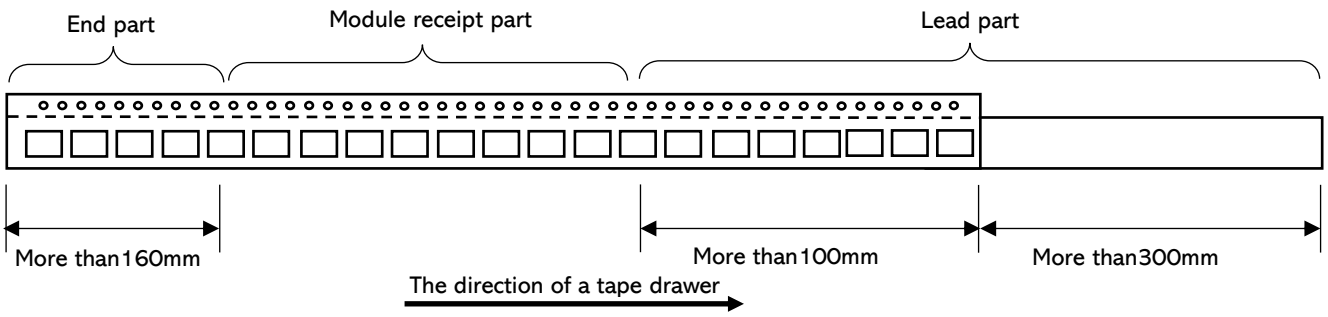

Copyright 2024 KAGA FEI Co., Ltd.

Downloaded from Arrow.com.

Emboss carrier tape drawing

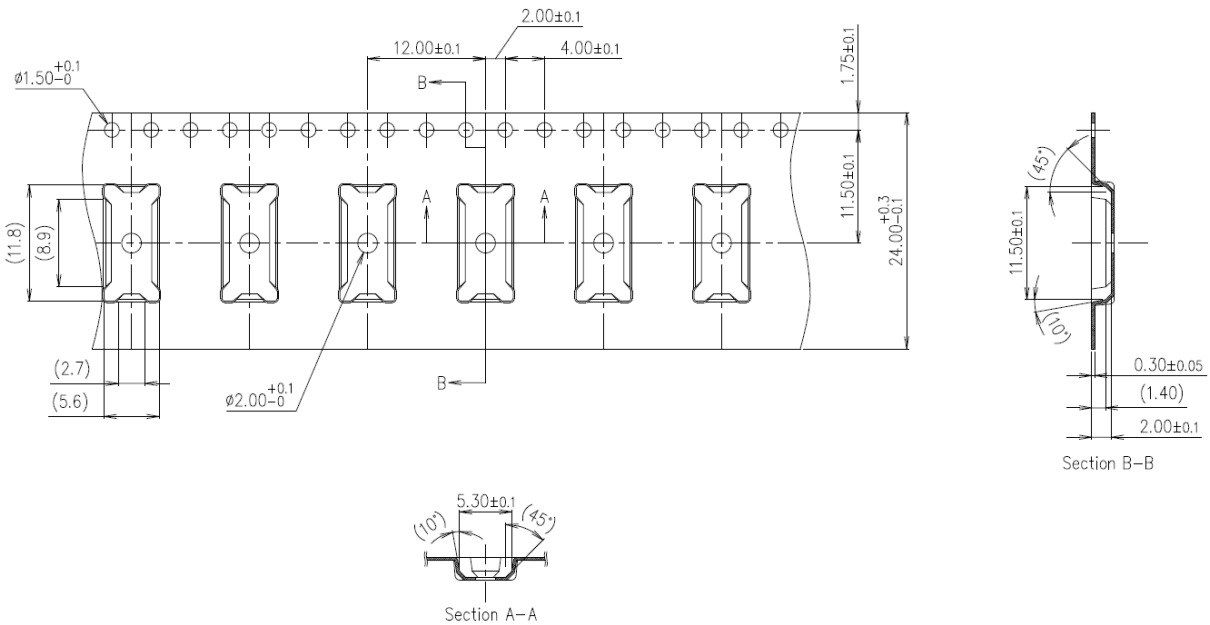

9.3.Reel specification

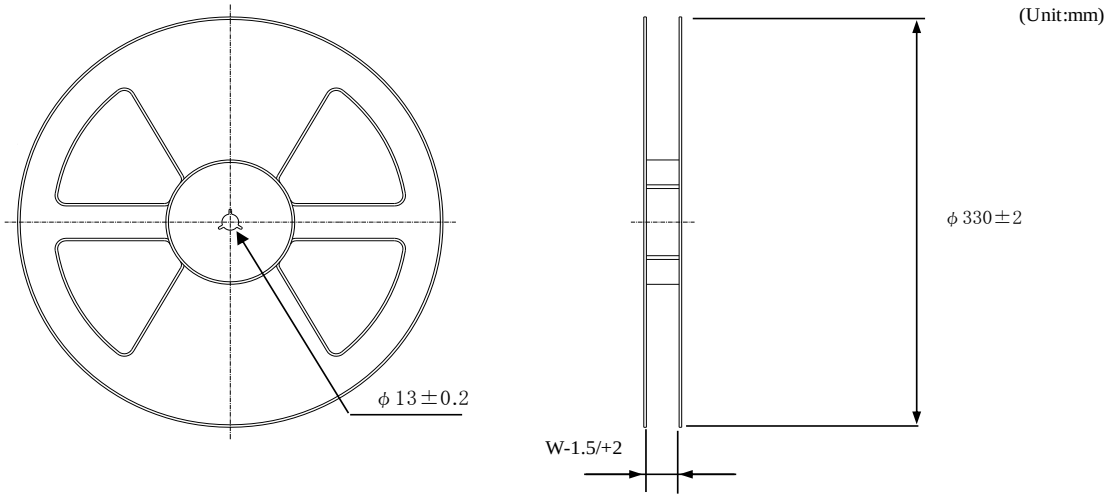

Tape wide	8mm	12mm	16mm	24mm	32mm	44mm
W	9.4mm	13.4mm	17.4mm	25.4mm	33.4mm	45.4mm

Copyright 2024 KAGA FEI Co., Ltd.

Downloaded from Arrow.com.

9.4.Taping performance

Both of an embossing tape top cover tape bear this,when the power of 10N is applied in the direction of a drawer.

The exfoliation adhesion of a top cover tape is the intensity of 0.1~1.3N.
(The angle to pull is 165~180 degrees. The speed to pull is 300 mm/min)

Note

Lack of the parts in 1 reel is with two or less pieces.

MSL Level 3 Under control

Copyright 2024 KAGA FEI Co., Ltd.

Downloaded from Arrow.com.

10.Antenna application note

10.1.Recommended module mounting example

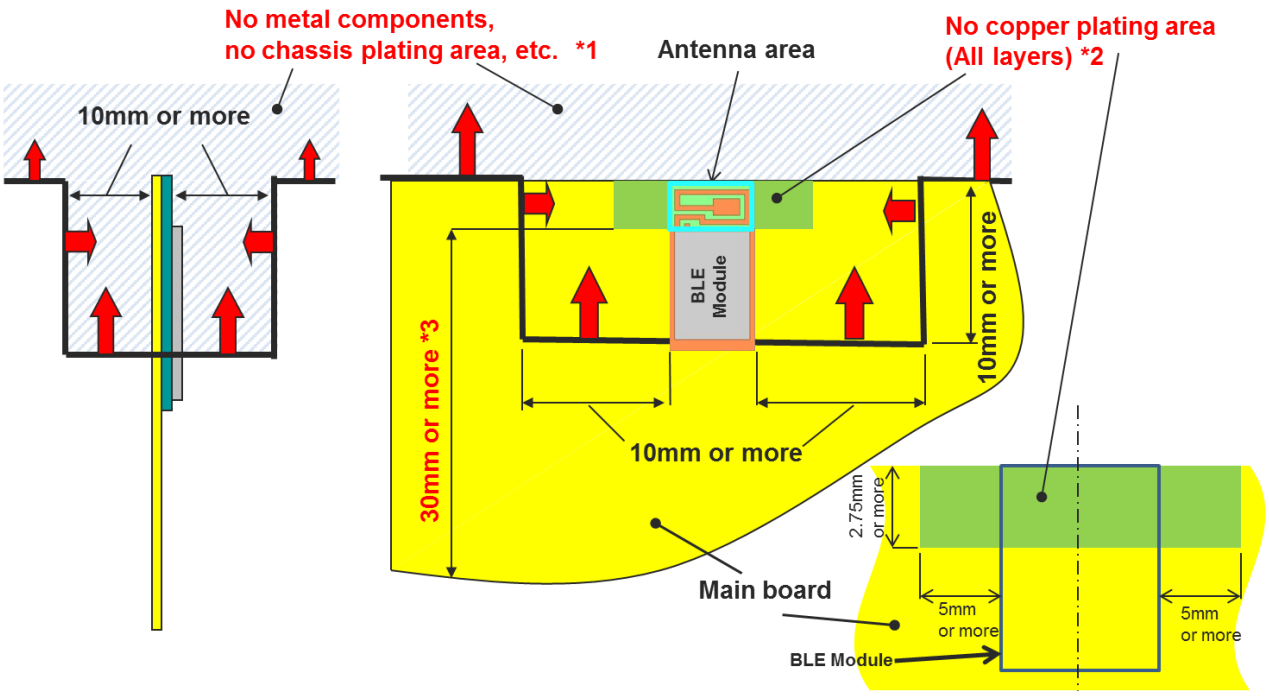

*1 Please do not place any metal components in blue shaded space.*1) We do not recommend placing any metal objects upper space of the module in the above figure. If it needs to place metal objects, please consider keeping the metal off from the antenna as far as you can. Such as signal line and metal chassis as possible except for main board while mounting the components in *1 space on the main board is allowed except for no copper plating area. (*2).

*2 This area is routing prohibited area on the main board. Please do not place copper on any layer. Please remain use of FR-4 dielectric material. The antenna is tuned with the FR-4.

*3 Characteristics may deteriorate when GND pattern length is less than 30mm. It should be 30 mm or more as possible.

Even when above mentioned condition is satisfied, communication performance may be significantly deteriorated depending on the structure of the product.

Copyright 2024 KAGA FEI Co., Ltd.

Downloaded from Arrow.com.

10.2.Other module mounting examples

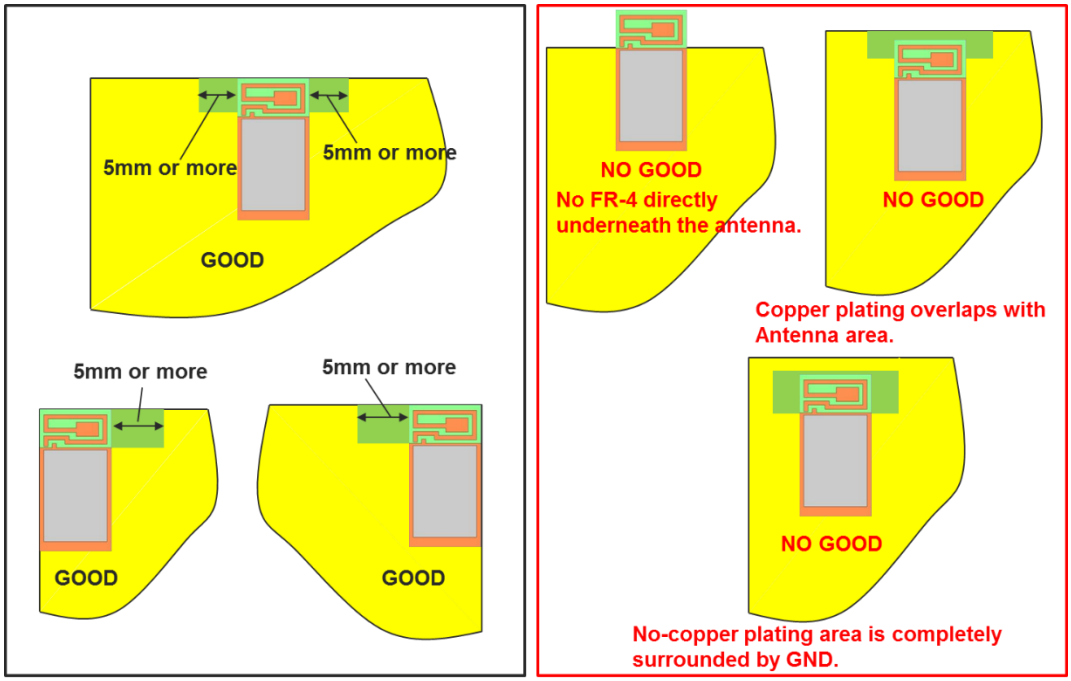

Placement of resin or plastic parts

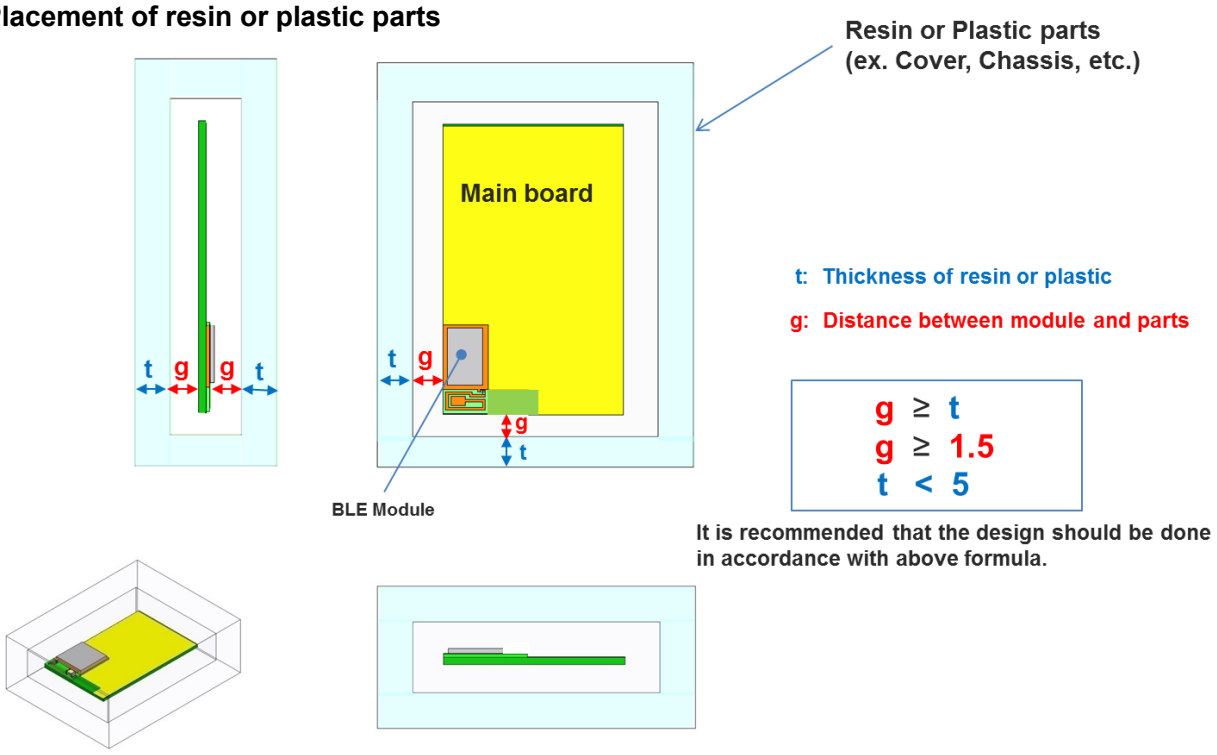

Please do not apply molding over the antenna area of BLE module.

Copyright 2024 KAGA FEI Co., Ltd.

Downloaded from Arrow.com.

10.3.Directional characteristics example (when mounted on evaluation board)

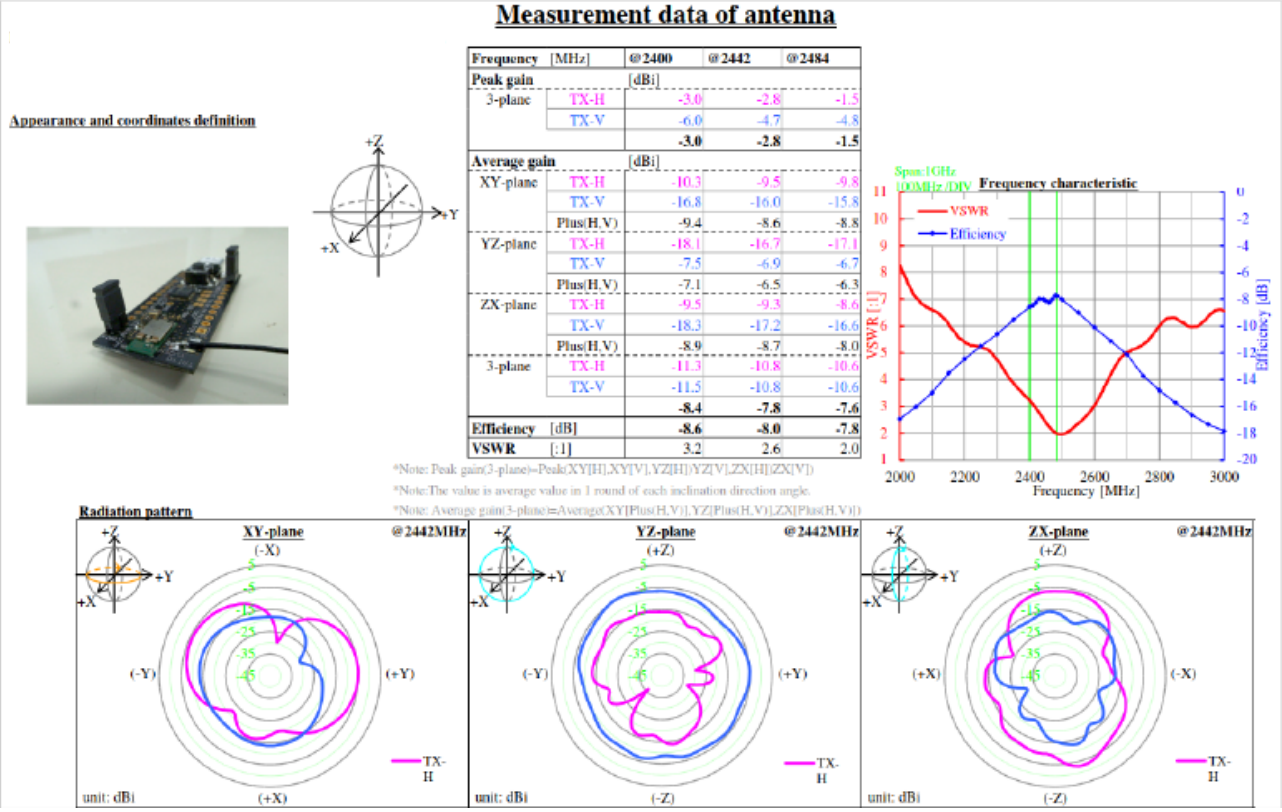

About this Application Note

・This Application Note has been prepared as a reference material to help obtaining the antenna performance mounted on Bluetooth low energy module better while it is not guaranteed or assured to obtain better communication performance and distance.
・This product “Bluetooth low energy module” has been certified and matching circuit constant for antenna within module cannot be changed when ambient environment condition changes. The product must be re-certified when matching circuit constant is changed.

Copyright 2024 KAGA FEI Co., Ltd.

Downloaded from Arrow.com.

11.Design guide

11.1.Battery operation

When using a small battery (e.g. CR2032), a large capacitor (e.g.100uF low leakage capacitor) should be placed near the battery. This will reduce the voltage drop especially when the module is operated at low temperatures

11.2.Pattern Design Guide

11.2.1.Power Supply System

Power supply bypass capacitors should be placed close to the VDD pin of the module. The VDD trace should be greater than 0.5mm and a bigger a via diameter is recommended.

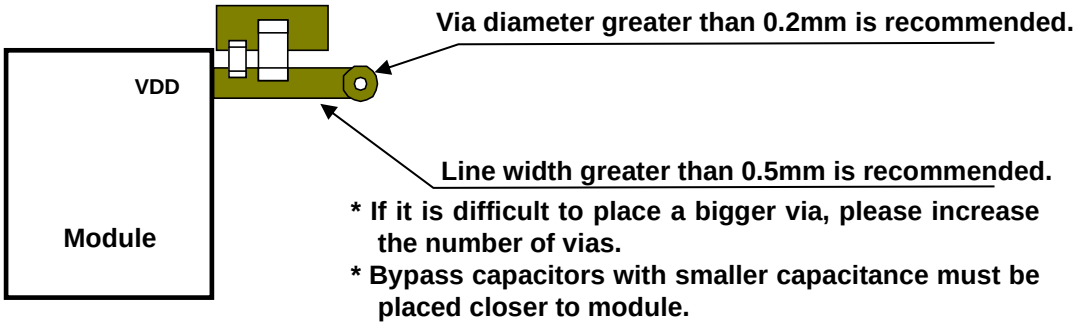

11.2.2.Bypass Capacitor Layout

A parallel combination of a small capacitance (about 10pF) and a large capacitance (1uF to 10uF) is recommended for bypass capacitors. The GND of the bypass capacitor should be placed close to an adjacent module GND to ensure the shortest closed loop.

11.2.3.GND Pattern

Power supply bypass capacitor GND should be placed in proximity of module GND. Wide GND area must be provided to ensure isolation for each layer. Also, please surround the signal lines of GPIO, DCC etc. with GND layer as much as possible.

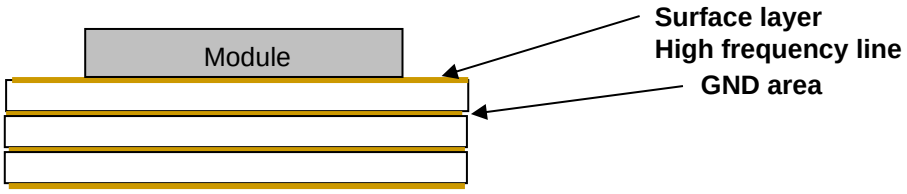

GND pattern of each layer should be connected to GND area with large number of via.

Copyright 2024 KAGA FEI Co., Ltd.

Downloaded from Arrow.com.

Copyright Information:

Copyright Year 2023

- Bluetooth® low energy module Software

This software is owned by KAGA FEI CO., LTD.

You and your company shall conform following:

(1) The software image may not be made a copy from KAGA FEI CO., LTD.'s module.
(2) The software image provided by KAGA FEI CO., LTD. must not be loaded to another vendor's module or chipset, and can be copied only for backup.
(3) The software image may not be provided to anyone.
(4) The software image may not be analyzed by reverse engineering, decompile, and disassemble.

KAGA FEI CO., LTD. is not responsible for any damage caused by this software.

Firmware Version is Ver. 1.0.1

There is a possibility of changing a software specification.

Trademark:

- iBeacon is a trademark of Apple Inc.

Copyright 2024 KAGA FEI Co., Ltd.

Downloaded from Arrow.com.

Table of Contents

1. Introduction ····· **32**
2. Hardware ····· **32**
2.1 IO Assignments ····· 32
2.1.1 Module ····· 32
2.1.2 Interface ····· 32
3. General Information ····· **33**
3.1 Command and Event Formats ····· 33
3.2 Application Boot ····· 33
3.3 Application Settings and Defaults ····· 34
3.4 Saving Configuration Data ····· 34
3.5 Factory Reset ····· 36
3.6 Power Control ····· 36
3.6.1 Regulator Selection ····· 36
3.6.2 Power Save Mode ····· 36
3.6.3 Deep Sleep Mode ····· 36
3.7 Clock Control ····· 37
3.7.1 HFCLK Clock ····· 37
3.7.2 LFCLK Clock ····· 37
3.8 Direct Test Mode (DTM) ····· 37
3.9 Device Firmware Update (DFU) ····· 37
4. Interfaces ····· **38**
4.1 Types ····· 38
4.1.1 UART ····· 38
4.2 Modes ····· 38
4.2.1 Command Mode ····· 38
4.2.2 Through Mode ····· 38
5. Bluetooth Low Energy ····· **40**
5.1 Common Settings ····· 40
5.1.1 Device Address ····· 40
5.1.2 Transmission Power ····· 40
5.1.3 Automatic Start ····· 40
5.2 Roles ····· 41
5.3 Advertising ····· 41
5.3.1 Advertising Parameters ····· 41
5.3.2 Advertising Data ····· 41
5.3.3 Beacon Data ····· 42
5.3.4 Advertising Modes ····· 42
5.3.5 PHY Selection ····· 43
5.3.6 Starting and Stopping Advertising ····· 43
5.4 Scanning ····· 44
5.4.1 Scan Parameters ····· 44
5.4.2 Scanning ····· 44
5.4.3 Filtering ····· 45
5.4.4 Beacon data ····· 47
5.4.5 Connecting ····· 47
5.5 Connections ····· 48
5.5.1 Peripheral ····· 48
5.5.2 Central ····· 50
5.5.3 Commands and Events ····· 50
5.5.4 Service ····· 51
5.5.4.1 Default Service ····· 51
5.5.4.2 Custom service ····· 51
5.6 Security ····· 52
5.6.1 Security Levels ····· 52

Copyright 2024 KAGA FEI Co., Ltd.

Downloaded from Arrow.com.

5.6.2 Setting IO Capabilities and Out-of-Band Pairing 53
5.6.3 Pairing 54
5.6.4 Bonding 56
5.7 Privacy 57
5.7.1 Address Privacy 57
5.7.2 Accept listing 57

Figure 1: Data flow for command and through modes 39
Figure 2: Receiving advertising PDUs during scanning 44
Figure 3: User-configurable scan filters 46
Figure 4: Configuring the security level 52
Figure 5 (Top) Passkey display, Passkey Input (Bottom) Numeric comparison, Out-of-band data 55
Figure 6: Bonding after successful pairing 56

Table 1: System control pins 32
Table 2: Interface pins 32
Table 3: Boot status messages 33
Table 4: Application defaults 34
Table 5: Advertising modes 42
Table 6: Supported PHY types 43
Table 7: Security levels 52
Table 8: IO Capabilities 53
Table 9: Pairing methods 54
Table 10: Pairing events 54
Table 11: Bonding commands 56

Copyright 2024 KAGA FEI Co., Ltd.

Downloaded from Arrow.com.

1. Introduction

This document outlines the components of the EJ2840MA2 device and the configuration options available to the user. The command and event formats required for communicating with the EJ2840MA2 device are explained. Detailed descriptions and use of the commands and events are available in the "**Command API**".**Hardware**

2. Hardware

2.1 IO Assignments

2.1.1 Module

A number of IO pins are configured for specific functionality. Refer to the table for your specific board model for pin assignments. All pins listed below are configured as input only unless specified. Note that not all pin functions are available for each board.

Table 1: System control pins

Pin	Function	Configuration	Description
P0.02	Factory reset	Active low pullup	If held low on reset, application settings stored in non-volatile memory are erased. Application will revert to default settings.
P0.18	Reset	Active low pullup	The device will be held in RESET while this pin is held low.
P0.29	DFU mode	Active low pullup	When held low on reset, device will enter DFU mode until reset.
P0.04	DTM mode	Active low pullup	When held low on reset, the bootloader will enter DTM mode instead of standard application.
P0.30	BLE Mode Select	Varies	Enabled when **notify** characteristic notifications are enabled. Low (default) – through mode, pulldown High – command mode, pullup
P0.28	Power Save	Pullup	Set the Pin to the Low state (at least 0.5 seconds or longer) to enter Power Save Mode.
P0.03	Deep Sleep	Pullup	If a startup / communication disconnection occurs while the Pin is in the Low state, it enters Deep Sleep Mode.

2.1.2 Interface

The pins listed in the table below are configured for use by the respective interfaces.

Table 2: Interface pins

Pin	Function	Description
	UART	
0.05	UART RTS	Ready to send output signal
0.06	UART TX	Data output
0.07	UART CTS	Clear to send input signal
0.08	UART RX	Data input

Copyright 2024 KAGA FEI Co., Ltd.

Downloaded from Arrow.com.

3. General Information

3.1 Command and Event Formats

Commands follow a standard format.

- Each command begins with a command start character '$'
- The 4 character command code
- Input parameters for the command begin with a parameter token ':'
- The command frame ends with CRLF "¥r¥n"

Example
"$CODE¥r¥n"
"$CODE:param1:param2¥r¥n"

A response will be returned for all commands. The response follows the same format described above. For commands that set configuration options, the response will provide a single parameter: "OK" if the command was successful or "ERRxxx" if the command could not be executed. The error number shows the reason that the command failed. Refer to Error Codes in the "**Command API**".
For commands that fetch configuration options, the parameters returned are described in the "**Command API**".
Exceptions are for HRST (immediate reset) and FRST (factory reset) as the device will immediately reset. In these cases.

Events may be generated during operation. Events follow the same format as commands, with the addition of an 'E' character following the start character. A list of events can be found in the "**Command API**".

Example
"$ECODE¥r¥n"
"$ECODE:param1:param2¥r¥n"

3.2 Application Boot

When the EJ2840MA2 is powered on or reset, a boot sequence will be performed. This boot-up includes the following operations:

- Preparing the hardware
- Loading user settings from flash memory
- Preparing the Softdevice, Services and Characteristics
- Activating the selected serial interface

Once the boot sequence is complete, a **Boot** event message will be output over the selected serial interface. The message will display a status parameter depending on the state of the device:

Table 3: Boot status messages

Status	Description
DFLT	No user configuration data available. The device default values are being used
OK	The device has successfully booted and is using the stored user configuration
ERR	The device has experienced an error during boot

Copyright 2024 KAGA FEI Co., Ltd.

Downloaded from Arrow.com.

3.3 Application Settings and Defaults

The table below lists the user-configurable settings and their default values

Table 4: Application defaults

Field	Command	Default Value
UART Baudrate	**UART**	115200 – 115200bps
Regulator	**SREG**	0 – Use LDO
LFCLK	**SXLF**	0 – Internal RC
Device name	**ADS2**	"Kfsa-B 5XXXX" XXXX: address 4Bytes
Role	**SROL**	P – Peripheral
Address type	**SPRV**	1 – Fixed address
Address	**SBAD**	The factory address is set.
Advertising interval	**ADS1**	160 – 100ms
Advertising timeout	**ADS1**	1000 – 10s
Advertising mode	**ADS6**	1 – connectable + scannable
Advertising data	**ADS3**	Only the Device name is included.
Autostart	**SASM**	1 – Enabled
Bonding	**SBND**	1 – Enabled
Connection interval min	**SCPR**	80 – 100ms
Auto Device name	**ADS9**	2 – Append 2 bytes of the address to the daybus name
Security level	**SSEC**	1 – Open
Connection interval max	**SCPR**	160 – 200ms
Connection supervision timeout	**SCPR**	400 – 4s
Connection Latency	**SCPR**	0 – 0
Extended primary PHY	**ADS8**	0 – 1Mbps
Extended second PHY	**ADS8**	2 – 2Mbps
IO capabilities	**SIOC**	0 – None
Scan duration	**SCS1**	400 – 250ms
Scan interval	**SCS1**	800 – 500ms
Scan timeout	**SCS1**	1000 – 10s
Scan type	**SCS2**	1 – active
Scan device name filter	**SFS4**	"Kfsa-B 5"
Scan Service UUID filter	**SFE5**	0 – disabled
Scan RSSI filter	**SFE1**	0 – disabled
Scan data filter	**SFE2**	0 – disabled
Scan address filter	**SFE3**	0 – disabled
Accept list	**SWHT**	0 – disabled
TX Power	**TXPW**	'X' – SoftDevice automatically selects

3.4 Saving Configuration Data

Configuration data is read from non-volatile Flash memory during boot and stored in volatile memory (RAM) during operation. Configuration changes made by the user only updates the values stored in volatile memory, therefore any reset or loss of power will cause these changes to be lost. Users can issue a **Save** command (**SAVE**) to the EJ2840MA2 to commit the current configuration data to Flash. This command can only be issued while the device is not currently advertising, scanning or connected via Bluetooth low energy. When this command is successfully executed, the previous configuration will be erased and the new configuration stored. Upon completion, a **save (**ESAVE:OK**)** event will be issued to the user interface. In the event that the data is not correctly written or the device is reset before the save completes, the EJ2840MA2 will attempt to recover the configuration data during boot. If the recovery fails, the default configuration will be loaded.

Some commands affect the boot sequence. These commands require that the user configuration be

Copyright 2024 KAGA FEI Co., Ltd.

Downloaded from Arrow.com.

saved and a reset performed before they are applied. These commands are:

Code	Description
UART	Set the UART interface baudrate
SSEC	Set the desired security level of the service and characteristics
SXLF	Set the preferred LFCLK source

Copyright 2024 KAGA FEI Co., Ltd.

Downloaded from Arrow.com.

3.5 Factory Reset

In the event that the user wishes to erase all stored configuration settings and bonding information, a factory reset can be performed in two ways:

1. Holding the factory reset pin (P0.02) low and resetting the device
2. Issuing a **Factory Reset** command (FRST) with the “CONFIRM” keyword as a parameter

If either of these conditions are triggered, the device will erase all user configuration data during boot. The boot message will indicate that the device is using its default configuration. Once the reset is complete, the user should release the pin so that saved data is not erased on subsequent resets.

3.6 Power Control

The EJ2840MA2 supports a small number of power control features that users may configure.

3.6.1 Regulator Selection

By default, the EJ2840MA2 is configured to use Low-Dropout (LDO) regulators. DCDC regulators can optionally be selected for use, which may improve efficiency and power consumption. When using a DCDC regulator, it is necessary to mount external inductors. Please refer to sample circuits.

The following commands can be used to set and get the regulator configuration:

Code	Description
SREG	Set the regulator configuration to LDO or DCDC
GREG	Get the current regulator configuration

3.6.2 Power Save Mode

The EJ2840MA2 device can be set to enter power-save mode by pulling the specified IO pin low for a minimum of 0.5 seconds. After this time, the device will disable the UART interface and only enable it when data is sent from the device. This allows the device to shutdown the high speed clock when not in use for considerable power saving.

While this state is active, the device will be unable to accept commands. System events will continue to be emitted, and Bluetooth low energy activity will continue (advertisements, scanning, connection etc.). Full serial functionality can be restored by setting the power-save IO high for a minimum of 0.5 seconds. **Power save enabled (PWRL)** and **power save disabled (PWRH)** events will be displayed when the power save mode is changed.

3.6.3 Deep Sleep Mode

In EJ2840MA2, you can set the Deep Sleep Mode by setting the Deep Sleep Pin (P0.03) to the Low state and disconnecting or resetting the communication. Deep Sleep Mode can reduce power consumption more than Power Save Mode.
To wake up, set the Deep Sleep Pin to High.
* Please note that if the Deep Sleep Pin is in the Low state at startup, it cannot be started.

Copyright 2024 KAGA FEI Co., Ltd.

Downloaded from Arrow.com.

3.7 Clock Control

3.7.1 HFCLK Clock

With EJ2840MA2, it is possible to set the main clock. ". In the case of" Auto ", a communication error may occur due to the UART baud rate deviation depending on the specifications of the connection destination. In that case, only crystal oscillation should be used. Please use.

* Changing HFCLK to the external crystal setting will increase power consumption. Please make a judgment after actually measuring in your environment.

Code	Description
SXHF	Set the preferred HFCLK source
GXHF	Get the preferred HFCLK source

The HFCLK source is configured during the boot sequence, users must therefore issue a **SAVE** command and reset the module to apply changes to the device.

3.7.2 LFCLK Clock

The EJ2840MA2 device initially configures its low frequency clock (LFCLK) to use an internal RC oscillator synthesized from the HFCLK. When changing the setting to use an external oscillator that may reduce power consumption from LFCLK, it is necessary to mount an external crystal. Please see the reference circuits.
The following commands can be used to set and get the LFCLK configuration:

Code	Description
SXLF	Set the preferred LFCLK source
GXLF	Get the preferred LFCLK source
RCLF	Get the currently active LFCLK source

The LFCLK source is configured during the boot sequence, users must therefore issue a **SAVE** command and reset the module to apply changes to the device.

3.8 Direct Test Mode (DTM)

If DTM mode is selected during boot, the device will enter Direct Test Mode instead of the standard application. The device will remain in this mode until it is reset. The host's serial UART baudrate when using this feature must be set to 19200. Refer to Nordic's documentation on Direct Test Mode for information on using this feature.

3.9 Device Firmware Update (DFU)

The EJ2840MA2 device firmware can be updated via serial UART or OTA. Regarding DFU, please refer to the separate user manual for DFU available on our website.
[Device Firmware Update UserManual]

Copyright 2024 KAGA FEI Co., Ltd.

Downloaded from Arrow.com.

4. Interfaces

4.1 Types

The EJ2840MA2 device supports up to three interfaces for serial communication; UART.

4.1.1 UART

The UART interface operates on a default baudrate of 115200bps, no parity and 1 stop bit. Flow control is not used. Users can modify the baudrate using the following command:

Code	Description
UART	Set the UART interface baudrate

Valid baudrates are listed in the ”**Command API**”. baudrate settings are applied on boot, therefore the user must save configuration data to flash using the **SAVE** command and reset the device once the save is complete.
If the user cannot determine the baudrate of the device, a factory reset can be performed to return the interface to its default configuration.

4.2 Modes

Two communication modes are available: **Command** and **Through**. By default, the EJ2840MA2 is always in command mode and follows the formats outlined in section 3.1 Command and Event Formats. When the EJ2840MA2 is connected to a peer device and notifications are enabled on the peripheral’s **Read/Notify** characteristic, the communication mode will change depending on the state of the **mode select** pin. The default mode when notifications are enabled is **Through**, **Command** mode can be selected by pulling the pin high. A **Mode** (MODE) event will be generated whenever the mode is changed.

4.2.1 Command Mode

In **Command** mode, the EJ2840MA2 device follows the protocol described in section 3.1 Command and Event Formats. In order to send data over the link to a connected peer device, the **SEND** command can be used. Refer to section 5.5 Connections for information about when this command is available. A **Transmit complete** (BTTX) event will be generated when the data has been sent to the peer device. If data is received from the peer device, a **Data Received** (BTRX) event will be generated.

4.2.2 Through Mode

In **Through** mode, all data received on the current interface (UART) is queued directly for transmission over the link. Commands cannot be used in this mode. If the EJ2840MA2 device is configured in a central role **Write-without-response** operations are performed on the peripheral’s **Write** characteristic until the queue is empty. In peripheral role N**otification** operations will be performed until the queue is empty. Events will not be output while this mode is active, except **Mode** (MODE) events to notify the user that the mode has changed.
Attempting to send commands to the EJ2840MA2 while this mode is active will result in the command being transmitted to the peer device. The command will not be executed by the peer device.data received over the link (notifications or writes depending on the current role) will be output directly on the current interface.

* Note: In through-mode, the EJ2840MA2 module buffers data internally to transmit packets opportunistically as the softdevice internal buffers are emptied. The EJ2840MA2 buffers hold a maximum of 2kB of data. Sending large blocks of data will require some delay to prevent overflow. The duration of this hold-off time will be dependent on the connection interval and baudrate of the connection.

Copyright 2024 KAGA FEI Co., Ltd.

Downloaded from Arrow.com.

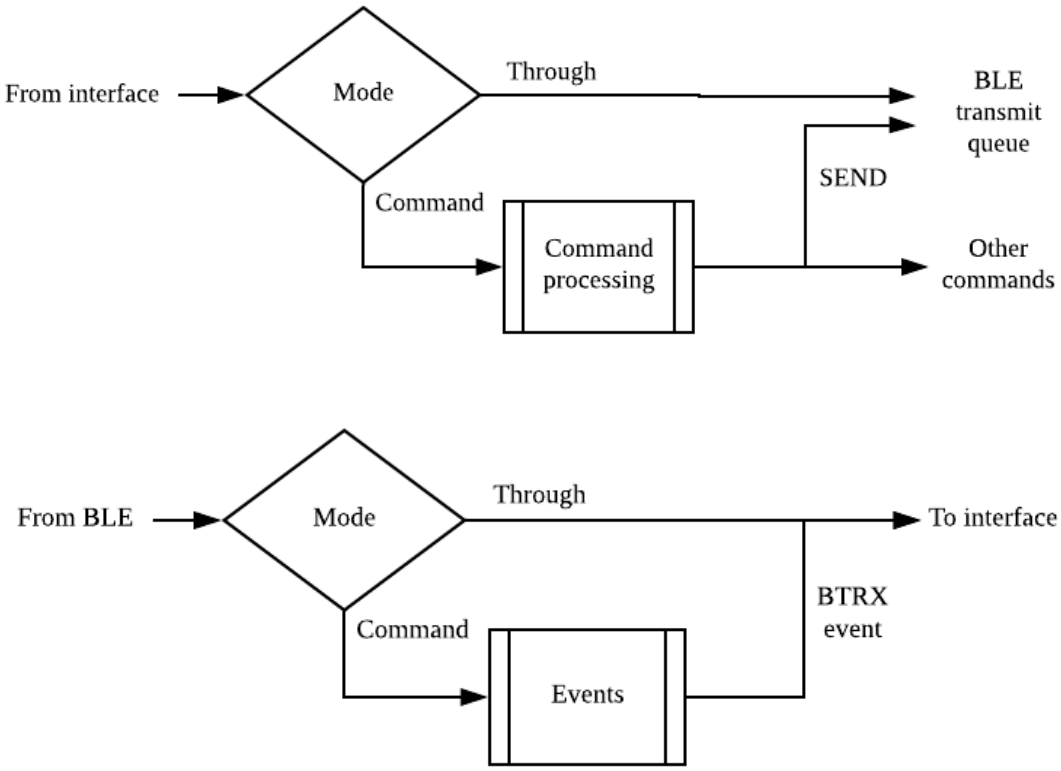

Figure 1: Data flow for command and through modes

Copyright 2024 KAGA FEI Co., Ltd.
Downloaded from Arrow.com.

5. Bluetooth Low Energy

5.1 Common Settings

5.1.1 Device Address

The EJ2840MA2 device contains a factory-preset randomized static address. This address is used to identify the device during advertising and scanning, except when private addressing modes are used. This address is also exchanged during bonding.
The user may change the address to one of their own choosing. The following commands can be used to set or get the current address.

Code	Description
SBAD	Set the static address that this device will use
GBAD	Read the currently assigned static address

If the **SBAD** command is used with an empty parameter, the original factory address will be used. In order to conform with Bluetooth address specifications, the uppermost two bits of any static address must always be '11'. Any address set by the user will automatically be modified to meet this specification. The address can be read following a successful update to confirm the new address.
Changing the device address will make this device unrecognizable to bonded peers.

5.1.2 Transmission Power

When a connection to another device is established, the softdevice will choose an appropriate transmission power based on each device's configuration.
The user can configure the softdevice's selected transmission power using the following commands:

Code	Description
TXPW	Set the transmission power to use
TXPR	Read the currently selected transmission power

The valid list of transmission power levels that can be selected are (dBm) [-40, -20, -16, -12, -8, -4, 0, 2, 3, 4, 5, 6, 7, 8]. A value of 'X' can also be used to allow the transmission power to be managed by the softdevice.

5.1.3 Automatic Start

The EJ2840MA2 device can be configured to begin advertising or scanning automatically based on its stored configuration. This allows the device to immediately begin advertising or scanning after the boot sequence has completed (following a power on or reset) or when a connection is lost. If the device is configured with a limited advertising or scanning timeout and the timeout expires, the operation will **NOT** be restarted.
The autostart settings can be configured using the commands listed below.

Code	Description
SASM	Enable or disable the autostart for the currently stored configuration
GASM	Check if autostart is enabled for this device

Copyright 2024 KAGA FEI Co., Ltd.

Downloaded from Arrow.com.

5.2 Roles

Configuration commands can be set regardless of the selected role. They will be applied when the device enters advertising (peripheral role) or scanning (central role). All commands that modify settings will be unavailable while the device is advertising, scanning or connected to another device, unless explicitly mentioned otherwise. Attempting to modify a setting in this state will return an error. All commands that read configuration values can be used in any state.

5.3 Advertising

5.3.1 Advertising Parameters

The advertising interval and timeout can be configured using the following commands:

Code	Description
ADS1	Set the advertising interval and the time before advertising is stopped
ADG1	Read the current advertising interval and timeout

When advertising using a non-connectable mode (i.e. beacons), the Bluetooth specification states that the minimum advertising interval must be >= 100ms. In the event that the user selects a non-connectable mode and the configured advertising interval is < 100ms, the device will advertise using a 100ms interval. The stored value will not be changed. Setting a timeout of 0 will perform advertising indefinitely.

5.3.2 Advertising Data

Users can configure the advertising and scan response PDUs to include a number of data fragments. The length of the PDU (31 bytes) must be considered when selecting the data to include. The fragments that comprise the advertising PDUs include:

Type	Length	Description
AD type flags	3 bytes	The advertising flags for this device
Manufacturer data	2 bytes + data length	User supplied custom data
Service UUID	18 bytes	The Original 128 bit service UUID
Device name	2 bytes + name length	The current device name

- AD type flags are always included in the advertising PDU and not included in the scan response PDU. Therefore the advertising PDU maximum number of bytes is 28.
- If the device name is included and the complete name does not fit into the PDU, the name will be truncated. There must be a minimum of 3 bytes available to include the device name.
- If the device name is changed, the name stored in the advertising data will be updated. Note that setting a longer name may result in truncation.
- If the total data requested does not fit inside the PDU an error will be returned.

The commands available for modifying advertising and scan response data include:

Code	Description
ADS3	Set the data to be displayed in the advertising PDU
ADG3	Read the current advertising PDU
ADS4	Set the data to be displayed in the scan response PDU
ADG4	Read the current scan response PDU

Setting an empty field for the user data will exclude user data from the PDU (refer to the "**Command API**" for details on the input parameters) . Note that data stored in the scan response PDU will only be available to scanners with active scanning enabled and a scannable advertising mode is selected. Reading the PDU will return the entire PDU as it will be seen by scanning devices.

Copyright 2024 KAGA FEI Co., Ltd.

Downloaded from Arrow.com.

Advertising PDU Examples

Initially the advertising PDU has 28 bytes available (31 for the scan response PDU).

AD Flags (3)	28 bytes available

Including the Original service UUID requires an extra 18 bytes.

AD Flags(3)	Original 128 bit Service UUID (16+2)	User data(2 + 10)	(2)

If the user wishes to use eight bytes of custom data and include the device name (e.g. 'Kfsa-B 5') then this will consume 10 + 10 bytes.

AD Flags(3)	User data (2 + 8)	"Kfsa-B 3" name (2 + 8)	8 bytes available

If the user attempts to include both the service UUID and 10 bytes of custom data an error will be returned as this requires two more bytes than are available. This configuration would fit inside the scan response PDU however as there are three extra bytes available due to the AD flags not being included.

AD Flags(3)	Original 128 bit Service UUID (16+2)	User data(2 + 10)	(2)

5.3.3 Beacon Data

When the device is configured in beacon mode, it will advertise using a PDU format that adheres to the iBeacon specification. In this mode, the user can select the proximity UUID, major, minor and measured power fields that will be included in the PDU. The company identifier is fixed to Apple's ID (0x004C) for compatibility with iOS beacon tracking features.

The commands available for modifying advertising and scan response data include:

Code	Description
ADS5	Configure the UUID, major, minor and power values to use in the beacon PDU
ADG5	Read the current beacon PDU

Reading the beacon PDU will return the entire PDU as it will be seen by scanning devices.

5.3.4 Advertising Modes

The EJ2840MA2 has four advertising modes available. The advertising data that will be used will depend on the mode selected.

Table 5: Advertising modes

Mode	Type	Extended	Advertising Set
1	Connectable, scannable	No	Advertising + scanning
2	Non-connectable, non-scannable	No	Beacon
3	Connectable, non-scannable	Yes	Advertising
4	Non-connectable, non-scannable	Yes	Beacon

Extended modes are able to utilize the Bluetooth 5 PHY selection features for long range or high rate transmission. Refer to section "5.3.5 PHY Selection" for details on configuring the PHY. Devices that do not support Bluetooth 5 extended advertising will be unable to receive advertising data or send scan/connection requests to the EJ2840MA2 device when extended advertising modes are used.

Copyright 2024 KAGA FEI Co., Ltd.

Downloaded from Arrow.com.

5.3.5 PHY Selection

The EJ2840MA2 supports the use of three PHY types, shown in Table 6: Supported PHY types. When extended advertising modes are used, the user can select which PHYs are used for primary and secondary advertising channels. When non-extended advertising modes are used the PHY values are not used.

Table 6: Supported PHY types

PHY	Type	Description
0	1Mbps	Standard, legacy
1	Coded	Long range(transmit:125 kbps)
2	2Mbps	High rate

The commands used for setting the PHYs are shown below:

Code	Description
ADS8	Set the primary and secondary PHY to use in extended modes
ADG8	Read the configured PHYs

When using Coded or 2Mbps PHYs, only devices that support these modes will receive advertising data. Connections established using extended modes will always use the secondary PHY for the initial configuration. PHY update requests are ignored.

5.3.6 Starting and Stopping Advertising

Advertising can be started and stopped using the following commands:

Code	Description
ADV1	Start advertising with the current configuration
ADV0	Stop advertising

While advertising is active, most configuration changes are not allowed. To change configuration settings advertising should first be stopped. If a timeout is specified, advertising will automatically stop when the time limit expires and an advertising timeout (**ADVT**) event wil be generated. If autostart is enabled, advertising will not restart if the user stops advertising or the timeout expires.

Copyright 2024 KAGA FEI Co., Ltd.

Downloaded from Arrow.com.

5.4 Scanning

5.4.1 Scan Parameters

The scan window, interval and duration can be configured using the following commands:

Code	Description
SCS1	Set scanning parameters
SCG1	Read configured scanning parameters
SCS2	Enable or disable active scanning
SCG2	Get the status of active scanning

The EJ2840MA2 device supports scanning on both 1Mbps and Coded (long range) PHYs, therefore it is required that the scan interval is a minimum of (2 * window). Setting a timeout of 0 will perform scanning indefinitely.
If active scanning is enabled, the EJ2840MA2 will generate scan requests to advertisers that are scannable.

5.4.2 Scanning

Scanning can be controlled by the user with the following commands:

Code	Description
SCN1	Start scanning with the current configuration
SCN0	Stop scanning

EJ2840MA2 devices will always enable scanning of legacy and extended advertising PDUs. Both 1Mbps and Coded PHYs are used for scanning primary advertising channels. The EJ2840MA2 supports scanning secondary advertising channels using 1Mbps, 2Mbps and Coded PHYs.
Each time scanning is initiated, the EJ2840MA2 device tracks addresses it receives advertising PDUs from. An advertising report event (ADVR) is generated each time an advertising PDU is received, up to a maximum of five events per address. A maximum of 30 unique addresses can be tracked. After this limit is reached PDUs from untracked addresses will be ignored and no events for that address will be generated. The list of tracked addresses each cleared each time scanning is started.
When scan filters are enabled (see section 5.4.3 Filtering), devices that do not match the filter requirements count towards the number of addresses that are tracked. No events will be generated for these devices. When accept listing is used, devices not present on the accept list will not count towards the number of tracked addresses.

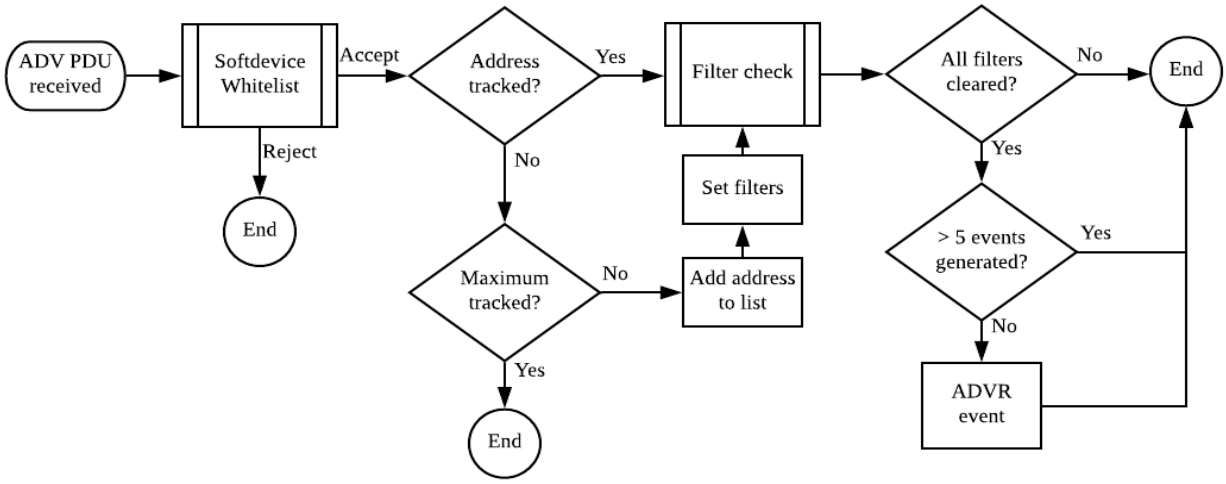

Figure 2: Receiving advertising PDUs during scanning

Copyright 2024 KAGA FEI Co., Ltd.

Downloaded from Arrow.com.

5.4.3 Filtering

Scanning in environments with many active advertising devices can result in a large number of advertising reports being generated. The EJ2840MA2 offers two levels of optional device filtering to alleviate this, accept lists and user-configurable name and service filters. For information about accept listing, refer to section “5.7.2 Accept listing”.

Code	Description
SFS1	Set the weakest RSSI value that will be permitted to pass the filter.
SFE1	Enables/disables RSSI Filter.
SFG1	Get the current RSSI filter threshold value and status.
SFS2	Set the pattern to search for in advertising data.
SFE2	Enables/disables data Filter.
SFG2	Get the current data filter pattern value and status.
SFS3	Add an address to the filter.
SFE3	Enables/disables Address filter.
SFG3	Get the current filter list and status.
SFD3	Remove the matching entry from the list.
SFC3	Clear filter from address list.
SFS4	Set the pattern to use in the name filter.
SFE4	Enables/disables device name filter.
SFG4	Get the current device name filter setting and status.
SFS5	Set the UUID that will be used in the service UUID filter.
SFE5	Enables/disables UUID filter.
SFG5	Get the current UUID filter setting and status.

The type of name (SHORT_LOCAL or COMPLETE_LOCAL) is not considered, only that the length and characters match what the user has specified. If the advertising device is using an incomplete name, the filter must specify the incomplete name instead of the complete name.

Note: That devices that do not pass the filtering checks will still count towards the maximum number of devices that can be detected during a single scan period.

Copyright 2024 KAGA FEI Co., Ltd.

Downloaded from Arrow.com.

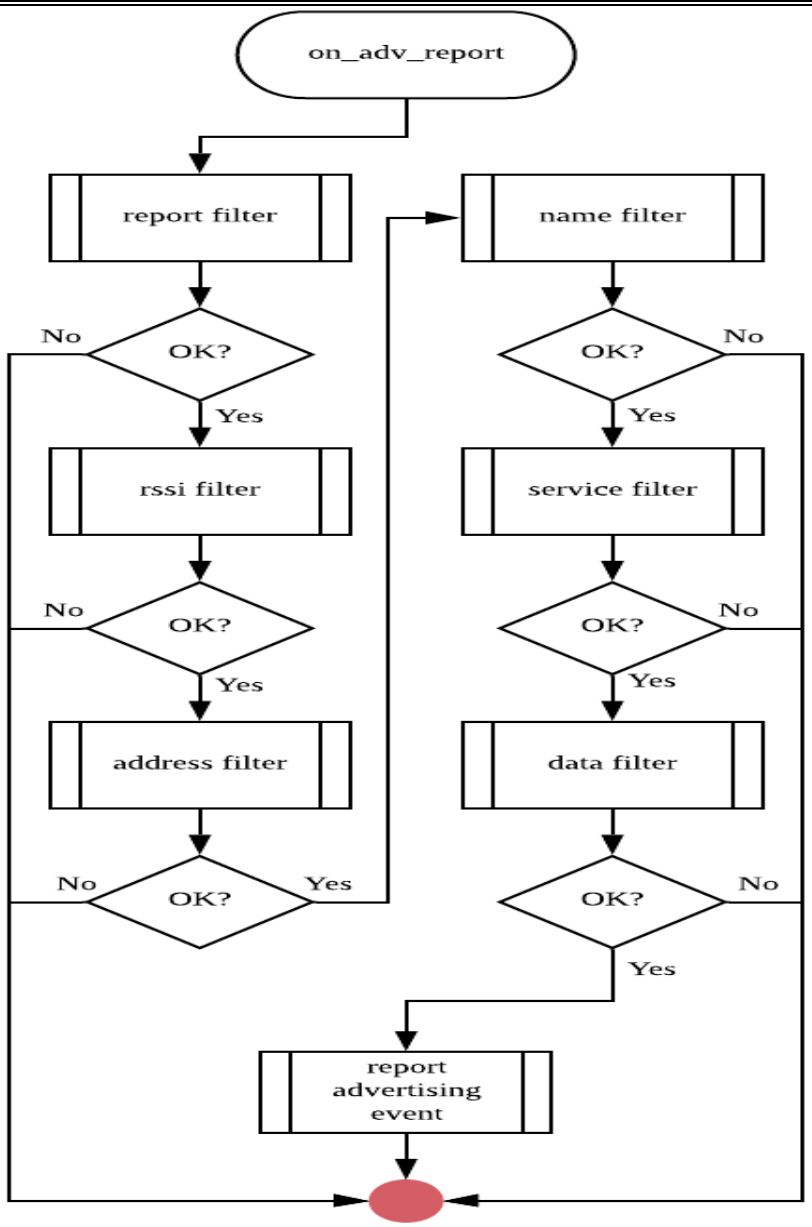

Figure 3: User-configurable scan filters

Copyright 2024 KAGA FEI Co., Ltd.

Downloaded from Arrow.com.

5.4.4 Beacon data

EJ2840MA2 can output advertising data as part of the report.
For the display, refer to the following command.

Code	Description
SCS5	Enable output of advertising data during advertising report events.
SCG5	Enable output of advertising data during advertising report events.
SCS6	Set the maximum number of reports per unique mac address.
SCG6	Get the maximum number of reports per unique mac address.
SCC6	During scanning, reset the number of advertising reports for all devices to 0.

5.4.5 Connecting

Users can initiate and cancel connections to peripheral devices using the following commands:

Code	Description
MCON	Initiate a connection to the specified address
CCON	Cancel a pending connection

The EJ2840MA2 device will use the scan parameters set in section “5.4.1 Scan Parameters” when initiating a connection. If a connection cannot be established before the timeout expires, a SCNT timeout event will be generated. If the remote peripheral device is advertising using extended PDUs, connections will be established using the peripheral’s secondary PHY.
If the remote peripheral is advertising using a private address, the EJ2840MA2 must establish the connection using its current address. If the peripheral has rotated to a new address and connection is attempted using an old address, the connection will fail. The current advertising address can be discovered by advertising reports generated during scanning.

Copyright 2024 KAGA FEI Co., Ltd.

Downloaded from Arrow.com.

The following is the flow of establishing a connection.

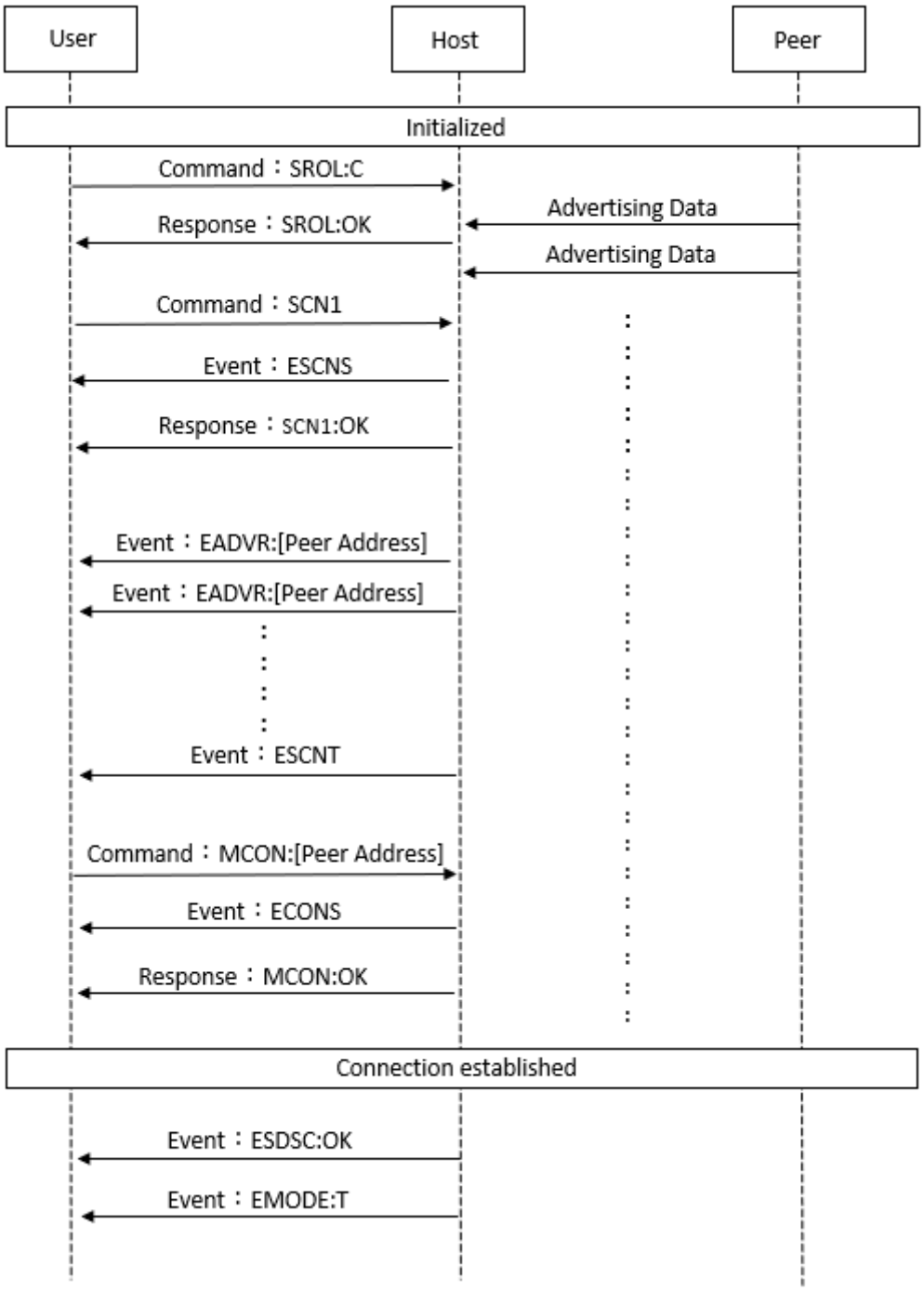

5.5 Connections

Upon connection being established with a peer device. The EJ2840MA2 will perform a sequence of events based on its current role.

5.5.1 Peripheral

In the peripheral role, the EJ2840MA2 device will send a connection parameter update shortly after the connection is established. If the **Reject Invalid Conn Parameters** (ADS7) setting is enabled, the EJ2840MA2 device will terminate the connection if the remote central fails to update the connection parameters to be within the configured range.
When the security level (see section 5.6.1 Security Levels) is higher than **Level 1**, the EJ2840MA2 device

Copyright 2024 KAGA FEI Co., Ltd.

Downloaded from Arrow.com.

will respond to read and write requests on characteristics with a **AUTH_REQ** status code. This informs the central device that pairing is required to meet the minimum security requirements before the characteristics can be accessed.
When notifications on the **Read/**Notify characteristic are enabled, the EJ2840MA2 device will enter **Command** or **Through** mode depending on the state of the **mode select** pin (P0.30). **Command** mode will be used whenever notifications are disabled.

Copyright 2024 KAGA FEI Co., Ltd.

Downloaded from Arrow.com.

5.5.2 Central

Upon connection to a remote peripheral, the EJ2840MA2 will check its bonding records to determine if encryption keys are available. If a bonding record for the peer device is found, the central will immediately encrypt the link. The EJ2840MA2 will then perform service and characteristic discovery on the peer. Upon completion, the central will confirm that the set service and characteristics are present. EJ2840MA2 outputs a Service Discovery: Incompatible (SDSC:NC) event after disconnection if the configured services and characteristics do not exist. If all service and characteristics are found, a **Service Discovery: Complete** (SDSC:OK) event is generated and the EJ2840MA2 will attempt to enable notifications on the **Read/Notify** characteristic (UUID 0003).

If the peripheral responds with **AUTH_REQ**, the EJ2840MA2 will initiate pairing and optional bonding based on the stored configuration. If the pairing is not successful the link will be terminated and a **Pairing Fail** (PAIR:FAIL) event will be generated. If successful, notifications will then be enabled.

Once notifications are enabled, the EJ2840MA2 device will enter **Command** or **Through** mode depending on the state of the **mode select** pin (P0.30). **Command** mode will be used whenever notifications are disabled.

5.5.3 Commands and Events

The following commands are available during connection when the EJ2840MA2 is in command mode.

Code	Description
SEND	Send up to 20 bytes of data to the connected peer
DCON	Terminate an established connection
DLEN	Get the number of bytes that can be sent

The following events can be generated while the EJ2840MA2 is connected and notifications are enabled on the peripheral device.

Code	Description
MODE	Event notifying that the mode has changed (C=Command, T=Through)
BTTX	Event notifying that a packet sent with SEND has been transmitted
BTRX	Event notifying that data was received from the peer device. The number of bytes will be provided along with the data

Copyright 2024 KAGA FEI Co., Ltd.

Downloaded from Arrow.com.

5.5.4 Service

5.5.4.1 Default Service

When using the default service, please use the following services.

Primary Service
Original Service UUID :
0x442F1570-8A00-9A28-CBE1-E1D4212D53EB
Characteristic
Original Characteristic UUID :
0x442F1571-8A00-9A28-CBE1-E1D4212D53EB (Read, Notification)
Original Characteristic UUID :
0x442F1572-8A00-9A28-CBE1-E1D4212D53EB (Write no response)

5.5.4.2 Custom service

EJ2840MA2 can set the service UUID to connect to.
Only one service UUID can be registered.

Code	Description
SIDS	Set the custom service UUID.
SIDD	Reset the UUID to the default value.
SIDR	Check the running service UUID.
SIDG	Get the custom service UUID

Copyright 2024 KAGA FEI Co., Ltd.

Downloaded from Arrow.com.

5.6 Security

5.6.1 Security Levels

There are four security levels that can be configured, corresponding to the four levels of permissions that are available in security mode 1 of the GAP layer. The restrictions of each level applies to the read and write permissions of the characteristics attached to the Original Service, including the CCCD descriptor for enabling notifications. The security level therefore only applies to the device when its role is configured as a peripheral.

Note: only security mode 1 is used (levels 1-4). Security mode 2 is not supported.

Table 7: Security levels

Level	Requirements	Description
1	None	No security features are enabled
2	Encryption	Link requires pairing
3	Encryption + MITM	Link requires pairing and authentication
4	LESC MITM encryption	Link requires LESC pairing and authentication

Security levels that require MITM authentication will require an IO capability that is not IOCAP_NONE. Refer to section 5.6.2 for details. Attempting to set a security level when insufficient IO capabilities are configured will result in an error.

Code	Description
SSEC	Set the desired security level
GSEC	Check the current security level

Changing the security level requires configuration data to saved to flash using the SAVE command followed by a reset once complete (see Figure 4: Configuring the security level). The new security permissions will be applied during boot.

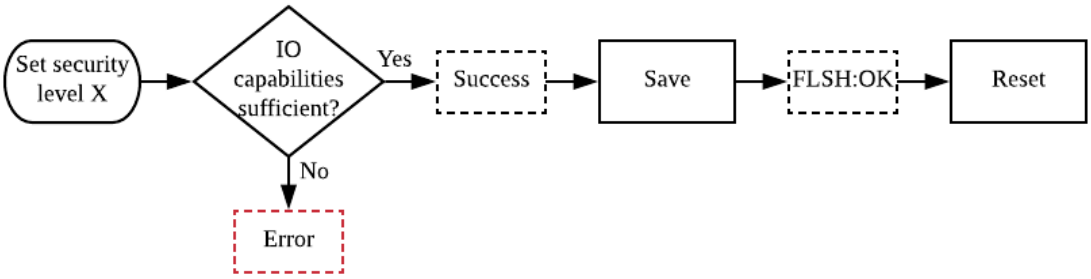

Figure 4: Configuring the security level

When the security level is raised, devices that have previously exchanged bonding information may no longer meet the minimum requirements. In this case, the bonding information should be erased as re-pairing is not supported.

Copyright 2024 KAGA FEI Co., Ltd.

Downloaded from Arrow.com.

5.6.2 Setting IO Capabilities and Out-of-Band Pairing

As a requirement of MITM authentication, some form of input or output is required to allow display or entry of passkeys/confirmation. The available values that can be set to specify the type of IO capabilities available are listed in Table 8. Users can also specify whether they wish to use Out-of-Band (OOB) methods for pairing.

Table 8: IO Capabilities

Value	Type	Description
0	IOCAPS_NONE	No input or output capabilities are available
1	IOCAPS_DISPLAY	A display is available for output
2	IOCAPS_DISPLAY_YESNO	A display is available for output. An input method for providing a yes or no response is available
3	IOCAPS_KEYBOARD	A character input method is available
4	IOCAPS_KEYBOARD_DISPLAY	A display is available for output. A character input method is available.

If you want to use the Out-of-Band (OOB) method for pairing, you can set it from the following command.

Code	Description
SOOB	Enable or disable out-of-band use during pairing
GOOB	Check the state of out-of-band pairing

If the security level is set to a level that requires MITM authentication, attempting to set the IO capabilities to IOCAPS_NONE will result in an error. The user must lower the security level to one that does not require MITM authentication.

The commands listed below can be used to set the capabilities, or get the current capabilities.

Code	Description
SIOC	Set the input and output capabilities of the host device
GIOC	Check the selected capabilities of the host device

Copyright 2024 KAGA FEI Co., Ltd.

Downloaded from Arrow.com.

5.6.3 Pairing

In order to provide a level of security, links can be encrypted through a process of key exchange and optional authentication, referred to as pairing. At the beginning of the pairing process, each device exchanges the type of security features it has available. If both devices accept the parameters given, the initiator (central) will select the pairing method that will be used to secure the link. If Man-in-the-middle protection is not required, the pairing method will typically default to Just Works. No user interaction is required for Just Works pairing, the user will be notified of the result once the pairing is completed.

Table 9: Pairing methods

Pairing Method	MITM	LESC	Security level
Just Works (legacy)	No	No	2
Passkey input	Yes	No	3
Out-of-band (legacy)	Yes	No	3
Just Works (LESC)	No	Yes	2
Numeric comparison	Yes	Yes	4
Passkey input (LESC)	Yes	Yes	4
Out-of-band (LESC)	Yes	Yes	4

If MITM protection is used during pairing, the application will generate events depending on the method selected. If Out-of-Band data is enabled by either the Host or Peer device during pairing, this method will be selected in all cases. The event will provide any parameters required by the user. The remote peer will also need to complete the associated action. Where input is required, the event code generated will match the command that the user should enter. Entering any of the pairing commands when not requested will result in an error.

Table 10: Pairing events

Event code	Host action	Peer action
PSKD	Display the provided 6 digit passkey	Input the 6 digit passkey displayed by the host
PSKC	Confirm the 6 digit passkey matches on the peer device	Confirm the 6 digit passkey matches on the host device
PSKI	Input the 6 digit passkey displayed by the peer	Display a 6 digit passkey
OOBD	Send the provided random/confirm values to the peer device through non- Bluetooth low energy interface	Send the provided random/confirm values to the host device through non- Bluetooth low energy interface
PAIR	Pairing has concluded. The parameter supplied with this event will confirm the success (OK) or failure (FAIL) of the pairing.	

Refer to the "**Command API**" for details about these events, parameters and associated commands that are required to successfully complete the pairing.

Pairing may fail under a number of situations. EJ2840MA2 configured as peripherals will reject pairing requests if:

- The initiator does not specify parameters that meet the minimum required level of security (e.g. no MITM where authentication is required, no LESC where LESC is required).
- A bonded peer attempts to re-pair a second time.
- The initiator requests OOB pairing but it is not enabled on this device.

EJ2840MA2 configured as centrals that receive a rejection status in response to a pairing request will generate an event notifying the user of the failure and disconnect from the peer device.

Copyright 2024 KAGA FEI Co., Ltd.

Downloaded from Arrow.com.

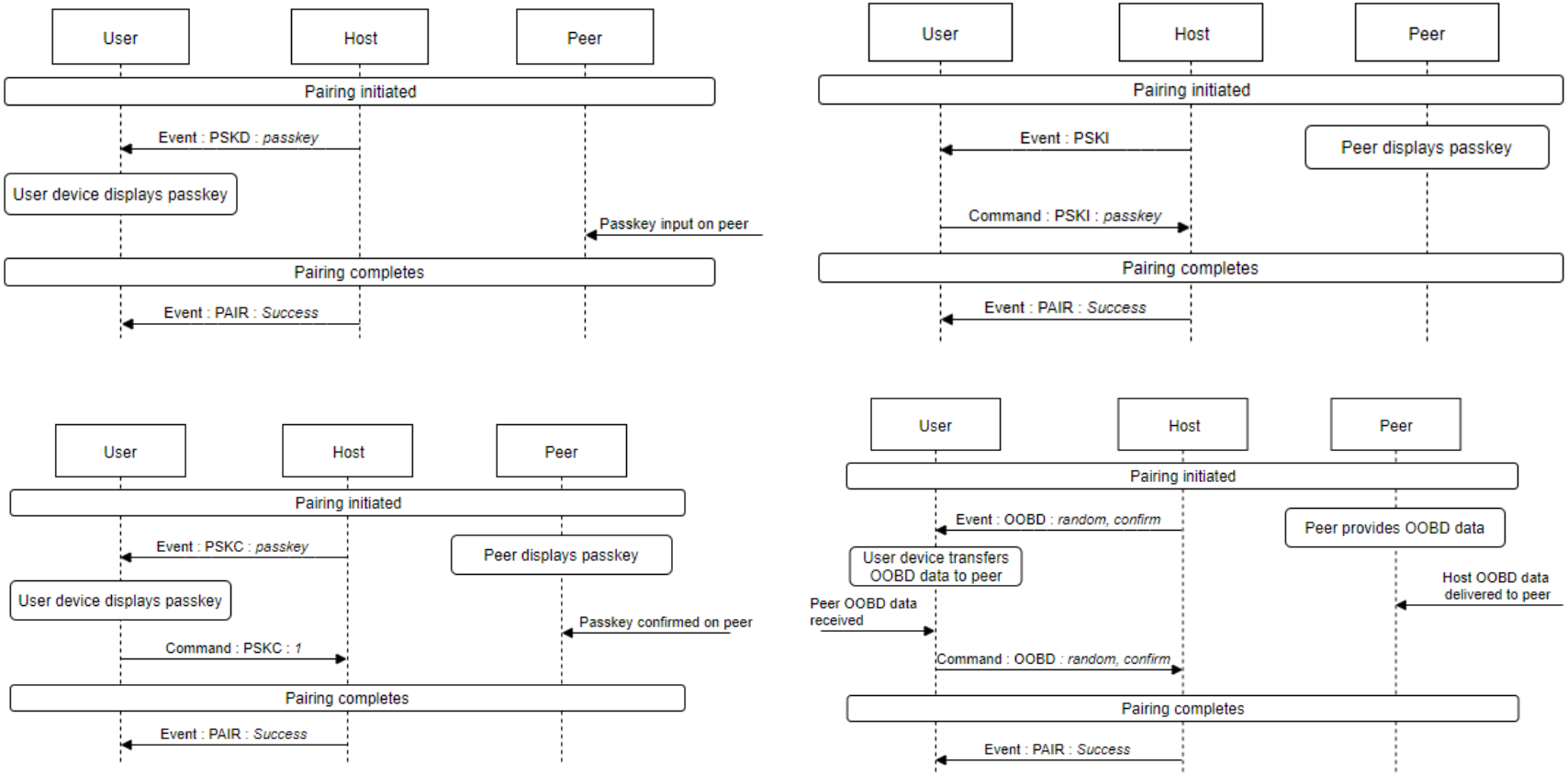

Figure 5 (Top) Passkey display, Passkey Input (Bottom) Numeric comparison, Out-of-band data

Copyright 2024 KAGA FEI Co., Ltd.

Downloaded from Arrow.com.

5.6.4 Bonding

Bonding is an extra stage after pairing where the two devices exchange Long-Term Keys (LTK). Devices that are bonded are typically not required to perform the pairing process again, except in cases where security levels change. The EJ2840MA2 will provide its Identity Resolving Key (IRK) and Identity Address (Bluetooth low energy MAC address) to the peer, as well as keys necessary for encrypting future connections.

Table 11: Bonding commands

Code	Command
SBND	Set bonding enabled
GBND	Get bonding enabled
CBND	Get the number of currently bonded peers
LBND	Get the addresses of the currently bonded peers
DBND	Delete all bonding information

Bonding can be enabled or disabled by the user with the commands shown in Table 11 . When disabled, all bonding requests will be rejected (pairing will still be performed). When enabled, bonding will be performed **IF** both devices request it and the pairing process is successful. In the event of bonding information being exchanged, the peer information will be written to flash memory and an event will be generated to the user signaling that a bond was performed. The event will also provide the total number of peers that have bonding data stored in flash memory. The EJ2840MA2 is configured to store bonding information for up to eight peers.

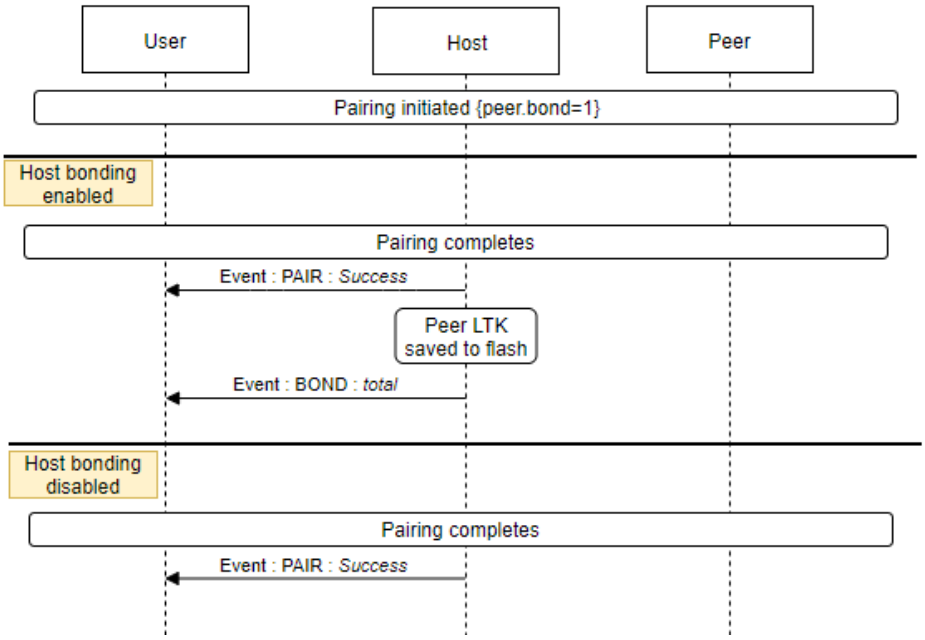

Figure 6: Bonding after successful pairing

If a EJ2840MA2 configured in the central role connects to a previously bonded device, the stored peer data will be used to automatically encrypt the link immediately upon connection. If the encryption key is not valid, the link will be terminated with a MIC_FAILURE status.

Copyright 2024 KAGA FEI Co., Ltd.

Downloaded from Arrow.com.

It may be necessary to delete existing bonding data. Situations include a previously bonded device is no longer using the Identity address or IRK provided during bonding, or to allow a new device to bond when the maximum number of bonds has been reached.
Deleting bonding information will remove data for **ALL** bonded devices and reset the number of available slots to maximum.

5.7 Privacy

5.7.1 Address Privacy

The EJ2840MA2 supports three types of address privacy modes. For private modes, the user can select the interval at which a new device is generated by the softdevice.

Mode	Address	Description
1	Static	The configured static address will be used
2	Private, resolvable	A new random address will be periodically generated. Bonded devices will recognize this device by its static address.
3	Private, non-resolvable	A new random address will be periodically generated. No devices will recognize this device.

The commands for selecting the privacy mode are listed below.

Code	Description
SPRV	Set the privacy mode (1 – 3) and the number of seconds between rotations
GPRV	Check the current privacy mode and rotation interval

5.7.2 Accept listing

The EJ2840MA2 supports optional accept listing for bonded devices. In the central role, advertising PDUs will only be received from known peers. In the peripheral role, only scan and connection requests from known peers will be acknowledged. If accept listing is enabled and there are no bonded peers available, the accept list will not be applied.
Users can set and check the state of the accept list using the following commands.

Code	Description
SWHT	Enable or disable accept listing for bonded peers.
GWHT	Check if accept listing is enabled or disabled.

Devices using resolvable private addresses that no longer use the Identity Address or IRK provided during bonding will no longer be detectable when accept listing is enabled. Devices using non-resolvable addresses will never be detectable when accept listing is enabled.

Copyright 2024 KAGA FEI Co., Ltd.

Downloaded from Arrow.com.

Command API

Table of Contents

6. Command List ····· **62**

7. APIs ····· **65**

7.1 Soft Reset (SRST) ····· 66

7.2 Hard Reset (HRST) ····· 67

7.3 Factory Reset (FRST) ····· 68

7.4 UART Params (UART) ····· 69

7.5 Set DCDC Regulator Config (SREG) ····· 70

7.6 Get DCDC Regulator Config (GREG) ····· 71

7.7 Set LFCLK Source (SXLF) ····· 72

7.8 Get LFCLK Source (GXLF) ····· 73

7.9 Get Active LFCLK Source (RLFC) ····· 74

7.10 Set HFCLK Source (SXHF) ····· 75

7.11 Get HFCLK Source (GXHF) ····· 76

7.12 Version (VERS) ····· 77

7.13 Read Board Model (MODL) ····· 78

7.14 Save (SAVE) ····· 79

7.15 Set Role (SROL) ····· 80

7.16 Get Role (GROL) ····· 81

7.17 Set Connection Parameters (SCPR) ····· 82

7.18 Get Connection Parameters (GCPR) ····· 83

7.19 Set Device Address (SBAD) ····· 84

7.20 Get Device Address (GBAD) ····· 85

7.21 Set TX Power (TXPW) ····· 86

7.22 Get TX Power (TXPR) ····· 87

7.23 Enable AutoStart (SASM) ····· 88

7.24 Get AutoStart Enabled (GASM) ····· 89

7.25 Send Data (SEND) ····· 90

7.26 Disconnect (DCON) ····· 91

7.27 Get Data Length (DLEN) ····· 92

7.28 Set Security Level (SSEC) ····· 93

7.29 Get Security Level (GSEC) ····· 94

7.30 Set IO Capabilities (SIOC) ····· 95

7.31 Get IO Capabilities (GIOC) ····· 96

7.32 Set OOB Data Enabled (SOOB) ····· 97

Downloaded from Arrow.com.

7.33 Get OOB Data Enabled (GOOB) ····· 98
7.34 Set Privacy Mode (SPRV) ····· 99
7.35 Get Privacy Mode (GPRV) ····· 100
7.36 Set Accept list Enabled (SWHT) ····· 102
7.37 Get Accept list Enabled (GWHT) ····· 103
7.38 Input OOB Data (OOBD) ····· 104
7.39 Input Passkey (PSKI) ····· 105
7.40 Confirm Passkey (PSKC) ····· 106
7.41 Set Bonding Mode (SBND) ····· 107
7.42 Get Bonding Mode (GBND) ····· 108
7.43 Get Number of Bonds (CBND) ····· 109
7.44 Get Bond List (LBND) ····· 110
7.45 Delete Bonds (DBND) ····· 111
7.46 Delete Individual Bonds (RBND) ····· 112
7.47 Start Advertising (ADV1) ····· 113
7.48 Stop Advertising (ADV0) ····· 114
7.49 Set Advertising Parameters (ADS1) ····· 115
7.50 Get Advertising Parameters (ADG1) ····· 116
7.51 Set Device Name (ADS2) ····· 117
7.52 Get Device Name (ADG2) ····· 118
7.53 Set Advertising Data (ADS3) ····· 119
7.54 Get Advertising Data (ADG3) ····· 120
7.55 Set Scan Data (ADS4) ····· 121
7.56 Get Scan Data (ADG4) ····· 122
7.57 Set Beacon Data (ADS5) ····· 123
7.58 Get Beacon Data (ADG5) ····· 124
7.59 Set Advertising Mode (ADS6) ····· 125
7.60 Get Advertising Mode (ADG6) ····· 126
7.61 Reject Invalid Connection Parameters (ADS7) ····· 127
7.62 Get Invalid Connection Rejection (ADG7) ····· 128
7.63 Set Extended PHY (ADS8) ····· 129
7.64 Get Extended PHY (ADG8) ····· 130
7.65 Set Factory Address Bytes (ADS9) ····· 131
7.66 Get Factory Address Bytes (ADG9) ····· 132
7.67 Start Scan (SCN1) ····· 133
7.68 Stop Scan (SCN0) ····· 134
7.69 Connect (MCON) ····· 135
7.70 Cancel Connect (CCON) ····· 136

Copyright 2024 KAGA FEI Co., Ltd.

Downloaded from Arrow.com.

7.71 Set Scan Parameters (SCS1) ····· 137
7.72 Get Scan Parameters (SCG1) ····· 138
7.73 Set Active Scan (SCS2) ····· 139
7.74 Get Active Scan (SCG2) ····· 140
7.75 Set Advertising Data Enabled (SCS5) ····· 141
7.76 Get Advertising Data Enabled (SCG5) ····· 142
7.77 Set Advertising Reports Limit (SCS6) ····· 143
7.78 Get Advertising Reports Limit (SCG6) ····· 144
7.79 Reset Advertising Reports (SCC6) ····· 145
7.80 Set Custom Service UUID (SIDS) ····· 146
7.81 Reset UUID (SIDD) ····· 147
7.82 Check Running Service UUID (SIDR) ····· 148
7.83 Get Custom Service UUID (SIDG) ····· 149
7.84 Set RSSI Filter Value (SFS1) ····· 150
7.85 Set RSSI Filter Enabled (SFE1) ····· 151
7.86 Get RSSI Filter Status and Value (SFG1) ····· 152
7.87 Set Data Filter Value (SFS2) ····· 153
7.88 Set Data Filter Enabled (SFE2) ····· 154
7.89 Get Data Filter Value and Status (SFG2) ····· 155
7.90 Set Address Filter (SFS3) ····· 156
7.91 Set Address Filter Enabled (SFE3) ····· 157
7.92 Get Address Filter List and Status (SFG3) ····· 158
7.93 Remove Address Filter Entry (SFD3) ····· 159
7.94 Clear Address List (SFC3) ····· 160
7.95 Set Device Name Filter (SFS4) ····· 161
7.96 Set Device Name Filter Enabled (SFE4) ····· 162
7.97 Get Device Name Filter Status and Settings (SFG4) ····· 163
7.98 Set UUID Filter (SFS5) ····· 164
7.99 Set UUID Filter Enabled (SFE5) ····· 165
7.100 Get UUID Filter Status and Settings (SFG5) ····· 166
8. Events ····· 167
8.1 Boot/Application Start (BOOT) ····· 167
8.2 Advertising Start (ADVS) ····· 168
8.3 Advertising Timeout (ADVT) ····· 168
8.4 Scan Start (SCNS) ····· 168
8.5 Scan Timeout (SCNT) ····· 169
8.6 Advertising Report (ADVR) ····· 169
8.7 Advertising Report with Data (ADVD) ····· 170

Copyright 2024 KAGA FEI Co., Ltd.

Downloaded from Arrow.com.

8.8 Connection Requested (CONS) ····· 171
8.9 Connection Established (CONN) ····· 171
8.10 Disconnection (DCON) ····· 172
8.11 Flash Operation Status (SAVE) ····· 172
8.12 Service Discovery (SDSC) ····· 173
8.13 Connection Mode (MODE) ····· 174
8.14 Pairing (PAIR) ····· 174
8.15 Bonding (BOND) ····· 175
8.16 All Bonds Deleted (DBND) ····· 175
8.17 Individual Bonds Deleted (RBND) ····· 176
8.18 Display PassKey (PSKD) ····· 176
8.19 Confirm PassKey (PSKC) ····· 177
8.20 Input PassKey (PSKI) ····· 177
8.21 Out-of-band Key Exchange (OOBD) ····· 178
8.22 Data Transmit Complete (BTTX) ····· 179
8.23 Data Received (BTRX) ····· 179
8.24 Low Power Mode Enabled (PWRL) ····· 180
8.25 Low Power Mode Disabled (PWRH) ····· 180
8.26 Deep Sleep Mode Enable (SHDN) ····· 181
9. Error Codes ····· 182

Copyright 2024 KAGA FEI Co., Ltd.

Downloaded from Arrow.com.

6. Command List

System API	
Function	*Command*
Soft reset	SRST
Hard reset	HRST
Factory reset	FRST
UART params	UART
Set DCDC regulator config	SREG
Get DCDC regulator config	GREG
Set LFCLK source	SXLF
Get LFCLK source (setting)	GXLF
Get LFCLK source (active)	RLFC
Version	VERS
Read Module Type	MODL
Save	SAVE

Common API	
Function	*Command*
Set role	SROL
Get role	GROL
Set connection param	SCPR
Get connection param	GCPR
Set device address	SBAD
Get device address	GBAD
Set TX power	TXPW
Get TX power	TXPR
Enable AutoStart	SASM
Get AutoStart enabled	GASM
Send data	SEND
Disconnect	DCON
Get data length	DLEN

Security	
Function	*Command*
Set security level	SSEC
Get security level	GSEC
Set IO capabilities	SIOC
Get IO capabilities	GIOC
Set OOB data enabled	SOOB
Get OOB data enabled	GOOB
Set privacy mode	SPRV
Get privacy mode	GPRV
Set accept list enabled	SWHT
Get accept list enabled	GWHT
Input OOB data	OOBD
Input passkey	PSKI
Confirm passkey	PSKC
Set bonding mode	SBND
Get bonding mode	GBND
Delete bonds	DBND

Copyright 2024 KAGA FEI Co., Ltd.

Downloaded from Arrow.com.

Bluetooth low energy Peripheral	
Function	*Command*
Start advertising	ADV1
Stop advertising	ADV0
Set advertising params	ADS1
Get advertising params	ADG1
Set device name	ADS2
Get device name	ADG2
Set advertising data	ADS3
Get advertising data	ADG3
Set scan data	ADS4
Get scan data	ADG4
Set beacon data	ADS5
Get beacon data	ADG5
Set advertising mode	ADS6
Get advertising mode	ADG6
Set invalid conn reject	ADS7
Get invalid conn reject	ADG7
Set extended PHY	ADS8
Get extended PHY	ADG8
Set Factory Address Bytes	ADS9
Get Factory Address Bytes	ADG9

Bluetooth low energy Central	
Function	*Command*
Start scan	SCN1
Stop scan	SCN0
Connect	MCON
Cancel connect	CCON
Set scan parameters	SCS1
Get scan parameters	SCG1
Set active scan	SCS2
Get active scan	SCG2
Set advertising data enabled	SCS5
Get advertising data enabled	SCG5
Set advertising reports limit	SCS6
Get advertising reports limit	SCG5
Reset advertising reports	SCC6

Bluetooth low energy Scan Filters	
Function	*Command*
Set RSSI value	SFS1
Set RSSI filter enabled	SFE1
Get RSSI filter status and value	SFG1
Set data filter value	SFS2
Set data filter enabled	SFE2
Get data filter value and status	SFG2
Set address filter	SFS3
Set address filter enabled	SFE3
Get address filter list and status	SFG3
Remove address filter entry	SFD3
Clear address list	SFC3
Set device name filter	SFS4
Set device name enabled	SFE4

Copyright 2024 KAGA FEI Co., Ltd.

Downloaded from Arrow.com.

Get filter status and settings	SFG4
Set UUID filter	SFS5
Set UUID filter enabled	SFE5
Get Filter status and settings	SFG5

Copyright 2024 KAGA FEI Co., Ltd.

Downloaded from Arrow.com.

7. APIs

Main APIs used by the system.

All input is restricted to printable ascii characters (decimal values 32-126 inclusive), except for the terminating <CRLF> characters

Character	Hex	Decimal	Character	Hex	Decimal	Character	Hex	Decimal
	20	32	@	40	64	`	60	96
!	21	33	A	41	65	a	61	97
"	22	34	B	42	66	b	62	98
#	23	35	C	43	67	c	63	99
$	24	36	D	44	68	d	64	100
%	25	37	E	45	69	e	65	101
&	26	38	F	46	70	f	66	102
'	27	39	G	47	71	g	67	103
(	28	40	H	48	72	h	68	104
)	29	41	I	49	73	i	69	105
*	2a	42	J	4a	74	j	6a	106
+	2b	43	K	4b	75	k	6b	107
,	2c	44	L	4c	76	l	6c	108
-	2d	45	M	4d	77	m	6d	109
.	2e	46	N	4e	78	n	6e	110
/	2f	47	O	4f	79	o	6f	111
0	30	48	P	50	80	p	70	112
1	31	49	Q	51	81	q	71	113
2	32	50	R	52	82	r	72	114
3	33	51	S	53	83	s	73	115
4	34	52	T	54	84	t	74	116
5	35	53	U	55	85	u	75	117
6	36	54	V	56	86	v	76	118
7	37	55	W	57	87	w	77	119
8	38	56	X	58	88	x	78	120
9	39	57	Y	59	89	y	79	121
:	3a	58	Z	5a	90	z	7a	122
;	3b	59	[	5b	91	{	7b	123
<	3c	60	¥	5c	92	|	7c	124
=	3d	61	]	5d	93	}	7d	125
>	3e	62	^	5e	94	~	7e	126
?	3f	63	_	5f	95			

Copyright 2024 KAGA FEI Co., Ltd.

Downloaded from Arrow.com.

7.1 Soft Reset (SRST)

Description

Soft Reset the device. Reset after 1 second on success, returns error if flash is busy

Request Parameters

None

Request Example

$SRST<CRLF>

Response

ERR10x : NG

OK : SUCCESS

Response Parameters

None

Response example

None

Copyright 2024 KAGA FEI Co., Ltd.

Downloaded from Arrow.com.

7.2 Hard Reset (HRST)

Description

Immediately reset the device. No checks on operational state.

Request Parameters

None

Request Example

$HRST<CRLF>

Response

ERR10x : NG

Response Parameters

None. The device will immediately reset.

Response example

None

Copyright 2024 KAGA FEI Co., Ltd.

Downloaded from Arrow.com.

7.3 Factory Reset (FRST)

Description

Factory the device. Device will reset and reset all the values to defaults

Request Parameters

Parameter Name	Value	Comments
Confirmation	CONFIRM	

Request Example

$FRST:CONFIRM<CRLF>

Response

ERR10x : NG

Response Parameters

None. The device will immediately reset.

Response example

None

Note

When Factory Reset is executed, do not reset or disconnect power during the 1-second module restart process.

Copyright 2024 KAGA FEI Co., Ltd.

Downloaded from Arrow.com.

7.4 UART Params (UART)

Description

Sets the UART Baudrate for the device. The configuration data must be saved and the device reset to apply the settings.

Request Parameters

Parameter Name	Value	Comments
Baudrate	1200,2400,4800,9600, 14400,19200,28800,38400, 57600,76800,115200,230400, 250000,460800,921600,1000000	Default：115200

Request Example

$UART:115200<CRLF>

Response

ERR10x : NG

OK : SUCCESS

Response Parameters

None

Response example

None

Copyright 2024 KAGA FEI Co., Ltd.

Downloaded from Arrow.com.

7.5 Set DCDC Regulator Config (SREG)

Description

Sets whether the DCDC regulators are enabled or disabled. On success the changes will be applied immediately.

Request Parameters

Parameter Name	Value	Comments
Enabled	0, 1	0 – Use LDO 1 – Use DCDC regulators Default : 0

Request Example

$SREG:1<CRLF>

Response

ERR10x : NG

OK : SUCCESS

Response Parameters

None

Response example

None

Copyright 2024 KAGA FEI Co., Ltd.

Downloaded from Arrow.com.

7.6 Get DCDC Regulator Config (GREG)

Description

Returns the configuration of the DCDC regulators.

Request Parameters

None

Request Example

$GREG<CRLF>

Response

ERR10x : NG

OK : SUCCESS

Response Parameters

Parameter Name	Value	Comments
Enabled	0, 1	0 – LDO 1 – DCDC

Response example

GREG:1<CRLF>

Copyright 2024 KAGA FEI Co., Ltd.

Downloaded from Arrow.com.

7.7 Set LFCLK Source (SXLF)

Description

Selects the LFCLK source to use (internal RC oscillator or external 32kHz oscillator). When setting the source, a SAVE operation followed by an application reset is required.

Request Parameters

Parameter Name	Value	Comments
LFCLK selection	0 – Internal RC 1 – External 32kHz	Default：0

Request Example

$SXLF:1<CRLF>

Response

ERR10x : NG

OK : SUCCESS

Response Parameters

None

Response example

None

Copyright 2024 KAGA FEI Co., Ltd.

Downloaded from Arrow.com.

7.8 Get LFCLK Source (GXLF)

Description

Returns the LFCLK source selected by the SXLF setting. This may differ to the active LFCLK source if the system has not been restarted since the configuration was modified.

Request Parameters

None

Request Example

$GXLF<CRLF>

Response

ERR10x : NG

Response Parameters

Parameter Name	Value	Comments
LFCLK source	0 – Internal RC 1 – External 32kHz	

Response example

GXLF:1<CRLF>

Copyright 2024 KAGA FEI Co., Ltd.

Downloaded from Arrow.com.

7.9 Get Active LFCLK Source (RLFC)

Description

Returns the LFCLK source currently being used by the module.

Request Parameters

None

Request Example

$RLFC<CRLF>

Response

ERR10x : NG

Response Parameters

Parameter Name	Value	Comments
LFCLK source	0 – Internal RC 1 – External 32kHz	

Response example

RLFC:1<CRLF>

Copyright 2024 KAGA FEI Co., Ltd.

Downloaded from Arrow.com.

7.10 Set HFCLK Source (SXHF)

Description

Automatic switching between internal RC and crystal oscillator, or crystal oscillator only. When setting the source, a SAVE operation followed by an application reset is required.

Request Parameters

Parameter Name	Value	Comments
HFCLK selection	0 -> Auto(Default) 1 -> External	Default : 0

Request Example

$SXHF:1<CRLF>

Response

ERR10x : NG

OK : SUCCESS

Response Parameters

None

Response example

None

Copyright 2024 KAGA FEI Co., Ltd.

Downloaded from Arrow.com.

7.11 Get HFCLK Source (GXHF)

Description

Returns the HFCLK source selected by the SXHF setting. This may differ to the active HFCLK source if the system has not been restarted since the configuration was modified.

Request Parameters

None

Request Example

$GXHF<CRLF>

Response

ERR10x : NG

OK : SUCCESS

Response Parameters

Parameter Name	Value	Comments
HFCLK source	0 -> Auto(Default) 1 -> External	

Response example

$GXHF:1<CRLF>

Copyright 2024 KAGA FEI Co., Ltd.

Downloaded from Arrow.com.

7.12 Version (VERS)

Description

Gets the version number of the firmware.

Request Parameters

None

Request Example

$VERS<CRLF>

Response

ERR10x : NG

OK : SUCCESS

Response Parameters

Parameter Name	Value	Comments
Version	X.Y.Z	Version number

Response example

$VERS:5.1.8<CRLF>

Copyright 2024 KAGA FEI Co., Ltd.

Downloaded from Arrow.com.

7.13 Read Board Model (MODL)

Description

Gets the Part number of the hardware module. IO assignments will change depending on which model of module is used. Some APIs may not be available depending on the model type.

Request Parameters

None

Request Example

$MODL<CRLF>

Response

ERR10x : NG

OK : SUCCESS

Response Parameters

Parameter Name	Value	Comments
Model	*xxxxxx*	Model Type

Response example

$MODL:EJ2840<CRLF>

Copyright 2024 KAGA FEI Co., Ltd.

Downloaded from Arrow.com.

7.14 Save (SAVE)

Description

Save current configuration to flash, event is posted on completion

Request Parameters

None

Request Example

$SAVE<CRLF>

Response

ERR10x : NG

OK : SUCCESS

Response Parameters

None

Response example

None

Note

When executing the SAVE command, do not reset or turn off the power until the completion of the process is notified (ESAVE event: estimated time max 700msec).

Copyright 2024 KAGA FEI Co., Ltd.

Downloaded from Arrow.com.

7.15 Set Role (SROL)

Description

Set the device to peripheral or central role.

Request Parameters

Parameter Name	Value	Comments
Role	C -> Central P -> Peripheral	Default : P

Request Example

$SROL:C<CRLF>

Response

ERR10x : NG

OK : SUCCESS

Response Parameters

None

Response example

None

Copyright 2024 KAGA FEI Co., Ltd.

Downloaded from Arrow.com.

7.16 Get Role (GROL)

Description

Gets the device current role, Central or Peripheral.

Request Parameters

None

Request Example

$GROL<CRLF>

Response

ERR10x : NG

OK : SUCCESS

Response Parameters

Parameter Name	Value	Comments
Role	C -> Central P -> Peripheral	

Response example

None

Copyright 2024 KAGA FEI Co., Ltd.

Downloaded from Arrow.com.

7.17 Set Connection Parameters (SCPR)

Description

Set the preferred connection parameters. In central mode these connection parameters will be used when a connection is initiated. Peripherals will send a connection parameter update to the central with these parameters after 3 seconds.

Request Parameters

Parameter Name	Value	Comments
Interval Min	6 – 3200	1.25ms units Default : 80 (100ms)
Interval Max	6 – 3200	1.25ms units Default : 160 (200ms)
Latency	0 – 499	Default : 0
Supervision Timeout	10 - 3200	10ms units Default : 400 (4s)

Timeout must be a minimum of ((1 + latency) x max interval) * 2

Request Example

$SCPR:100:200:0:3200<CRLF>

Response

ERR10x : NG

OK : SUCCESS

Response Parameters

None

Response example

None

Copyright 2024 KAGA FEI Co., Ltd.

Downloaded from Arrow.com.

7.18 Get Connection Parameters (GCPR)

Description

Get the current connection parameters.

Request Parameters

None

Request Example

$GCPR<CRLF>

Response

ERR10x : NG

OK : SUCCESS

Response Parameters

Parameter Name	Value	Comments
Interval Min	6 – 3200	1.25ms units
Interval Max	6 – 3200	1.25ms units
Latency	0 – 499	
Timeout	10 - 3200	10ms units

Response example

$GCPR: 100:200:0:3200<CRLF>

Copyright 2024 KAGA FEI Co., Ltd.

Downloaded from Arrow.com.

7.19 Set Device Address (SBAD)

Description

Sets the device's address. This address will be used when the privacy mode is disabled.

Request Parameters

Parameter Name	Value	Comments
Address	up to 12 ascii-format hex characters	Use an empty field to revert to the factory default Default：factory condition

The uppermost 2 bits of the address will always be set to meet Bluetooth specification. If the user inputs an address with these bits not set, they will be set by the firmware.

Request Example

$SBAD: 23456789ABCD<CRLF>

$SBAD:<CRLF>

Response

ERR10x : NG

OK : SUCCESS

Response Parameters

None

Response example

None

Copyright 2024 KAGA FEI Co., Ltd.

Downloaded from Arrow.com.

7.20 Get Device Address (GBAD)

Description

Get the device's address.

Request Parameters

None

Request Example

$GBAD<CRLF>

Response

ERR10x : NG

OK : SUCCESS

Response Parameters

Parameter Name	Value	Comments
Address	less than or equal to 12 Hex Characters	

Response example

$GBAD: E3456789ABCD<CRLF>

Copyright 2024 KAGA FEI Co., Ltd.

Downloaded from Arrow.com.

7.21 Set TX Power (TXPW)

Description

Sets the transmission power for the radio.

Request Parameters

Parameter Name	Value	Comments
TX Power	-40, -20, -16, -12, -8, -4, 0, 2, 3, 4, 5, 6, 7, 8, X	If the value is set to 'X', the transmission power to be managed by the SoftDevice. Default : X

Request Example

$TXPW:2<CRLF>

$TXPW:X<CRLF>

Response

ERR10x : NG

OK : SUCCESS

Response Parameters

None

Response example

None

Copyright 2024 KAGA FEI Co., Ltd.

Downloaded from Arrow.com.

7.22 Get TX Power (TXPR)

Description

Gets the transmission power for the radio.

Request Parameters

None

Request Example

$TXPR<CRLF>

Response

ERR10x : NG

OK : SUCCESS

Response Parameters

Parameter Name	Value	Comments
TX Power	-40, -20, -16, -12, -8, -4, 0, 2, 3, 4, 5, 6, 7, 8, X	If the value is set to 'X', the transmission power to be managed by the SoftDevice.

Response example

None

Copyright 2024 KAGA FEI Co., Ltd.

Downloaded from Arrow.com.

7.23 Enable AutoStart (SASM)

Description

When enabled, the device will automatically start scanning or advertising based on its current role. Automatic operations will take place on boot or after disconnection. Advertising or scanning timeouts will not trigger an automatic restart.

Request Parameters

Parameter Name	Value	Comments
Enabled Flag	0 -> Not enabled 1 -> Enable	Default : 1

Request Example

$SASM:1<CRLF>

Response

ERR10x : NG

OK : SUCCESS

Response Parameters

None

Response example

None

Copyright 2024 KAGA FEI Co., Ltd.

Downloaded from Arrow.com.

7.24 Get AutoStart Enabled (GASM)

Description

Gets the automatic advertising or scanning on reset or disconnect.

Request Parameters

None

Request Example

$GASM<CRLF>

Response

ERR10x : NG

OK : SUCCESS

Response Parameters

Parameter Name	Value	Comments
Enabled Flag	0 -> Not enabled 1 -> Enable	

Response example

$GASM:1<CRLF>

Copyright 2024 KAGA FEI Co., Ltd.

Downloaded from Arrow.com.

7.25 Send Data (SEND)

Description

Send data to the connected peer. Only available once notifications are enabled on the peripheral device. Generates a transmission complete event (BTTX) once the data is sent.

The default maximum for any connection is 20 characters. This value may increase based on MTU maximum size with compatible devices. Refer to “7.27 Get Data Length (DLEN)”.

Request Parameters

Parameter Name	Value	Comments
Data	Max 20~244 characters	

Request Example

$SEND: ABC<CRLF>

Response

ERR10x : NG

OK : SUCCESS

Response Parameters

None

Response example

None

Copyright 2024 KAGA FEI Co., Ltd.

Downloaded from Arrow.com.

7.26 Disconnect (DCON)

Description

Terminate the current connection.

Request Parameters

None

Request Example

$DCON<CRLF>

Response

ERR10x : NG

OK : SUCCESS

Response Parameters

None

Response example

None

Copyright 2024 KAGA FEI Co., Ltd.

Downloaded from Arrow.com.

7.27 Get Data Length (DLEN)

Description

Read the maximum MTU size of the current connection. This value corresponds to the maximum number of characters that can be transmitted by the SEND command. The value will vary based on the limitations of the peer device. The MTU size will only change a maximum of once per connection.

The EJ2840MA2 devices support a maximum MTU size of 244 bytes.
This command is only available once notifications are enabled on the peripheral device.

Request Parameters

None

Request Example

$DLEN<CRLF>

Response

ERR10x : NG
OK : SUCCESS

Response Parameters

Parameter Name	Value	Comments
MTU maximum size	20 ~ 244	

Response example

$DLEN:125<CRLF>

Copyright 2024 KAGA FEI Co., Ltd.

Downloaded from Arrow.com.

7.28 Set Security Level (SSEC)

Description

Set the desired security level for the device's characteristics. The device configuration must be saved and reset to apply changes. Levels 3+ require IO capabilities > 0. Raising the security level may cause bonded peers to no longer have sufficient authentication, bonding data must be cleared to re-bond.

Request Parameters

Parameter Name	Value	Comments
Level	1 -> Open 2 -> Enc 3 -> Enc + Mitm 4 -> Mitm + Lesc	Default : 1

Request Example

$SSEC:1<CRLF>

Response

ERR10x : NG

OK : SUCCESS

Response Parameters

None

Response example

None

Copyright 2024 KAGA FEI Co., Ltd.

Downloaded from Arrow.com.

7.29 Get Security Level (GSEC)

Description

Gets the current security level for the device.

Request Parameters

None

Request Example

$GSEC<CRLF>

Response

ERR10x : NG

OK : SUCCESS

Response Parameters

Parameter Name	Value	Comments
Level	1 -> Open 2 -> Enc 3 -> Enc + Mitm 4 -> Mitm + Lesc	

Response example

$GSEC:1<CRLF>

Copyright 2024 KAGA FEI Co., Ltd.

Downloaded from Arrow.com.

7.30 Set IO Capabilities (SIOC)

Description

Set the available IO capabilities for the device (keyboard, display, etc). Used for determining pairing methods during MITM authentication. Attempting to set IO capabilities to 0 when security is 3+ will result in an error as MITM authentication is required.

Request Parameters

Parameter Name	Value	Comments
Capabilities	0 -> None 1 -> Display 2 ->Display+YesNo 3 -> Keyboard 4 ->Keyboard+Display	Default : 0

Request Example

$SIOC:0<CRLF>

Response

ERR10x : NG

OK : SUCCESS

Response Parameters

None

Response example

None

Copyright 2024 KAGA FEI Co., Ltd.

Downloaded from Arrow.com.

7.31 Get IO Capabilities (GIOC)

Description

Gets the available IO capabilities for the device (keyboard, display, etc)

Request Parameters

None

Request Example

$GIOC<CRLF>

Response

ERR10x : NG

OK : SUCCESS

Response Parameters

Parameter Name	Value	Comments
Capabilities	0 -> None 1 -> Display 2 ->Display+YesNo 3 -> Keyboard 4 ->Keyboard+Display	

Response example

$GIOC:2<CRLF>

Copyright 2024 KAGA FEI Co., Ltd.

Downloaded from Arrow.com.

7.32 Set OOB Data Enabled (SOOB)

Description

Enables/disables the use of out of band pairing. If enabled, pairing will always choose OOB. The device will require input capabilities.

Request Parameters

Parameter Name	Value	Comments
Enabled Flag	0 -> Not enabled 1 -> Enable	

Request Example

$SOOB:1<CRLF>

Response

ERR10x : NG

OK : SUCCESS

Response Parameters

None

Response example

None

Copyright 2024 KAGA FEI Co., Ltd.

Downloaded from Arrow.com.

7.33 Get OOB Data Enabled (GOOB)

Description

Gets the state (enable/disable) of the use of out of band pairing.

Request Parameters

None

Request Example

$GOOB<CRLF>

Response

ERR10x : NG

OK : SUCCESS

Response Parameters

Parameter Name	Value	Comments
Enabled Flag	0 -> Not enabled 1 -> Enable	

Response example

$GOOB:1<CRLF>

Copyright 2024 KAGA FEI Co., Ltd.

Downloaded from Arrow.com.

7.34 Set Privacy Mode (SPRV)

Description

Set the address privacy mode of the device. Selecting non-resolvable privacy will cause bonded peers to not recognize this device.

Request Parameters

Parameter Name	Value	Comments
Type	1 -> Fixed address (factory default or user set address). Rotation is not used 2 -> Resolvable. Randomized. Device can be identified 3 -> Non-resolvable. Randomized, not identifiable	Default : 1
Rotation	1 - 41400	How many seconds between address changes

Request Example

$SPRV:1:1<CRLF>

Response

ERR10x : NG

OK : SUCCESS

Response Parameters

None

Response example

None

Copyright 2024 KAGA FEI Co., Ltd.

Downloaded from Arrow.com.

7.35 Get Privacy Mode (GPRV)

Description

Gets the privacy mode for scanning/advertising.

Request Parameters

None

Request Example

$GPRV<CRLF>

Response

ERR10x : NG

OK : SUCCESS

Copyright 2024 KAGA FEI Co., Ltd.

Downloaded from Arrow.com.

Response Parameters

Parameter Name	Value	Comments
Type	1 -> Fixed address (factory default or user set address). Rotation is not used 2 -> Resolvable. Randomized. Device can be identified 3 -> Non-resolvable. Randomized, not identifiable	Default：0
Rotation	1 - 41400	How many seconds between address changes

Response example

None

Copyright 2024 KAGA FEI Co., Ltd.

Downloaded from Arrow.com.

7.36 Set Accept list Enabled (SWHT)

Description

Sets the use of accept listing for bonded peers. If enabled, only peers whose address is can be resolved are allowed through the accept ¥list filter. If no peers have bonded with this device, the accept list will not be applied.

Request Parameters

Parameter Name	Value	Comments
Enable accept list	0 = disabled 1 = enabled	

Request Example

$SWHT:1<CRLF>

Response

ERR10x : NG

OK : SUCCESS

Response Parameters

None

Response example

None

Copyright 2024 KAGA FEI Co., Ltd.

Downloaded from Arrow.com.

7.37 Get Accept list Enabled (GWHT)

Description

Get the enabled/disabled status of the accept list.

Request Parameters

None

Request Example

$GWHT<CRLF>

Response

ERR10x : NG

OK : SUCCESS

Response Parameters

Parameter Name	Value	Comments
Enable accept list	0 = disabled 1 = enabled	

Response example

None

Copyright 2024 KAGA FEI Co., Ltd.

Downloaded from Arrow.com.

7.38 Input OOB Data (OOBD)

Description

Used when out-of-band pairing is requested. The user must input the random and confirm values received from the remote peer through non-Bluetooth low energy communication.

Request Parameters

Parameter Name	Value	Comments
Value	<= 32 ascii-formatted hex	
Confirm Value	<= 32 ascii-formatted hex	

Request Example

$OOBD:1321A54F896BBC3E84C4ABB3D9C368EF:CF3AB24856EC32BA47E5B6C98799DADB<CRLF>

Response

ERR10x : NG

OK : SUCCESS

Response Parameters

None

Response example

None

Copyright 2024 KAGA FEI Co., Ltd.

Downloaded from Arrow.com.

7.39 Input Passkey (PSKI)

Description

Input Passkey. Used during pairing. User must input the passkey presented on the remote device during pairing and only after a passkey input event (PSKI). If the key is incorrect the user may attempt until the central times out the request.

Request Parameters

Parameter Name	Value	Comments
Passkey	6 digits	

Request Example

$PSKI:123456<CRLF>

Response

ERR10x : NG

OK : SUCCESS

Response Parameters

None

Response example

None

Copyright 2024 KAGA FEI Co., Ltd.

Downloaded from Arrow.com.

7.40 Confirm Passkey (PSKC)

Description

Confirm Passkey. Used during pairing. The user must verify that the passkey displayed on both devices matches and acknowledge using this command.

Request Parameters

Parameter Name	Value	Comments
Confirmation	0 -> Passkeys do not match 1 -> Passkeys match	

Request Example

$PSKC:1<CRLF>

Response

ERR10x : NG

OK : SUCCESS

Response Parameters

None

Response example

None

Copyright 2024 KAGA FEI Co., Ltd.

Downloaded from Arrow.com.

7.41 Set Bonding Mode (SBND)

Description

Enable/disable accepting bonding requests.

Request Parameters

Parameter Name	Value	Comments
Mode	0 -> Off. Bonding requests will be rejected. 1 -> On. Bonding request will be accepted if it meets the minimum security level.	Default : 1

Request Example

$SBND:1<CRLF>

Response

ERR10x : NG

OK : SUCCESS

Response Parameters

None

Response example

None

Copyright 2024 KAGA FEI Co., Ltd.

Downloaded from Arrow.com.

7.42 Get Bonding Mode (GBND)

Description

Gets the Accepting Bonding Requests Value.

Request Parameters

None

Request Example

$GBND<CRLF>

Response

ERR10x : NG

OK : SUCCESS

Response Parameters

Parameter Name	Value	Comments
Mode	0 -> Off. Bonding requests will be rejected. 1 -> On. Bonding request will be accepted if it meets the minimum security level.	

Response example

$GBND:0-<CRLF>

Copyright 2024 KAGA FEI Co., Ltd.

Downloaded from Arrow.com.

7.43 Get Number of Bonds (CBND)

Description

Read the current number of bonds.

Request Parameters

Parameter Name	Value	Comments
Count	0-8	

Request Example

None

Response

ERR10x : NG

OK : SUCCESS

Response Parameters

None

Response example

$CBND:2<CRLF>

Copyright 2024 KAGA FEI Co., Ltd.

Downloaded from Arrow.com.

7.44 Get Bond List (LBND)

Description

Print the addresses of the currently bonded peers.

Request Parameters

None

Request Example

$LBND<CRLF>

Response

ERR10x : NG

OK : SUCCESS

Response Parameters

Parameter Name	Value	Comments
Address	12 Hex Characters	Up to a maximum of 8 addresses

Response example

$LBND:123456789ABC:23456789ABCD<CRLF>

$LBND:<CRLF>

Copyright 2024 KAGA FEI Co., Ltd.

Downloaded from Arrow.com.

7.45 Delete Bonds (DBND)

Description

Delete all of the stored bonding information on the device.

Request Parameters

None

Request Example

$DBND<CRLF>

Response

ERR10x : NG

OK : SUCCESS

Response Parameters

None

Response example

None

Copyright 2024 KAGA FEI Co., Ltd.

Downloaded from Arrow.com.

7.46 Delete Individual Bonds (RBND)

Description

Deletes the bonding data of the specified address. Up to 8 items can be specified at the same time.

Request Parameters

Parameter Name	Value	Comments
[mac] up to 8	12 ascii-hex formatted characters per address	Up to a maximum of 8 addresses

Request Example

$RBND:EE87EA3E4160:F6FE5F035962:D2EC08EC68F9<CRLF>

Response

ERR10x : NG

OK : SUCCESS

Response Parameters

None

Response example

None

Copyright 2024 KAGA FEI Co., Ltd.

Downloaded from Arrow.com.

7.47 Start Advertising (ADV1)

Description

Begins advertising using the current configuration.

Request Parameters

None

Request Example

$ADV1<CRLF>

Response

ERR10x : NG

OK : SUCCESS

Response Parameters

None

Response example

None

Copyright 2024 KAGA FEI Co., Ltd.

Downloaded from Arrow.com.

7.48 Stop Advertising (ADV0)

Description

Stop the current advertising.

Request Parameters

None

Request Example

$ADV0<CRLF>

Response

ERR10x : NG

OK : SUCCESS

Response Parameters

None

Response example

None

Copyright 2024 KAGA FEI Co., Ltd.

Downloaded from Arrow.com.

7.49 Set Advertising Parameters (ADS1)

Description

Set the advertising interval and timeout.

Request Parameters

Parameter Name	Value	Comments
Interval	32 - 16384	Minimum interval for beacons is 100ms. If the stored value is lower 100ms will be used instead. [unit:0.625ms] Default：160 (100ms)
Timeout	0 - 65535	Timeout in seconds. 0 is unlimited. [unit:10ms] Default：1000 (10s)

Request Example

$ADS1:32:100<CRLF>

Response

ERR10x : NG

OK : SUCCESS

Response Parameters

None

Response example

None

Copyright 2024 KAGA FEI Co., Ltd.

Downloaded from Arrow.com.

7.50 Get Advertising Parameters (ADG1)

Description

Gets the set advertising interval and timeout.

Request Parameters

None

Request Example

$ADG1<CRLF>

Response

ERR10x : NG

OK : SUCCESS

Response Parameters

Parameter Name	Value	Comments
Interval	32 - 16384	0.625ms units
Timeout	0 - 65535	10ms units

Response example

$ADG1:32:100<CRLF>

Copyright 2024 KAGA FEI Co., Ltd.

Downloaded from Arrow.com.

7.51 Set Device Name (ADS2)

Description

Sets the device name that will be broadcast. If the device name is used in advertising data, setting a new name will update the advertising data. The name will be truncated if it does not fit.

Request Parameters

Parameter Name	Value	Comments
Name	<= 31 Character	Default：“Kfsa-B 5XXXX” XXXX: address 4Bytes

Request Example

$ADS2:TEST<CRLF>

Response

ERR10x : NG

OK : SUCCESS

Response Parameters

None

Response example

None

Copyright 2024 KAGA FEI Co., Ltd.

Downloaded from Arrow.com.

7.52 Get Device Name (ADG2)

Description

Gets the current device name.

Request Parameters

None

Request Example

$ADG2<CRLF>

Response

ERR10x : NG

OK : SUCCESS

Response Parameters

Parameter Name	Value	Comments
Name	<= 31 Character	

Response example

$ADG2:TEST<CRLF>

Copyright 2024 KAGA FEI Co., Ltd.

Downloaded from Arrow.com.

7.53 Set Advertising Data (ADS3)

Description

Sets the user manufacturer data that will be placed in the advertising PDU. The device name and Original service UUID can also be included. Size restrictions apply, the advertising PDU can hold 28 bytes. Refer to the FUNCTIONAL SPECIFICATION 5.3.2 Advertising Data document for details regarding the PDU capacity.

Request Parameters

Parameter Name	Value	Comments
Data	ascii-formatted hex characters	Uses 2 bytes + data length
Include name	0 -> exclude name 1 -> include name	Uses 2 bytes + name length. Default : 1
Include UUID	0 -> exclude service UUID 1 -> include service UUID	Uses 18 bytes Default : 0

Request Example

$ADS3:Test:0:1<CRLF>

Response

ERR10x : NG

OK : SUCCESS

Response Parameters

None

Response example

None

Copyright 2024 KAGA FEI Co., Ltd.

Downloaded from Arrow.com.

7.54 Get Advertising Data (ADG3)

Description

Returns the contents of the advertising PDU. The complete PDU is returned, as scanning devices will see it.

Request Parameters

None

Request Example

$ADG3<CRLF>

Response

ERR10x : NG

OK : SUCCESS

Response Parameters

Parameter Name	Value	Comments
PDU Data	ascii-formatted hex	

Response example

$ADG3:02010606FF3132333435<CRLF>

Copyright 2024 KAGA FEI Co., Ltd.

Downloaded from Arrow.com.

7.55 Set Scan Data (ADS4)

Description

Sets the user manufacturer data that will be placed in the advertising PDU. The device name and Original service UUID can also be included. Size restrictions apply, the scan response PDU can hold 31 bytes as AD flags are not present. Refer to the FUNCTIONAL SPECIFICATION 5.3.2 Advertising Data document for details regarding the PDU capacity.

Request Parameters

Parameter Name	Value	Comments
Data	ascii-formatted hex characters	Uses 2 bytes + data length
Include name	0 -> exclude name 1 -> include name	Uses 2 bytes + name length.
Include UUID	0 -> exclude service UUID 1 -> include service UUID	Uses 18 bytes

Request Example

$ADS4:Test:1:1<CRLF>

Response

ERR10x : NG

OK : SUCCESS

Response Parameters

None

Response example

None

Copyright 2024 KAGA FEI Co., Ltd.

Downloaded from Arrow.com.

7.56 Get Scan Data (ADG4)

Description

Returns the contents of the scan response PDU. The complete PDU is returned, as scanning devices will see it.

Request Parameters

None

Request Example

$ADG4<CRLF>

Response

ERR10x : NG

OK : SUCCESS

Response Parameters

None

Response example

$ADG4:02010608093132333435363738<CRLF>

Copyright 2024 KAGA FEI Co., Ltd.

Downloaded from Arrow.com.

7.57 Set Beacon Data (ADS5)

Description

Set the beacon mode data values.

Request Parameters

Parameter Name	Value	Comments
Proximity UUID	32 ascii-formatted hex characters	
Major	4 ascii-formatted hex characters	
Minor	4 ascii-formatted hex characters	
Power	0-128	Power is negative dBm in decimal

Request Example

$ADS5:ABCDABCDABCDABCDABCDABCDABCDABCD:0001:0002:100<CRLF>

Response

ERR10x : NG

OK : SUCCESS

Response Parameters

None

Response example

None

Copyright 2024 KAGA FEI Co., Ltd.

Downloaded from Arrow.com.

7.58 Get Beacon Data (ADG5)

Description

Returns the raw PDU data.

Request Parameters

None

Request Example

$ADG5<CRLF>

Response

ERR10x : NG

OK : SUCCESS

Response Parameters

$ADG5:0201061AFF4C000215ABCDABCDABCDABCDABCDABCDABCDABCD000100029C<CRLF>

Beacon Part	Description
020106	Advertising flags
1AFF	Manufacturer Data identifier (length = 26 bytes)
4C00	Manufacturer Data company identifier (Apple)
0215	iBeacon identifier
Proximity UUID	Set by ADS5 command
Major	Set by ADS5 command
Minor	Set by ADS5 command
Measured Power	Set by ADS5 command (Hex)

Copyright 2024 KAGA FEI Co., Ltd.

Downloaded from Arrow.com.

7.59 Set Advertising Mode (ADS6)

Description

Sets the advertising mode the device will use.

Request Parameters

Parameter Name	Value	Comments
Mode	1 = (general) connectable + scannable 2 = (beacon) non-connectable + non-scannable 3 = (extended) connectable + non-scannable 4 = (extended beacon) non-connectable + non-scannable	Default : 1

Request Example

$ADS6:1 <CRLF>

Response

ERR10x : NG

OK : SUCCESS

Response Parameters

None

Response example

None

Copyright 2024 KAGA FEI Co., Ltd.

Downloaded from Arrow.com.

7.60 Get Advertising Mode (ADG6)

Description

Gets the advertising mode the device is using.

Request Parameters

Mode

Request Example

$ADG6<CRLF>

Response

ERR10x : NG

OK : SUCCESS

Response Parameters

Parameter Name	Value	Comments
Mode	1 = (general) connectable + scannable 2 = (beacon) non-connectable + non-scannable 3 = (extended) connectable + non-scannable 4 = (extended beacon) non-connectable + non-scannable	

Response example

$ADG6:1<CRLF>

Copyright 2024 KAGA FEI Co., Ltd.

Downloaded from Arrow.com.

7.61 Reject Invalid Connection Parameters (ADS7)

Description

Enable/disable rejection of unacceptable connection parameters. When enabled, the device will disconnect if the central does not update the connection to acceptable parameters.

Request Parameters

Parameter Name	Value	Comments
Reject invalid parameters	0 -> Disable 1 -> Enable	

Request Example

$ADS7:1<CRLF>

Response

ERR10x : NG

OK : SUCCESS

Response Parameters

None

Response example

None

Copyright 2024 KAGA FEI Co., Ltd.

Downloaded from Arrow.com.

7.62 Get Invalid Connection Rejection (ADG7)

Description

Gets the state of the rejection of unacceptable connection parameters.

Request Parameters

None

Request Example

$ADG7<CRLF>

Response

ERR10x : NG

OK : SUCCESS

Response Parameters

Parameter Name	Value	Comments
Enable Flag	0 -> Disabled 1 -> Enabled	

Response example

$ADG7:0<CRLF>

Copyright 2024 KAGA FEI Co., Ltd.

Downloaded from Arrow.com.

7.63 Set Extended PHY (ADS8)

Description

Sets the PHYs to use for advertising and connection. Only used when advertising modes are extended.

Request Parameters

Parameter Name	Value	Comments
Primary	0 -> 1Mbps (default) 1 -> CODED (Long range)	CODED is transmit at 125 kbps. Default : 0
Secondary	0 -> 1Mbps 1 -> CODED 2 -> 2Mbps (default)	Default : 2

Request Example

$ADS8:0:0<CRLF>

Response

ERR10x : NG

OK : SUCCESS

Response Parameters

None

Response example

None

Copyright 2024 KAGA FEI Co., Ltd.

Downloaded from Arrow.com.

7.64 Get Extended PHY (ADG8)

Description

Gets the PHYs that the device is using for advertising and connection in extended mode.

Request Parameters

None

Request Example

$ADG8<CRLF>

Response

ERR10x : NG

OK : SUCCESS

Response Parameters

Parameter Name	Value	Comments
Primary	0 -> 1Mbps (default) 1 -> CODED (Long range)	CODED is transmit at 125 kbps.
Secondary	0 -> 1Mbps 1 -> CODED 2 -> 2Mbps (default)	

Response example

$ADG8:0:0<CRLF>

Copyright 2024 KAGA FEI Co., Ltd.

Downloaded from Arrow.com.

7.65 Set Factory Address Bytes (ADS9)

Description

Set the number of bytes of the factory address to include at the end of the advertising name.

Request Parameters

Parameter Name	Value	Comments
Count	[0-6]	Default : 2

Request Example

$ADS9:2<CRLF>

Response

ERR10x : NG

OK : SUCCESS

Response Parameters

None

Response example

None

Copyright 2024 KAGA FEI Co., Ltd.

Downloaded from Arrow.com.

7.66 Get Factory Address Bytes (ADG9)

Description

Get the number of bytes of the factory address to include at the end of the advertising name.

Request Parameters

None

Request Example

None

Response

ERR10x : NG

OK : SUCCESS

Response Parameters

Parameter Name	Value	Comments
Count	[0-6]	

Response example

$ADG9:2<CRLF>

Copyright 2024 KAGA FEI Co., Ltd.

Downloaded from Arrow.com.

7.67 Start Scan (SCN1)

Description

Begin central scanning with the current configuration.

Request Parameters

None

Request Example

$SCN1<CRLF>

Response

ERR10x : NG

OK : SUCCESS

Response Parameters

None

Response example

None

Copyright 2024 KAGA FEI Co., Ltd.

Downloaded from Arrow.com.

7.68 Stop Scan (SCN0)

Description

Stops the current scanning.

Request Parameters

None

Request Example

$SCN0<CRLF>

Response

ERR10x : NG

OK : SUCCESS

Response Parameters

None

Response example

None

Copyright 2024 KAGA FEI Co., Ltd.

Downloaded from Arrow.com.

7.69 Connect (MCON)

Description

Initiate a connection to the specified device. Scanning parameters will be used during search.

Request Parameters

Parameter Name	Value	Comments
Address	12 ascii formatted hex characters	Address to connect

Request Example

$MCON:123456789ABC<CRLF>

Response

ERR10x : NG

OK : SUCCESS

Response Parameters

None

Response example

None

Copyright 2024 KAGA FEI Co., Ltd.

Downloaded from Arrow.com.

7.70 Cancel Connect (CCON)

Description

Cancel initiation of a connection. Will return an error if the device has already connected.

Request Parameters

None

Request Example

$CCON<CRLF>

Response

ERR10x : NG

OK : SUCCESS

Response Parameters

None

Response example

None

Copyright 2024 KAGA FEI Co., Ltd.

Downloaded from Arrow.com.

7.71 Set Scan Parameters (SCS1)

Description

Set the desired scan parameters.

Request Parameters

Parameter Name	Value	Comments
Duration	4 – 32767	0.625ms units Default : 400 (250ms)
Interval	8 – 65535	0.625ms units Default : 800 (500ms)
Timeout	0 – 65535	10ms units Default : 1000 (10s)

The scan interval must be at least 2x duration due to listening for Coded PHY during scanning.

Request Example

$SCS1:10:20:10<CRLF>

Response

ERR10x : NG

OK : SUCCESS

Response Parameters

None

Response example

None

Copyright 2024 KAGA FEI Co., Ltd.

Downloaded from Arrow.com.

7.72 Get Scan Parameters (SCG1)

Description

Get the scan parameters on the device.

Request Parameters

None

Request Example

$SCG1<CRLF>

Response

ERR10x : NG

OK : SUCCESS

Response Parameters

Parameter Name	Value	Comments
Duration	4 – 32767	0.625ms units
Interval	8 – 65535	0.625ms units
Timeout	0 – 65535	10ms units

Response example

$SCG1:10:20:10<CRLF>

Copyright 2024 KAGA FEI Co., Ltd.

Downloaded from Arrow.com.

7.73 Set Active Scan (SCS2)

Description

Enable/disable obtaining scan reports from advertisers.

Request Parameters

Parameter Name	Value	Comments
Enabled Flag	0 -> Not enabled 1 -> Enable	Default : 1

Request Example

$SCS2:0<CRLF>

Response

ERR10x : NG

OK : SUCCESS

Response Parameters

None

Response example

None

Copyright 2024 KAGA FEI Co., Ltd.

Downloaded from Arrow.com.

7.74 Get Active Scan (SCG2)

Description

Get the set value for obtaining scan reports from advertisers.

Request Parameters

None

Request Example

$SCG2<CRLF>

Response

ERR10x : NG

OK : SUCCESS

Response Parameters

Parameter Name	Value	Comments
Enabled Flag	0 -> Not enabled 1 -> Enable	

Response example

$SCG2:1<CRLF>

Copyright 2024 KAGA FEI Co., Ltd.

Downloaded from Arrow.com.

7.75 Set Advertising Data Enabled (SCS5)

Description

Enable output of advertising data during advertising report events.

Request Parameters

Parameter Name	Value	Comments
Enabled Flag	0 -> Disable 1 -> Enable Adv Data output	

Request Example

$SCS5:1<CRLF>

Response

ERR10x : NG

OK : SUCCESS

Response Parameters

None

Response example

None

Copyright 2024 KAGA FEI Co., Ltd.

Downloaded from Arrow.com.

7.76 Get Advertising Data Enabled (SCG5)

Description

Enable output of advertising data during advertising report events.

Request Parameters

Parameter Name	Value	Comments
Enabled Flag	0 -> Disable 1 -> Enable Adv Data output	

Request Example

$SCS5:1<CRLF>

Response

ERR10x : NG

OK : SUCCESS

Response Parameters

None

Response example

None

Copyright 2024 KAGA FEI Co., Ltd.

Downloaded from Arrow.com.

7.77 Set Advertising Reports Limit (SCS6)

Description

Set the maximum number of reports per unique mac address.

Request Parameters

Parameter Name	Value	Comments
Max count	[0-1000]	0 = no limit

Request Example

$SCS6:10<CRLF>

Response

ERR10x : NG

OK : SUCCESS

Response Parameters

None

Response example

None

Copyright 2024 KAGA FEI Co., Ltd.

Downloaded from Arrow.com.

7.78 Get Advertising Reports Limit (SCG6)

Description

Get the maximum number of reports per unique mac address.

Request Parameters

None

Request Example

$SCG6<CRLF>

Response

ERR10x : NG

OK : SUCCESS

Response Parameters

Parameter Name	Value	Comments
Max count	[0-1000]	

Response example

$SCG6:1<CRLF>

Copyright 2024 KAGA FEI Co., Ltd.

Downloaded from Arrow.com.

7.79 Reset Advertising Reports (SCC6)

Description

During scanning, reset the number of advertising reports for all devices to 0. If a mac address is supplied, only the counter for that address will be cleared.

Request Parameters

Parameter Name	Value	Comments
[mac] optional	12 ascii-formatted hex characters	

Request Example

$SCC6:CAC255C638C5<CRLF>

$SCC6<CRLF>

Response

ERR10x : NG

OK : SUCCESS

Response Parameters

None

Response example

None

Copyright 2024 KAGA FEI Co., Ltd.

Downloaded from Arrow.com.

7.80 Set Custom Service UUID (SIDS)

Description

Set the custom service UUID.

Request Parameters

Parameter Name	Value	Comments
UUID	32 hex digits characters	

Request Example

$SIDS:442F15708A009A28CBE1E1D4212D53EB<CRLF>

Response

ERR10x : NG

OK : SUCCESS

Response Parameters

None

Response example

None

Copyright 2024 KAGA FEI Co., Ltd.

Downloaded from Arrow.com.

7.81 Reset UUID (SIDD)

Description

Reset the UUID to the default value.

Request Parameters

None

Request Example

$SIDD<CRLF>

Response

ERR10x : NG

OK : SUCCESS

Response Parameters

None

Response example

None

Copyright 2024 KAGA FEI Co., Ltd.

Downloaded from Arrow.com.

7.82 Check Running Service UUID (SIDR)

Description

Check the running service UUID.

Request Parameters

None

Request Example

$SIDR <CRLF>

Response

ERR10x : NG

OK : SUCCESS

Response Parameters

Parameter Name	Value	Comments
UUID	32 hex digits characters	

Response example

$SIDR:442F15708A009A28CBE1E1D4212D53EB<CRLF>

Copyright 2024 KAGA FEI Co., Ltd.

Downloaded from Arrow.com.

7.83 Get Custom Service UUID (SIDG)

Description

Get the custom service UUID.

Request Parameters

None

Request Example

$SIDG<CRLF>

Response

ERR10x : NG

OK : SUCCESS

Response Parameters

Parameter Name	Value	Comments
UUID	32 hex digits characters	

Response example

$SIDG:442F15708A009A28CBE1E1D4212D53EB<CRLF>

Copyright 2024 KAGA FEI Co., Ltd.

Downloaded from Arrow.com.

7.84 Set RSSI Filter Value (SFS1)

Description

Set the weakest RSSI value that will be permitted to pass the filter. The set value is treated as a negative value inside EJ2840MA2.

Request Parameters

Parameter Name	Value	Comments
max_dBm	[0-125]	

Request Example

$SFS1:10 <CRLF>

Response

ERR10x : NG

OK : SUCCESS

Response Parameters

None

Response example

None

Copyright 2024 KAGA FEI Co., Ltd.

Downloaded from Arrow.com.

7.85 Set RSSI Filter Enabled (SFE1)

Description

Enables/disables RSSI Filter.

Request Parameters

Parameter Name	Value	Comments
Enabled Flag	0 -> Disable RSSI Filter 1 -> Enable RSSI Filter	Default : 0

Request Example

$SFE1:1<CRLF>

Response

ERR10x : NG

OK : SUCCESS

Response Parameters

None

Response example

None

Copyright 2024 KAGA FEI Co., Ltd.

Downloaded from Arrow.com.

7.86 Get RSSI Filter Status and Value (SFG1)

Description

Get the current RSSI filter threshold value and status.

Request Parameters

None

Request Example

$SFG1<CRLF>

Response

ERR10x : NG

OK : SUCCESS

Response Parameters

Parameter Name	Value	Comments
Enabled Flag	0 -> Disable RSSI Filter 1 -> Enable RSSI Filter	
max_dBm	[0-125]	

Response example

$SFG1:1:10<CRLF>

Copyright 2024 KAGA FEI Co., Ltd.

Downloaded from Arrow.com.

7.87 Set Data Filter Value (SFS2)

Description

Set the pattern to search for in advertising data.

Request Parameters

Parameter Name	Value	Comments
pattern	<=62 ascii-formatted hex characters	

Request Example

$SFS2:547973612D422035 <CRLF>

Response

ERR10x : NG

OK : SUCCESS

Response Parameters

None

Response example

None

Copyright 2024 KAGA FEI Co., Ltd.

Downloaded from Arrow.com.

7.88 Set Data Filter Enabled (SFE2)

Description

Enables/disables data Filter.

Request Parameters

Parameter Name	Value	Comments
Enabled Flag	0 -> Disable Data Filter 1 -> Enable Data Filter	Default : 0

Request Example

$SFE2:1<CRLF>

Response

ERR10x : NG

OK : SUCCESS

Response Parameters

None

Response example

None

Copyright 2024 KAGA FEI Co., Ltd.

Downloaded from Arrow.com.

7.89 Get Data Filter Value and Status (SFG2)

Description

Get the current data filter pattern value and status.

Request Parameters

None

Request Example

$SFG2<CRLF>

Response

ERR10x : NG

OK : SUCCESS

Response Parameters

Parameter Name	Value	Comments
Enabled Flag	0 -> Disable RSSI Filter 1 -> Enable RSSI Filter	
Pattern	<=62 ascii-formatted hex characters	

Response example

$SFG2:1:547973612D422035<CRLF>

Copyright 2024 KAGA FEI Co., Ltd.

Downloaded from Arrow.com.

7.90 Set Address Filter (SFS3)

Description

Add an address to the filter.

Up to 8 can be registered.

Request Parameters

Parameter Name	Value	Comments
address	<=12 ascii-formatted hex characters	

Request Example

$SFS3:020010<CRLF>

Response

ERR10x : NG

OK : SUCCESS

Response Parameters

None

Response example

None

Copyright 2024 KAGA FEI Co., Ltd.

Downloaded from Arrow.com.

7.91 Set Address Filter Enabled (SFE3)

Description

Enables/disables Address filter.

Request Parameters

Parameter Name	Value	Comments
Enabled Flag	0 -> Disable Address Filter 1 -> Enable Address Filter	Default : 0

Request Example

$SFE3:1<CRLF>

Response

ERR10x : NG

OK : SUCCESS

Response Parameters

None

Response example

None

Copyright 2024 KAGA FEI Co., Ltd.

Downloaded from Arrow.com.

7.92 Get Address Filter List and Status (SFG3)

Description

Get the current filter list and status.

Request Parameters

None

Request Example

$SFG3<CRLF>

Response

ERR10x : NG

OK : SUCCESS

Response Parameters

Parameter Name	Value	Comments
Enabled Flag	0 -> Disable 1 -> Enable	
Address list	<=12 ascii-formatted hex characters	

Response example

$SFG3:1:020106<CRLF>

Copyright 2024 KAGA FEI Co., Ltd.

Downloaded from Arrow.com.

7.93 Remove Address Filter Entry (SFD3)

Description

Remove the matching entry from the list.

Request Parameters

Parameter Name	Value	Comments
address	<=12 ascii-formatted hex characters	

Request Example

$SFD3:020106<CRLF>

Response

ERR10x : NG

OK : SUCCESS

Response Parameters

None

Response example

None

Copyright 2024 KAGA FEI Co., Ltd.

Downloaded from Arrow.com.

7.94 Clear Address List (SFC3)

Description

Clear filter from address list.

Request Parameters

None

Request Example

$SFC3<CRLF>

Response

ERR10x : NG

OK : SUCCESS

Response Parameters

None

Response example

None

Copyright 2024 KAGA FEI Co., Ltd.

Downloaded from Arrow.com.

7.95 Set Device Name Filter (SFS4)

Description

Set the pattern to use in the name filter.

Request Parameters

Parameter Name	Value	Comments
Name	<=31 ascii characters	Default : “Kfsa-B 5”

Request Example

$SFS4: Kfsa-B 5<CRLF>

Response

ERR10x : NG

OK : SUCCESS

Response Parameters

None

Response example

None

Copyright 2024 KAGA FEI Co., Ltd.

Downloaded from Arrow.com.

7.96 Set Device Name Filter Enabled (SFE4)

Description

Enables/disables device name filter.

Request Parameters

Parameter Name	Value	Comments
Enabled Flag	0 -> Disable Name Filter 1 -> Enable Name Filter	

Request Example

$SFE4:1<CRLF>

Response

ERR10x : NG

OK : SUCCESS

Response Parameters

None

Response example

None

Copyright 2024 KAGA FEI Co., Ltd.

Downloaded from Arrow.com.

7.97 Get Device Name Filter Status and Settings (SFG4)

Description

Get the current device name filter setting and status.

Request Parameters

None

Request Example

$SFG4<CRLF>

Response

ERR10x : NG

OK : SUCCESS

Response Parameters

Parameter Name	Value	Comments
Enabled Flag	0 -> Disable Name Filter 1 -> Enable Name Filter	
Name	<=31 ascii characters	

Response example

$SFG4:1:Kfsa-B 5<CRLF>

Copyright 2024 KAGA FEI Co., Ltd.

Downloaded from Arrow.com.

7.98 Set UUID Filter (SFS5)

Description

Set the UUID that will be used in the service UUID filter.

Request Parameters

Parameter Name	Value	Comments
UUID	32 ascii-format hex characters	

Request Example

$SFS5:442F15708A009A28CBE1E1D4212D53EB<CRLF>

Response

ERR10x : NG

OK : SUCCESS

Response Parameters

None

Response example

None

Copyright 2024 KAGA FEI Co., Ltd.

Downloaded from Arrow.com.

7.99 Set UUID Filter Enabled (SFE5)

Description

Enables/disables UUID filter.

Request Parameters

Parameter Name	Value	Comments
Enabled Flag	0 -> Disable UUID Filter 1 -> Enable UUID Filter	Default : 0

Request Example

$SFE5:1<CRLF>

Response

ERR10x : NG

OK : SUCCESS

Response Parameters

None

Response example

None

Copyright 2024 KAGA FEI Co., Ltd.

Downloaded from Arrow.com.

7.100Get UUID Filter Status and Settings (SFG5)

Description

Get the current UUID filter setting and status.

Request Parameters

None

Request Example

$SFG5<CRLF>

Response

ERR10x : NG

OK : SUCCESS

Response Parameters

Parameter Name	Value	Comments
Enabled Flag	0 -> Disable UUID Filter 1 -> Enable UUID Filter	
UUID	32 characters	

Response example

$SFG5:1:442F15708A009A28CBE1E1D4212D53EB<CRLF>

Copyright 2024 KAGA FEI Co., Ltd.

Downloaded from Arrow.com.

8. Events

Events that might be generated by the system depending on the status of the system.

8.1 Boot/Application Start (BOOT)

Description

Sent after application has booted from reset. The parameter shows the status of the boot.

Parameters

Parameter Name	Value	Comments
Status	DFLT -> Boot success with default settings. OK -> Boot success with saved user settings ERRx -> Error occurred during boot, application will use defaults, refer to error codes for reason	

Example

$EBOOT:DFLT<CRLF>

Copyright 2024 KAGA FEI Co., Ltd.

Downloaded from Arrow.com.

8.2 Advertising Start (ADVS)

Description

Advertising has started.

Parameters

None

Example

$EADVS<CRLF>

8.3 Advertising Timeout (ADVT)

Description

Advertising has stopped after reaching the configured timeout.

Parameters

None

Example

$EADVT<CRLF>

8.4 Scan Start (SCNS)

Description

Scanning has started.

Parameters

None

Example

$ESCNS<CRLF>

Copyright 2024 KAGA FEI Co., Ltd.

Downloaded from Arrow.com.

8.5 Scan Timeout (SCNT)

Description

Scanning has stopped after reaching the configured timeout.

Parameters

None

Example

$ESCNT<CRLF>

8.6 Advertising Report (ADVR)

Description

An advertising device that passed the filter was discovered during scanning. This event will only occur once per device per scan. The number of unique devices that generate this event is limited (currently 30 per scan).

Parameters

Parameter Name	Value	Comments
Address	Bluetooth low energy address of the advertiser	
RSSI	Signal strength	
PHY1	The primary PHY used by the advertiser	1Mbps, Coded
PHY2	The secondary PHY used by the advertiser	1Mbps, 2Mbps, Coded NA if the advertiser is not using extended features

Example

$EADVR: CB19F3AA2C17:-28:1Mbps:Coded<CRLF>

Copyright 2024 KAGA FEI Co., Ltd.

Downloaded from Arrow.com.

8.7 Advertising Report with Data (ADVD)

Description

Advertising report information was received from a nearby device during scanning. Data output is enabled.

Parameters

Parameter Name	Value	Comments
Address	Bluetooth low energy address of the advertiser	
RSSI	Signal strength	[-127～0]
PHY1	The primary PHY used by the advertiser	1Mbps, Coded
PHY2	The secondary PHY used by the advertiser	1Mbps, 2Mbps, Coded NA if the advertiser is not using extended features
Data	ascii-format hex	

Example

$EADVD:6CB1C246E415:-42:1Mbps:NA:02011A020A070BFF4C001006261AC6C1F1BE<CRLF>

Copyright 2024 KAGA FEI Co., Ltd.

Downloaded from Arrow.com.

8.8 Connection Requested (CONS)

Description

Scanning has started for the purpose of connection.

Parameters

None

Example

$ECONS<CRLF>

8.9 Connection Established (CONN)

Description

A connection was established. The parameter displays the address of the remote device.

Parameters

Parameter Name	Value	Comments
Address		

Example

$ECONN:CB19F3AA2C17<CRLF>

Copyright 2024 KAGA FEI Co., Ltd.

Downloaded from Arrow.com.

8.10 Disconnection (DCON)

Description

The current connection was terminated. The parameter lists the reason code for the disconnection.

Parameters

Parameter Name	Value	Comments
Reason Code	refer to Bluetooth HCI status codes	

Example

$EDCON:19<CRLF>

8.11 Flash Operation Status (SAVE)

Description

A save operation has ended. The status parameter tells the result of the operation.

Parameters

Parameter Name	Value	Comments
Status	OK -> Flash operation completed successfully ERR -> Flash operation experienced an error. The user should retry the operation	

Example

$ESAVE:OK<CRLF>

Copyright 2024 KAGA FEI Co., Ltd.

Downloaded from Arrow.com.

8.12 Service Discovery (SDSC)

Description

Service discovery completed on the remote peripheral. The status parameter tells the result of the operation.

Parameters

Parameter Name	Value	Comments
Status	OK -> The Original service and characteristics were discovered on the device NG -> The remote device is not compatible. The Original service/characteristics were not found	

Example

$ESDSC:OK<CRLF>

Copyright 2024 KAGA FEI Co., Ltd.

Downloaded from Arrow.com.

8.13 Connection Mode (MODE)

Description

Generated under two conditions.

1. Notifications on the connected peripheral's characteristic 0003 are enabled/disabled
2. The mode select IO pin is toggled (only while notifications are enabled)

Refer to the Fictional Specification for information on the modes.

Parameters

Parameter Name	Value	Comments
Mode	T -> Through Mode (Default) C -> Command Mode	

Example

$EMODE:T<CRLF>

8.14 Pairing (PAIR)

Description

Pairing status.

Parameters

Parameter Name	Value	Comments
Status	OK FAIL	

Example

$EPAIR:FAIL<CRLF>

Copyright 2024 KAGA FEI Co., Ltd.

Downloaded from Arrow.com.

8.15 Bonding (BOND)

Description

Bonding was successfully completed. The identity address of the remote device is displayed.

Parameters

Parameter Name	Value	Comments
Mac	ascii-formatted hex 12 characters	

Example

$EBOND: EE87EA3E4160<CRLF>

8.16 All Bonds Deleted (DBND)

Description

Generated when flash operation is complete.

Parameters

Parameter Name	Value	Comments
Status	OK, Error	

Example

$EDBND:OK<CRLF>

Copyright 2024 KAGA FEI Co., Ltd.

Downloaded from Arrow.com.

8.17 Individual Bonds Deleted (RBND)

Description

Generated when flash operation for specific address is complete.

Parameters

Parameter Name	Value	Comments
Status	OK, Error	

Example

$ERBND:ERR<CRLF>

8.18 Display PassKey (PSKD)

Description

Generated during pairing. The passkey is required to be displayed to the user. This passkey will need to be entered on the remote device to complete pairing.

Parameters

Parameter Name	Value	Comments
passkey	6 digits	

Example

$EPSKD: 010203<CRLF>

Copyright 2024 KAGA FEI Co., Ltd.

Downloaded from Arrow.com.

8.19 Confirm PassKey (PSKC)

Description

Generated during pairing. The passkey is required to be displayed to the user. The user is required to input confirmation that the passkey matches the passkey displayed on the remote device. See the PSKC API function.

Parameters

Parameter Name	Value	Comments
passkey	6 digits	

Example

$ PSKC:010203<CRLF>

8.20 Input PassKey (PSKI)

Description

Generated during pairing. The user is required to input a 6 digit passkey using the PSKI API function. The remote device is responsible for displaying the passkey required for input.

Parameters

None

Example

$EPSKI<CRLF>

Copyright 2024 KAGA FEI Co., Ltd.

Downloaded from Arrow.com.

8.21 Out-of-band Key Exchange (OOBD)

Description

Generated during pairing. The key-pair must be provided to the remote device through an external means of communication. The corresponding key-pair from the remote device must be input using the OOBD API function.

Parameters

Parameter Name	Value	Comments
Value	32 ascii-format hex characters	
Confirm Value	32 ascii-format hex characters	

Example

$EOOBD:1321A54F896BBC3E84C4ABB3D9C368EF:CF3AB24856EC32BA47E5B6C98799DADB
<CRLF>

Copyright 2024 KAGA FEI Co., Ltd.

Downloaded from Arrow.com.

8.22 Data Transmit Complete (BTTX)

Description

Generated when data is sent when the device is in command mode.

Parameters

None

Example

$EBTTX<CRLF>

8.23 Data Received (BTRX)

Description

Generated when data is received when the device is in command mode.

Parameters

Parameter Name	Value	Comments
Length	0-20	
Data	characters	

Example

$EBTRX:6:Kfsa-B<CRLF>

Copyright 2024 KAGA FEI Co., Ltd.

Downloaded from Arrow.com.

8.24 Low Power Mode Enabled (PWRL)

Description

Generated when the module enters power-save mode. While this mode is active, the UART interface will be unable to receive data. Data may still be transmitted from the module (events, reception of data).

Parameters

NA

Example

$EPWRL<CRLF>

8.25 Low Power Mode Disabled (PWRH)

Description

Generated when the module exits power-save mode. Full UART transmission and reception will be available.

Parameters

NA

Example

$ EPWRH <CRLF>

Copyright 2024 KAGA FEI Co., Ltd.

Downloaded from Arrow.com.

8.26 Deep Sleep Mode Enable (SHDN)

Description

Notifies you when you enter Deep Sleep Mode.

I / F communication is not possible.

Parameters

NA

Example

$ESHDN<CRLF>

Copyright 2024 KAGA FEI Co., Ltd.

Downloaded from Arrow.com.

9. Error Codes

The table below lists the error codes that may be produced during use of the EJ2840MA2 application firmware.

Code	Error	Description
ERR101	PARAM_COUNT	Incorrect number of input parameters supplied to an API command
ERR102	PARAM_VALUE	An invalid value was supplied to an API function
ERR103	PARAM_LENGTH	The length of an input argument is invalid
ERR104	INVALID_STATE	The device is in an invalid state for the requested operation - Attempting to modify a configuration setting while the device is advertising/scanning/connected - Attempting to send data while notifications are not enabled or no Bluetooth low energy connection is established - Attempting to scan/connect while the device is set to peripheral mode, or advertise from central mode
ERR105	UNKNOWN_COMMAND	An invalid function code was supplied
ERR107	INTERNAL	A software error occurred
ERR108	SECURITY_LEVEL	The device is busy performing another operation - Attempting to set a security level (3+) that requires MITM without setting appropriate IO capabilities - Attempting to set IO capabilities to NONE while the security level requires MITM (3+)
ERR109	BUSY	The device is busy performing another operation - SEND commands while Bluetooth low energy transmit buffers are full - Configuring or starting ADC operations while one is in progress - Performing a flash based operation (SAVE) while another is in progress
ERR110	NOT_SUPPORTED	The API function is not available on this board. Example includes writing to SD card when using EJ2840MA2 model as SPI features are not available.
ERR111	INVALID_CONFIGURATION	A feature was attempted to be enabled with invalid parameters configured. (e.g. filter configurations)

Copyright 2024 KAGA FEI Co., Ltd.

Downloaded from Arrow.com.

Precautions

■ Please conduct validation and verification of our products in actual condition of mounting and operating environment before using our products.

■ The products listed in this Specification are intended for use in general electronic equipment (e.g., AV equipment, OA equipment, home electric appliances, office equipment, information and communication equipment including, without limitation, mobile phone, and PC). Please be sure to contact KAGA FEI for further information before using the products for any equipment which may directly cause loss of human life or bodily injury (e.g., transportation equipment including, without limitation, automotive powertrain control system, train control system, and ship control system, traffic signal equipment, disaster prevention equipment, medical equipment classified as Class I, II or III by IMDRF, highly public information network equipment including, without limitation, telephone exchange, and base station).
Please do not incorporate our products into any equipment requiring high levels of safety and/or reliability (e.g., aerospace equipment, aviation equipment, medical equipment classified as Class IV by IMDRF, nuclear control equipment, undersea equipment, military equipment).
When our products are used even for high safety and/or reliability-required devices or circuits of general electronic equipment, it is strongly recommended to perform a thorough safety evaluation prior to use of our products and to install a protection circuit as necessary.
Please note that unless you obtain prior written consent of KAGA FEI, KAGA FEI shall not be in any way responsible for any damages incurred by you or third parties arising from use of the products listed in this Specification for any equipment requiring inquiry to KAGA FEI or prohibited for use by KAGA FEI as described above.

■ Information contained in this Specification is intended to convey examples of typical performances and/or applications of our products and is not intended to make any warranty with respect to the intellectual property rights or any other related rights of KAGA FEI or any third parties nor grant any license under such rights.

■ Please note that the scope of warranty for our products is limited to the delivered our products themselves and KAGA FEI shall not be in any way responsible for any damages resulting from a fault or defect in our products.

■ The contents of this Specification are applicable to our products which are purchased from our sales offices or authorized distributors (hereinafter “KAGA FEI’s official sales channel”). Please note that the contents of this specification are not applicable to our products purchased from any seller other than KAGA FEI’s official sales channel.

■ The contents of this Specification are applied in preference to any agreement between you and KAGA FEI or KAGA FEI's official sales channel (e.g., supply and purchase agreement, quality assurance agreement).

■ You will have deemed accepted the contents of this Specification upon usage of our products.

■ Caution for Export
Some of our products listed in this specification may require specific procedures for export according to "U.S. Export Administration Regulations" and other applicable regulations.

Copyright 2024 KAGA FEI Co., Ltd.

Downloaded from Arrow.com.