Dual Up Counters
MC14518B, MC14520B

The MC14518B dual BCD counter and the MC14520B dual binary counter are constructed with MOS P-channel and N-channel enhancement mode devices in a single monolithic structure. Each consists of two identical, independent, internally synchronous 4-stage counters. The counter stages are type D flip-flops, with interchangeable Clock and Enable lines for incrementing on either the positive-going or negative-going transition as required when cascading multiple stages. Each counter can be cleared by applying a high level on the Reset line. In addition, the MC14518B will count out of all undefined states within two clock periods. These complementary MOS up counters find primary use in multi-stage synchronous or ripple counting applications requiring low power dissipation and/or high noise immunity.

Features

- Diode Protection on All Inputs
- Supply Voltage Range = 3.0 Vdc to 18 Vdc
- Internally Synchronous for High Internal and External Speeds
- Logic Edge-Clocked Design − Incremented on Positive Transition of Clock or Negative Transition on Enable
- Capable of Driving Two Low-power TTL Loads or One Low-power Schottky TTL Load Over the Rated Temperature Range
- NLV Prefix for Automotive and Other Applications Requiring Unique Site and Control Change Requirements; AEC-Q100 Qualified and PPAP Capable
- This Device is Pb-Free and is RoHS Compliant

MAXIMUM RATINGS (Voltages Referenced to V_{SS}) (Note 1)

Symbol	Parameter	Value	Unit
V_{DD}	DC Supply Voltage Range	−0.5 to +18.0	V
V_{in}, V_{out}	Input or Output Voltage Range (DC or Transient)	−0.5 to V_{DD} + 0.5	V
I_{in}, I_{out}	Input or Output Current (DC or Transient) per Pin	±10	mA
P_D	Power Dissipation, per Package (Note 2)	500	mW
T_A	Operating Temperature Range	−55 to +125	°C
T_{stg}	Storage Temperature Range	−65 to +150	°C
T_L	Lead Temperature (8-Second Soldering)	260	°C

Stresses exceeding those listed in the Maximum Ratings table may damage the device. If any of these limits are exceeded, device functionality should not be assumed, damage may occur and reliability may be affected. Operating the device outside its recommended conditions, but still within its maximum rated limits may not cause immediate damage. However, doing so can lead to reduced performance, unpredictable behavior, and potentially shorten the device's lifespan or reliability.

1. Maximum Ratings are those values beyond which damage to the device may occur.
2. Temperature Derating: "D/DW" Package: –7.0 mW/°C From 65 °C To 125 °C

This device contains protection circuitry to guard against damage due to high static voltages or electric fields. However, precautions must be taken to avoid applications of any voltage higher than maximum rated voltages to this high-impedance circuit. For proper operation, V_{in} and V_{out} should be constrained to the range $V_{SS} \le (V_{in}$ or $V_{out}) \le V_{DD}$.

Unused inputs must always be tied to an appropriate logic voltage level (e.g., either V_{SS} or V_{DD}). Unused outputs must be left open.

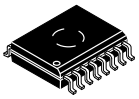

SOIC-16 WB
DW SUFFIX
CASE 751G

PIN ASSIGNMENT

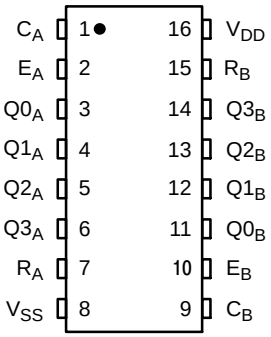

MARKING DIAGRAM

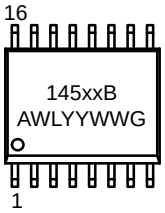

xx	= 18 or 20
A	= Assembly Location
WL, L	= Wafer Lot
YY, Y	= Year
WW, W	= Work Week
G	= Pb-Free Indicator

ORDERING INFORMATION

See detailed ordering and shipping information in the package dimensions section on page 2 of this data sheet.

NOTE: Some of the devices on this data sheet have been **DISCONTINUED**. Please refer to the table on page 2.

© Semiconductor Components Industries, LLC, 2014

Downloaded from Arrow.com.

BLOCK DIAGRAM

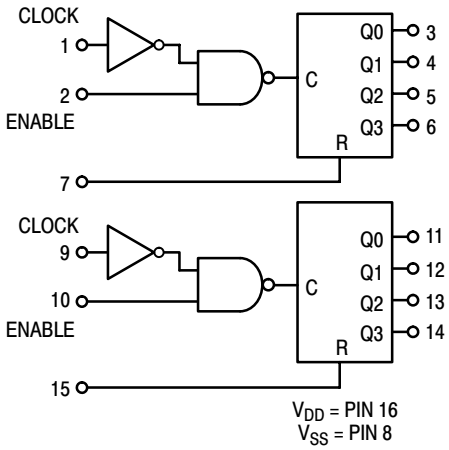

TRUTH TABLE

Clock	Enable	Reset	Action
↗	1	0	Increment Counter
0	↘	0	Increment Counter
↘	X	0	No Change
X	↗	0	No Change
↗	0	0	No Change
1	↘	0	No Change
X	X	1	Q0 thru Q3 = 0

X = Don't Care

ORDERING INFORMATION

Device	Package	Shipping†
MC14518BDWG	SOIC-16 WB (Pb-Free)	47 Units / Rail
MC14518BDWR2G	SOIC-16 WB (Pb-Free)	1000 Units / Tape & Reel
NLV14518BDWR2G*	SOIC-16 WB (Pb-Free)	1000 Units / Tape & Reel
MC14520BDWR2G	SOIC-16 WB (Pb-Free)	1000 Units / Tape & Reel

DISCONTINUED (Note 3)

MC14520BDWG	SOIC-16 WB (Pb-Free)	47 Units / Rail

† For information on tape and reel specifications, including part orientation and tape sizes, please refer to our Tape and Reel Packaging Specifications Brochure, BRD8011/D.

* NLV Prefix for Automotive and Other Applications Requiring Unique Site and Control Change Requirements; AEC-Q100 Qualified and PPAP Capable.

3. **DISCONTINUED:** These devices are not recommended for new design. Please contact your **onsemi** representative for information. The most current information on these devices may be available on www.onsemi.com.

Share Feedback
Your Opinion Matters

Downloaded from Arrow.com.

ELECTRICAL CHARACTERISTICS (Voltages Referenced to V_{SS})

Characteristic	Symbol	V_{DD} Vdc	−55 °C Min	−55 °C Max	25 °C Min	25 °C Typ (Note 4)	25 °C Max	125 °C Min	125 °C Max	Unit
Output Voltage “0” Level V_{in} = V_{DD} or 0	V_{OL}	5.0 10 15	– – –	0.05 0.05 0.05	– – –	0 0 0	0.05 0.05 0.05	– – –	0.05 0.05 0.05	Vdc
“1” Level V_{in} = 0 or V_{DD}	V_{OH}	5.0 10 15	4.95 9.95 14.95	– – –	4.95 9.95 14.95	5.0 10 15	– – –	4.95 9.95 14.95	– – –	Vdc
Input Voltage “0” Level (V_O = 4.5 or 0.5 Vdc) (V_O = 9.0 or 1.0 Vdc) (V_O = 13.5 or 1.5 Vdc)	V_{IL}	 5.0 10 15	 – – –	 1.5 3.0 4.0	 – – –	 2.25 4.50 6.75	 1.5 3.0 4.0	 – – –	 1.5 3.0 4.0	Vdc
“1” Level (V_O = 0.5 or 4.5 Vdc) (V_O = 1.0 or 9.0 Vdc) (V_O = 1.5 or 13.5 Vdc)	V_{IH}	 5.0 10 15	 3.5 7.0 11	 – – –	 3.5 7.0 11	 2.75 5.50 8.25	 – – –	 3.5 7.0 11	 – – –	Vdc
Output Drive Current (V_{OH} = 2.5 Vdc) Source (V_{OH} = 4.6 Vdc) (V_{OH} = 9.5 Vdc) (V_{OH} = 13.5 Vdc)	I_{OH}	 5.0 5.0 10 15	 –3.0 –0.64 –1.6 –4.2	 – – – –	 –2.4 –0.51 –1.3 –3.4	 –4.2 –0.88 –2.25 –8.8	 – – – –	 –1.7 –0.36 –0.9 –2.4	 – – – –	mAdc
(V_{OL} = 0.4 Vdc) Sink (V_{OL} = 0.5 Vdc) (V_{OL} = 1.5 Vdc)	I_{OL}	5.0 10 15	0.64 1.6 4.2	– – –	0.51 1.3 3.4	0.88 2.25 8.8	– – –	0.36 0.9 2.4	– – –	mAdc
Input Current	I_{in}	15	–	±0.1	–	±0.00001	±0.1	–	±1.0	μAdc
Input Capacitance (V_{in} = 0)	C_{in}	–	–	–	–	5.0	7.5	–	–	pF
Quiescent Current (Per Package)	I_{DD}	5.0 10 15	– – –	5.0 10 20	– – –	0.005 0.010 0.015	5.0 10 20	– – –	150 300 600	μAdc
Total Supply Current (Notes 5, 6) (Dynamic plus Quiescent, Per Package) (C_L = 50 pF on all outputs, all buffers switching)	I_T	5.0 10 15	I_T = (0.6 μA/kHz) f + I_{DD} I_T = (1.2 μA/kHz) f + I_{DD} I_T = (1.7 μA/kHz) f + I_{DD}							μAdc

Product parametric performance is indicated in the Electrical Characteristics for the listed test conditions, unless otherwise noted. Product performance may not be indicated by the Electrical Characteristics if operated under different conditions.

4. Data labelled “Typ” is not to be used for design purposes but is intended as an indication of the IC’s potential performance.
5. The formulas given are for the typical characteristics only at 25 °C.
6. To calculate total supply current at loads other than 50 pF:

$$I_T(C_L) = I_T(50\ pF) + (C_L - 50)\ Vfk$$

where: I_T is in μA (per package), C_L in pF, V = (V_{DD} – V_{SS}) in volts, f in kHz is input frequency, and k = 0.002.

Share Feedback
Your Opinion Matters

Downloaded from Arrow.com.

SWITCHING CHARACTERISTICS (Note 7) (C_L = 50 pF, T_A = 25 °C)

Characteristic	Symbol	V_{DD}	All Types			Unit
			Min	Typ (Note 8)	Max	
Output Rise and Fall Time	t_{TLH}, t_{THL}					ns
t_{TLH}, t_{THL} = (1.5 ns/pF) C_L + 25 ns		5.0	–	100	200	
t_{TLH}, t_{THL} = (0.75 ns/pF) C_L + 12.5 ns		10	–	50	100	
t_{TLH}, t_{THL} = (0.55 ns/pF) C_L + 9.5 ns		15	–	40	80	
Propagation Delay Time	t_{PLH}, t_{PHL}					ns
Clock to Q/Enable to Q						
t_{PLH}, t_{PHL} = (1.7 ns/pF) C_L + 215 ns		5.0	–	280	560	
t_{PLH}, t_{PHL} = (0.66 ns/pF) C_L + 97 ns		10	–	115	230	
t_{PLH}, t_{PHL} = (0.5 ns/pF) C_L + 75 ns		15	–	80	160	
Reset to Q	t_{PHL}					ns
t_{PHL} = (1.7 ns/pF) C_L + 265 ns		5.0	–	330	650	
t_{PHL} = (0.66 ns/pF) C_L + 117 ns		10	–	130	230	
t_{PHL} = (0.66 ns/pF) C_L + 95 ns		15	–	90	170	
Clock Pulse Width	$t_{w(H)}$	5.0	200	100	–	ns
	$t_{w(L)}$	10	100	50	–	
		15	70	35	–	
Clock Pulse Frequency	f_{cl}	5.0	–	2.5	1.5	MHz
		10	–	6.0	3.0	
		15	–	8.0	4.0	
Clock or Enable Rise and Fall Time	t_{THL}, t_{TLH}	5.0	–	–	15	μs
		10	–	–	5	
		15	–	–	4	
Enable Pulse Width	$t_{WH(E)}$	5.0	440	220	–	ns
		10	200	100	–	
		15	140	70	–	
Reset Pulse Width	$t_{WH(R)}$	5.0	280	125	–	ns
		10	120	55	–	
		15	90	40	–	
Reset Removal Time	t_{rem}	5.0	– 5	– 45	–	ns
		10	15	– 15	–	
		15	20	– 5	–	

7. The formulas given are for the typical characteristics only at 25 °C.
8. Data labelled “Typ” is not to be used for design purposes but is intended as an indication of the IC’s potential performance.

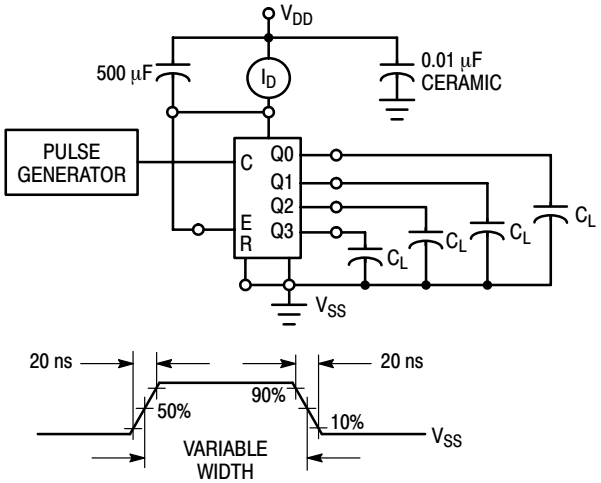

Figure 1. Power Dissipation Test Circuit and Waveform

Share Feedback
Your Opinion Matters

Downloaded from Arrow.com.

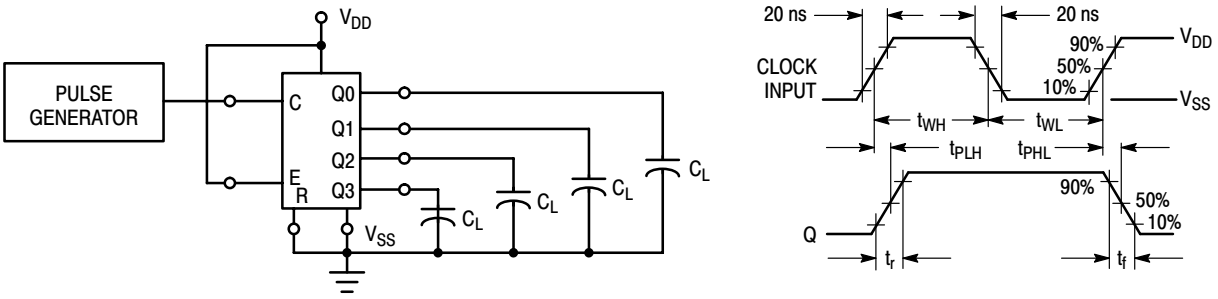

Figure 2. Switching Time Test Circuit and Waveforms

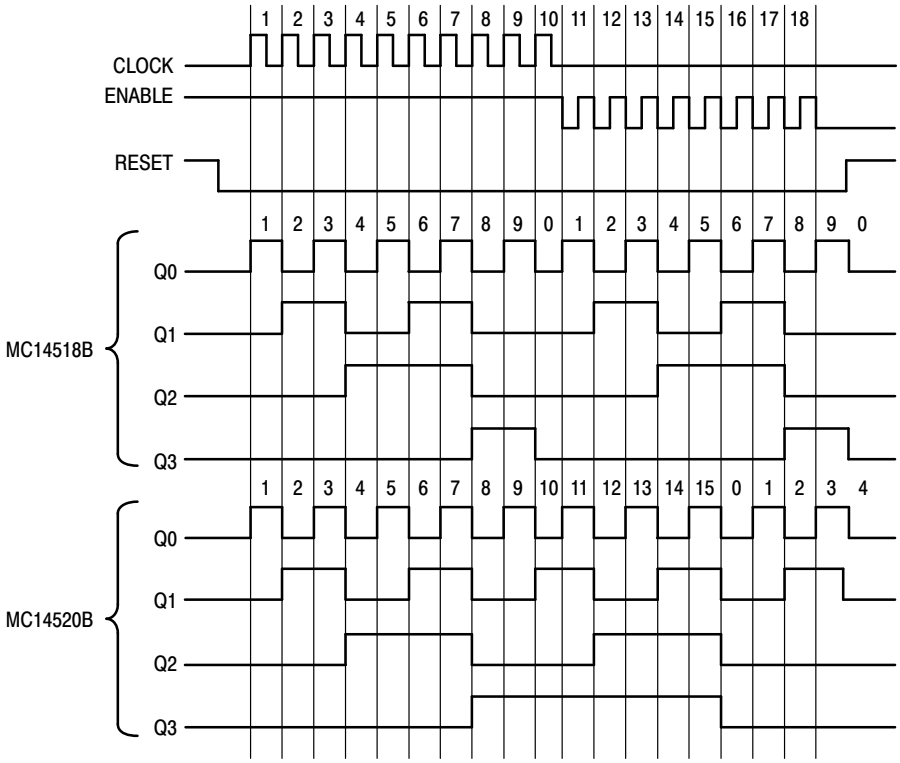

Figure 3. Timing Diagram

Share Feedback
Your Opinion Matters

Downloaded from Arrow.com.

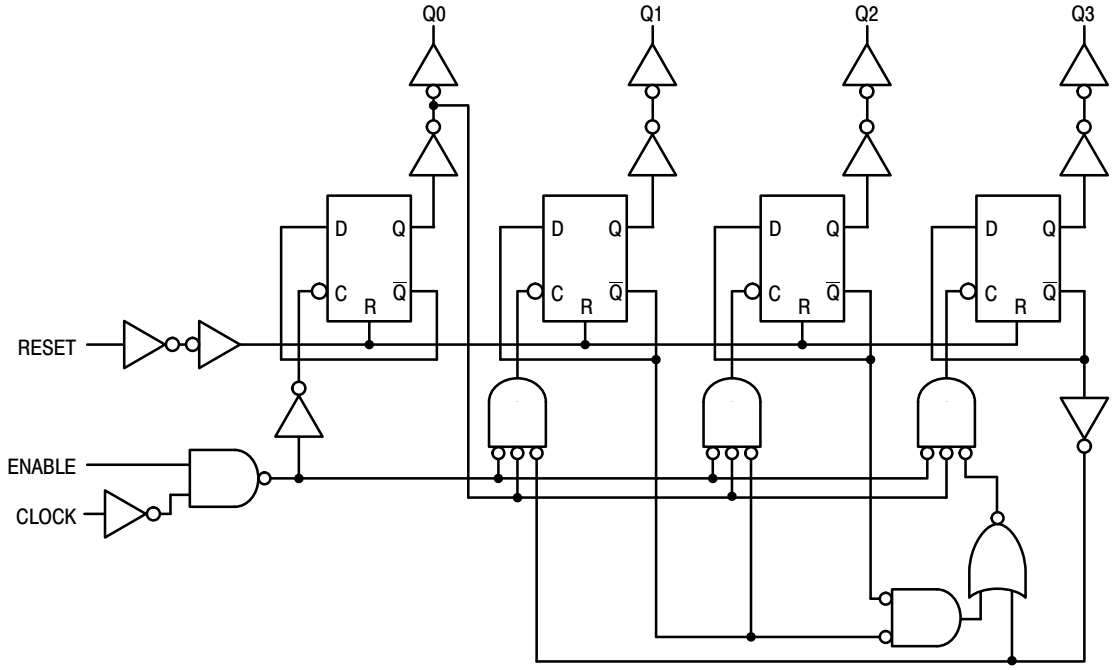

Figure 4. Decade Counter (MC14518B) Logic Diagram
(1/2 of Device Shown)

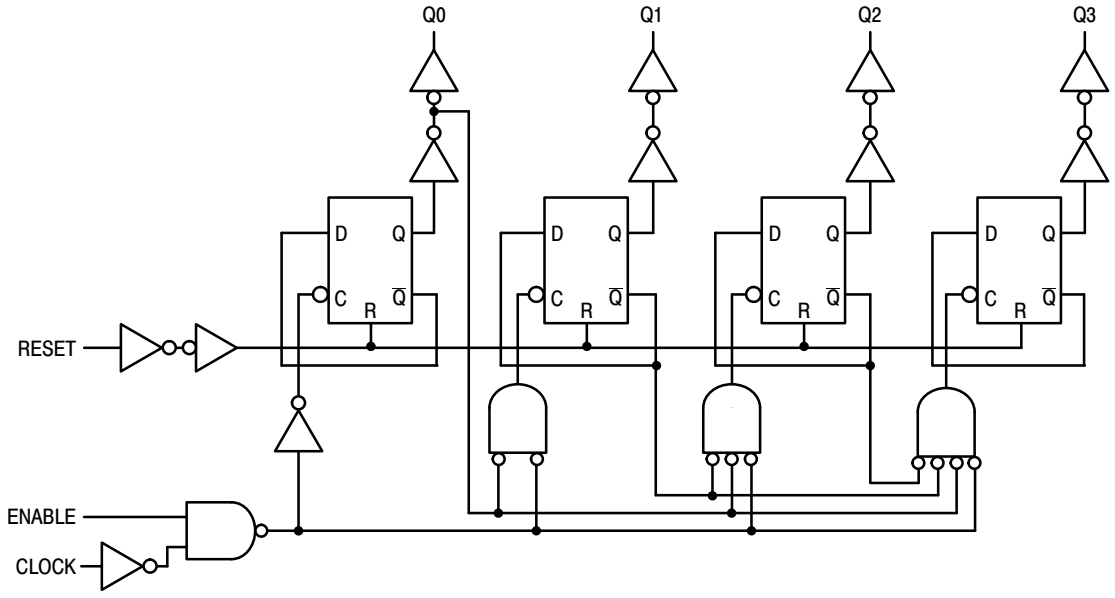

Figure 5. Binary Counter (MC14520B) Logic Diagram
(1/2 of Device Shown)

Share Feedback
Your Opinion Matters

Downloaded from Arrow.com.

REVISION HISTORY

Revision	Description of Changes	Date
9	Rebranded the Data Sheet to **onsemi** format. MC14520BDWG OPN marked as Discontinued.	10/3/2025

This document has undergone updates prior to the inclusion of this revision history table. The changes tracked here only reflect updates made on the noted approval dates.

Share Feedback
Your Opinion Matters

Downloaded from Arrow.com.

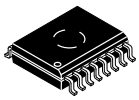

1

SCALE 1:1

SOIC−16 WB
CASE 751G
ISSUE E

DATE 08 OCT 2021

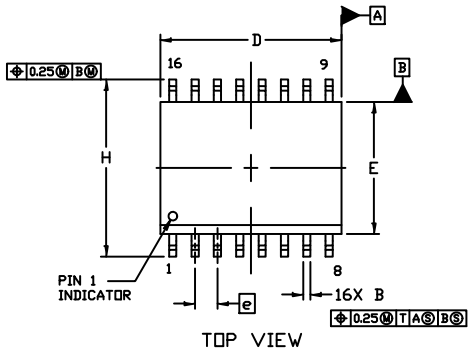

TOP VIEW

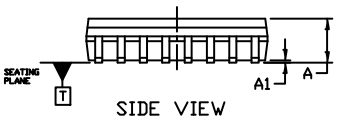

SIDE VIEW

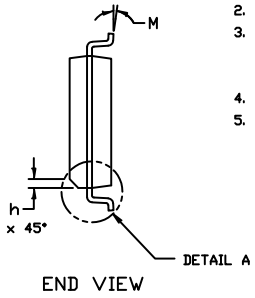

END VIEW

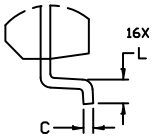

DETAIL A
2X SCALE

NOTES:
1. DIMENSIONING AND TOLERANCING PER ASME Y14.5M, 1994.
2. CONTROLLING DIMENSION: MILLIMETERS
3. DIMENSION b DOES NOT INCLUDE DAMBAR PROTRUSION. ALLOWABLE PROTRUSION SHALL BE 0.13 TOTAL IN EXCESS OF B DIMENSION AT MAXIMUM MATERIAL CONDITION.
4. DIMENSIONS D AND E DO NOT INCLUDE MOLD PROTRUSIONS.
5. MAXIMUM MOLD PROTRUSION OR FLASH TO BE 0.15 PER SIDE.

	MILLIMETERS	
DIM	MIN.	MAX.
A	2.35	2.65
A1	0.10	0.25
B	0.35	0.49
C	0.23	0.32
D	10.15	10.45
E	7.40	7.60
e	1.27 BSC	
H	10.05	10.55
h	0.53 REF	
L	0.50	0.90
M	0°	7°

GENERIC MARKING DIAGRAM*

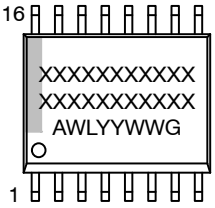

XXXXX = Specific Device Code
A = Assembly Location
WL = Wafer Lot
YY = Year
WW = Work Week
G = Pb−Free Package

*This information is generic. Please refer to device data sheet for actual part marking. Pb−Free indicator, “G” or microdot “▪”, may or may not be present. Some products may not follow the Generic Marking.

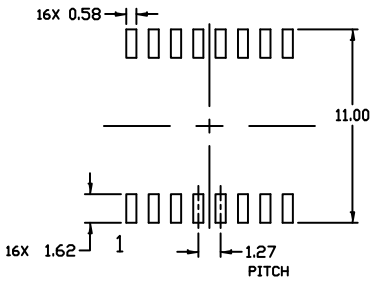

RECOMMENDED
MOUNTING FOOTPRINT

DOCUMENT NUMBER:	**98ASB42567B**	Electronic versions are uncontrolled except when accessed directly from the Document Repository. Printed versions are uncontrolled except when stamped “CONTROLLED COPY” in red.	
DESCRIPTION:	**SOIC−16 WB**		**PAGE 1 OF 1**

onsemi and ONSEMI are trademarks of Semiconductor Components Industries, LLC dba **onsemi** or its subsidiaries in the United States and/or other countries. **onsemi** reserves the right to make changes without further notice to any products herein. **onsemi** makes no warranty, representation or guarantee regarding the suitability of its products for any particular purpose, nor does **onsemi** assume any liability arising out of the application or use of any product or circuit, and specifically disclaims any and all liability, including without limitation special, consequential or incidental damages. **onsemi** does not convey any license under its patent rights nor the rights of others.

Downloaded from Arrow.com.

onsemi, ONSEMI , and other names, marks, and brands are registered and/or common law trademarks of Semiconductor Components Industries, LLC dba "**onsemi**" or its affiliates and/or subsidiaries in the United States and/or other countries. **onsemi** owns the rights to a number of patents, trademarks, copyrights, trade secrets, and other intellectual property. A listing of **onsemi**'s product/patent coverage may be accessed at www.onsemi.com/site/pdf/Patent−Marking.pdf. **onsemi** reserves the right to make changes at any time to any products or information herein, without notice. The information herein is provided "as−is" and **onsemi** makes no warranty, representation or guarantee regarding the accuracy of the information, product features, availability, functionality, or suitability of its products for any particular purpose, nor does **onsemi** assume any liability arising out of the application or use of any product or circuit, and specifically disclaims any and all liability, including without limitation special, consequential or incidental damages. Buyer is responsible for its products and applications using **onsemi** products, including compliance with all laws, regulations and safety requirements or standards, regardless of any support or applications information provided by **onsemi**. "Typical" parameters which may be provided in **onsemi** data sheets and/or specifications can and do vary in different applications and actual performance may vary over time. All operating parameters, including "Typicals" must be validated for each customer application by customer's technical experts. **onsemi** does not convey any license under any of its intellectual property rights nor the rights of others. **onsemi** products are not designed, intended, or authorized for use as a critical component in life support systems or any FDA Class 3 medical devices or medical devices with a same or similar classification in a foreign jurisdiction or any devices intended for implantation in the human body. Should Buyer purchase or use **onsemi** products for any such unintended or unauthorized application, Buyer shall indemnify and hold **onsemi** and its officers, employees, subsidiaries, affiliates, and distributors harmless against all claims, costs, damages, and expenses, and reasonable attorney fees arising out of, directly or indirectly, any claim of personal injury or death associated with such unintended or unauthorized use, even if such claim alleges that **onsemi** was negligent regarding the design or manufacture of the part. **onsemi** is an Equal Opportunity/Affirmative Action Employer. This literature is subject to all applicable copyright laws and is not for resale in any manner.

ADDITIONAL INFORMATION

TECHNICAL PUBLICATIONS:
Technical Library: www.onsemi.com/design/resources/technical−documentation
onsemi Website: www.onsemi.com

ONLINE SUPPORT: www.onsemi.com/support
For additional information, please contact your local Sales Representative at www.onsemi.com/support/sales

◊

Downloaded from Arrow.com.