Data sheet

SL 2.50/04/90G 3.2SN BK BX

Weidmüller Interface GmbH & Co. KG
Klingenbergstraße 26
D-32758 Detmold
Germany

www.weidmueller.com

Product image



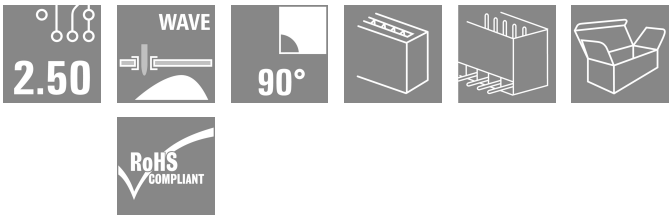

Similar to illustration

Male header for wave soldering in 2.50 mm pitch.

- Plugging direction is parallel (90°) to the PCB
- Housing variant: Closed (G)
- Packaged in a cardboard box (BX)

General ordering data

Version	PCB plug-in connector, male header, THT solder connection, Pitch in mm (P): 2.50 mm, Number of poles: 4, 90°, Box
Order No.	2439770000
Type	SL 2.50/04/90G 3.2SN BK BX
GTIN (EAN)	4050118454949
Qty.	250 items
Product data	IEC: 320 V / 6 A UL: 150 V / 5 A
Packaging	Box

Downloaded from Arrow.com.

Data sheet

SL 2.50/04/90G 3.2SN BK BX

Weidmüller Interface GmbH & Co. KG
Klingenbergstraße 26
D-32758 Detmold
Germany

www.weidmueller.com

Technical data

Approvals

Approvals	
ROHS	Conform
UL File Number Search	UL Website
Certificate No. (cURus)	E60693

Dimensions and weights

Depth	10.1 mm	Depth (inches)	0.3976 inch
Height	11.3 mm	Height (inches)	0.4449 inch
Height of lowest version	8.1 mm	Width	11.9 mm
Width (inches)	0.4685 inch	Net weight	0.85 g

Environmental Product Compliance

RoHS Compliance Status	Compliant without exemption
REACH SVHC	No SVHC above 0.1 wt%

System specifications

Product family	OMNIMATE Signal - series BL/SL 2.50	Type of connection	Board connection
Mounting onto the PCB	THT solder connection	Pitch in mm (P)	2.50 mm
Pitch in inches (P)	0.098 "	Outgoing elbow	90°
Number of poles	4	Number of solder pins per pole	1
Solder pin length (l)	3.2 mm	Solder pin length tolerance	+0.1 / -0.1 mm
Solder pin dimensions	0.8 x 0.8 mm	Solder pin dimensions = d tolerance	+0,02 / -0,02 mm
Solder eyelet hole diameter (D)	1.3 mm	Solder eyelet hole diameter tolerance (D)	+ 0,1 mm
L1 in mm	7.50 mm	L1 in inches	2.952 "
Number of rows	1	Pin series quantity	1
Touch-safe protection acc. to DIN VDE 57 106	finger-safe unplugged/ back-of-hand-safe plugged	Touch-safe protection acc. to DIN VDE 0470	IP20 plugged/ IP10 unplugged
Plugging cycles	25		

Material data

Insulating material	PA 66	Colour	black
Colour chart (similar)	RAL 9011	Comparative Tracking Index (CTI)	≥ 600
Moisture Level (MSL)		UL 94 flammability rating	V-0
Contact material	Copper alloy	Contact surface	tinned
Tinning type	matt	Layer structure of solder connection	1...3 µm Ni / 4...6 µm Sn matt
Storage temperature, min.	-40 °C	Storage temperature, max.	70 °C
Operating temperature, min.	-40 °C	Operating temperature, max.	105 °C

Rated data acc. to IEC

tested acc. to standard	IEC 61984	Rated current, min. number of poles (Tu=20°C)	6 A
Rated current, min. number of poles (Tu=40°C)	6 A	Rated voltage for surge voltage class / pollution degree II/2	320 V
Rated voltage for surge voltage class / pollution degree III/2	320 V	Rated voltage for surge voltage class / pollution degree III/3	80 V
Rated impulse voltage for surge voltage class/ pollution degree II/2	2.5 kV	Rated impulse voltage for surge voltage class/ pollution degree III/2	2.5 kV

Downloaded from Arrow.com.

SL 2.50/04/90G 3.2SN BK BX

Weidmüller Interface GmbH & Co. KG
Klingenbergstraße 26
D-32758 Detmold
Germany

www.weidmueller.com

Technical data

Rated impulse voltage for surge voltage class/ contamination degree III/3	2.5 kV		

Rated data acc. to CSA

Rated voltage (Use group B / CSA)	150 V	Rated current (Use group B / CSA)	5 A

Rated data acc. to UL 1059

Institute (cURus)	CURUS	Certificate No. (cURus)	E60693
Rated voltage (Use group B / UL 1059)	150 V	Rated current (Use group B / UL 1059)	5 A
Reference to approval values	Specifications are maximum values, details - see approval certificate.		

Packing

Packaging	Box	VPE length	138.00 mm
VPE width	88.00 mm	VPE height	52.00 mm

Important note

IPC conformity	Conformity: The products are developed, manufactured and delivered according international recognized standards and norms and comply with the assured properties in the data sheet resp. fulfill decorative properties in accordance with IPC-A-610 "Class 2". Further claims on the products can be evaluated on request.
Notes	• Rated current related to rated cross-section & min. No. of poles. • P on drawing = pitch • Rated data refer only to the component itself. Clearance and creepage distances to other components are to be designed in accordance with the relevant application standards. • In accordance with IEC 61984, OMNIMATE-connectors are connectors without breaking capacity (COC). During designated use, connectors are not allowed to be engaged or disengaged when live or under load • Long term storage of the product with average temperature of 50 °C and maximum humidity 70%, 36 months

Classifications

ETIM 8.0	EC002637	ETIM 9.0	EC002637
ETIM 10.0	EC002637	ECLASS 14.0	27-46-02-01
ECLASS 15.0	27-46-02-01		

Downloaded from Arrow.com.

SL 2.50/04/90G 3.2SN BK BX

Weidmüller Interface GmbH & Co. KG
Klingenbergstraße 26
D-32758 Detmold
Germany

www.weidmueller.com

Drawings

Dimensional drawing

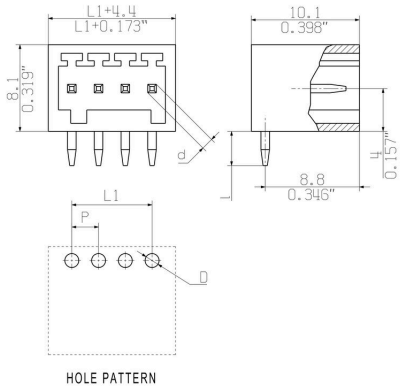

Downloaded from Arrow.com.

SL 2.50/04/90G 3.2SN BK BX

Weidmüller Interface GmbH & Co. KG
Klingenbergstraße 26
D-32758 Detmold
Germany

www.weidmueller.com

Drawings

Product benefits

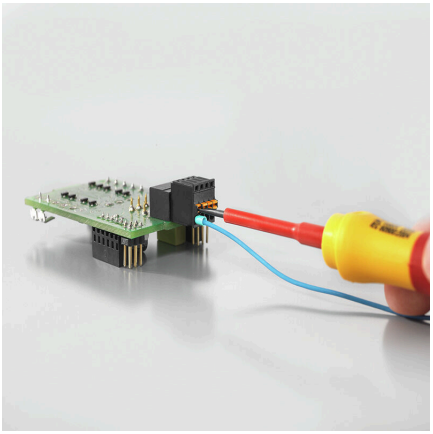

Operating safetyThrough PUSH IN connection system

Downloaded from Arrow.com.