Data Sheet | Item Number: 2204-1301

3-conductor through terminal block; with push-button; 4 mm²; with test port; suitable for Ex e II applications; side and center marking; for DIN-rail 35 x 15 and 35 x 7.5; Push-in CAGE CLAMP®; 4,00 mm²; gray

https://www.wago.com/2204-1301

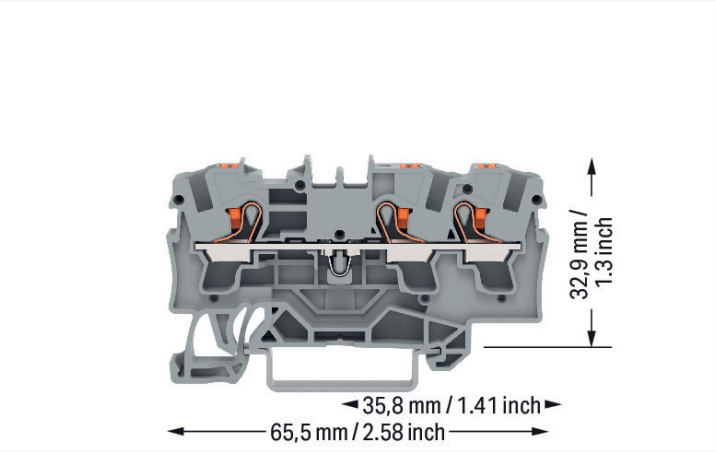

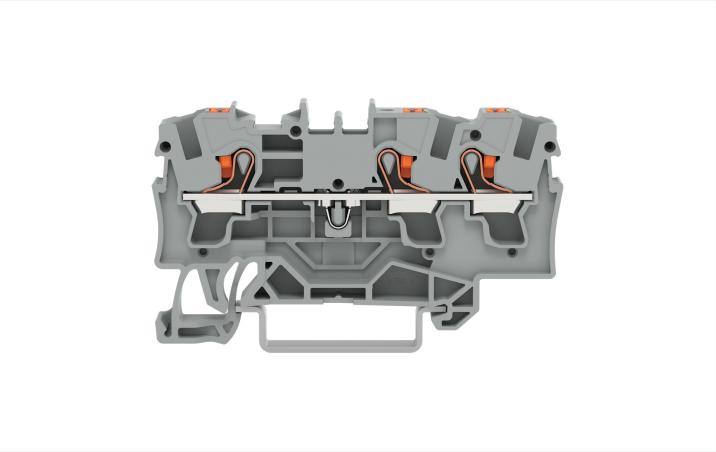

Color: gray

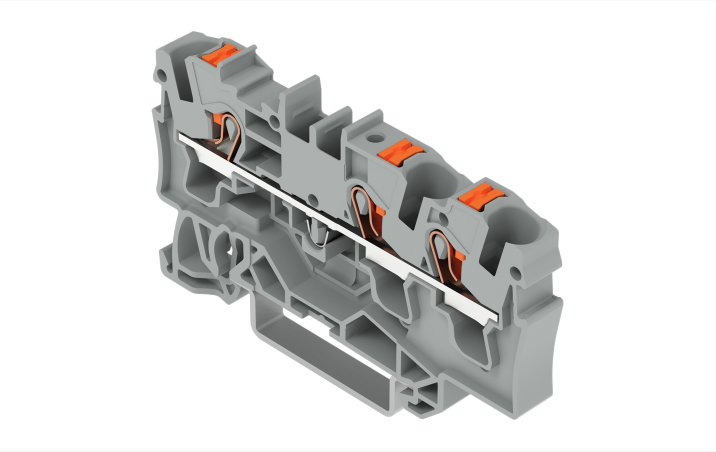

Similar to illustration

Through terminal block, 2204 Series, push-button

This through terminal block (item number 2204-1301) is designed for simple and secure connections. Ensure that the strip lengths are between 11 and 13 mm when connecting conductors to this through terminal block. Whether for industrial or building applications, you can use our through terminal blocks to connect electrical conductors quickly and safely. We offer variants for both classic through-wiring and potential distribution. This product features conductor terminals and utilizes Push-in CAGE CLAMP®. Push-in CAGE CLAMP® technology provides a universal connection solution for all conductor types. It allows both solid and fine-stranded conductors with ferrules to be inserted directly into the clamping point without the need for tools. The item's dimensions are (6.2 x 65.5 x 39.5) mm (width x height x depth). This through terminal block is suitable for conductor cross sections ranging from 0.5 mm² to 6 mm².

This through rail-mount terminal block is operated with a push-button. Our TOPJOB® S rail-mount terminal blocks offer more than just secure electrical connections in all kinds of industrial applications and modern building installations. They also offer the perfect actuation variant for every use: lever, push-button, or operating slot. This product is designed for specific Ex applications (please refer to the product datasheet).

Downloaded from Arrow.com.

Electrical data

Ratings per	IEC/EN 60947-7-1		
Overvoltage category	III	III	II
Pollution degree	3	2	2
Nominal voltage	800 V	-	-
Rated impulse withstand voltage	8 kV	-	-
Rated current	32 A	-	-
Current at conductor cross-section (max.) mm²	41 A	-	-

Approvals per	UL 1059		
Use group	B	C	D
Rated voltage	600 V	600 V	-
Rated current	30 A	30 A	-

Approvals per	CSA 22.2 No 158		
Use group	B	C	D
Rated voltage	600 V	600 V	-
Rated current	30 A	30 A	-

Ex information	
Reference to hazardous areas	See “Downloads – Documentation – Additional Information: Technical Section; Technical Explications”
Ratings per	ATEX: PTB 18 ATEX 1006 U / IECEx: PTB 18.0013U (Ex eb IIC Gb)
Rated voltage EN (Ex e II)	550 V
Rated current (Ex e II)	31 A
Rated current (Ex e II) with jumper	30 A

Power Loss	
Power loss, per pole (potential)	1.024 W
Rated current I_N for power loss specification	32 A
Resistance value for specified, current-dependent power loss	0.001 Ω

General information	
Wiring direction	Front-entry wiring

Connection Data

Clamping units	3
Total number of potentials	1
Number of levels	1
Number of jumper slots	2

Connection 1	
Connection technology	Push-in CAGE CLAMP®
Actuation type	Push-button
Connectable conductor materials	Copper
Nominal cross-section	4 mm²
Solid conductor	0.5 … 6 mm² / 20 … 10 AWG
Solid conductor; push-in termination	1 … 6 mm² / 14 … 10 AWG
Stranded conductor	0.5 … 6 mm² / 20 … 10 AWG
Fine-stranded conductor	0.5 … 6 mm² / 20 … 10 AWG
Fine-stranded conductor; with insulated ferrule	1.5 … 4 mm² / 20 … 12 AWG
Fine-stranded conductor; with ferrule; push-in termination	1.5 … 4 mm² / 18 … 12 AWG
Note (conductor cross-section)	Depending on the conductor characteristic, a conductor with a smaller cross-section can also be inserted via push-in termination.
Strip length	11 … 13 mm / 0.43 … 0.51 inches
Wiring direction	Front-entry wiring

Downloaded from Arrow.com.

Physical data

Width	6.2 mm / 0.244 inches
Height	65.5 mm / 2.579 inches
Depth from upper-edge of DIN-rail	32.9 mm / 1.295 inches
Depth	39.5 mm / 1.555 inches

Mechanical data

Mounting type	DIN-35 rail
Marking level	Center/side marking

Material data

Note (material data)	Information on material specifications can be found here
Color	gray
Material group	I
Insulation material (main housing)	Polyamide (PA66)
Flammability class per UL94	V0
Fire load	0.154 MJ
Actuator color	orange
Weight	9.1 g

Environmental requirements

Processing temperature	-35 ... +85 °C
Continuous operating temperature	-60 ... +105 °C

Environmental Testing

Test specification: Railway applications – Rolling stock – Electronic equipment	DIN EN 50155 (VDE 0115-200):2022-06
Test procedure: Railway applications – Rolling stock equipment – Vibration and shock tests	DIN EN 61373 (VDE 0115-0106):2011-04
Spectrum/Mounting location	Service life test, Category 1, Class A/B
Functional test with noise-like oscillations	Test passed according to Section 8 of the standard
Frequency	f_1 = 5 Hz to f_2 = 150 Hz
Acceleration	0.101g (highest test level used for all axes)
Test duration per axis	10 min.
Test directions	X, Y and Z axes
Monitoring of contact faults and interruptions	Passed
Voltage drop measurement before and after each axis	Passed
Simulated service life test through increased levels of noise-like oscillations	Test passed according to Section 9 of the standard
Frequency	f_1 = 5 Hz to f_2 = 150 Hz
Acceleration	0.572g (highest test level used for all axes)
Test duration per axis	5 h
Test directions	X, Y and Z axes
Extended testing: Monitoring of contact faults and interruptions	Passed
Extended testing: Voltage drop measurement before and after each axis	Passed
Shock test	Test passed according to Section 10 of the standard
Shock pulse form	Half sine
Acceleration	5g (highest test level used for all axes)
Shock duration	30 ms
Number of shocks (per axis)	3 pos. und 3 neg.

Downloaded from Arrow.com.

Environmental Testing

Test directions	X, Y and Z axes
Extended testing: Monitoring of contact faults and interruptions	Passed
Extended testing: Voltage drop measurement before and after each axis	Passed
Vibration and shock stress for rolling stock equipment	Passed

Commercial data

PU (SPU)	50 pcs
Packaging type	Box
Country of origin	DE
GTIN	4055143847193
Customs tariff number	85369010000

Product Classification

UNSPSC	39121410
eCl@ss 10.0	27-14-11-20
eCl@ss 9.0	27-14-11-20
ETIM 9.0	EC000897
ETIM 10.0	EC000897
ECCN	NO US CLASSIFICATION

Environmental Product Compliance

RoHS Compliance Status	Compliant,No Exemption

Approvals / Certificates

General approvals

Approval	Standard	Certificate Name
CCA DEKRA Certification B.V.	EN 60947	NTR NL 7666
CSA DEKRA Certification B.V.	C22.2	70175102
cURus Underwriters Laboratories Inc.	UL 1059	E45172
KEMA/KEUR DEKRA Certification B.V.	EN 60947	71-102877

Declarations of conformity and manufacturer's declarations

Approval	Standard	Certificate Name
ATEX-Attestation of Conformity WAGO GmbH & Co. KG	-	-
EU-Declaration of Conformity WAGO GmbH & Co. KG	-	-
Railway WAGO GmbH & Co. KG	-	Z00004405.000
UK-Declaration of Conformity WAGO GmbH & Co. KG	-	-

Downloaded from Arrow.com.

Approvals for marine applications

Approval	Standard	Certificate Name
ABS American Bureau of Shipping	-	24-0095985-PDA
BV Bureau Veritas S.A.	IEC 60947	58186/A0 BV
DNV GL Det Norske Veritas, Germanischer Lloyd	-	TAE00003JT
LR Lloyds Register	-	19/20050

Approvals for hazardous areas

Approval	Standard	Certificate Name
AEx Underwriters Laboratories Inc.	UL 60079	E185892 (AEx eb IIC resp. Ex eb IIC)
ATEX Physikalisch Technische Bundesanstalt	IEC 60079-0	PTB 18 ATEX 1006 U (II 2 G Ex eb IIC Gb bzw. I M 2 Ex eb I Mb)
CCCEx CQST/CNEx	GB/T 3836.3	2020312313000170 (Ex eb IIC Gb, Ex eb I Mb)
IECEx Physikalisch Technische Bundesanstalt	IEC 60079	IECEx PTB 18.00 13U (Ex eb IIC Gb and Ex eb I Mb)
INMETRO TÜV Rheinland do Brasil Ltda.	IEC 60079	TÜV 19.0086 U

Downloads

Environmental Product Compliance

Compliance Search

Environmental Product Compliance 2204-1301

Documentation

Bid Text

2204-1301	19.02.2019	xml 3.73 KB	
2204-1301	09.08.2018	docx 14.81 KB	

CAD/CAE-Data

CAD data

2D/3D Models 2204-1301

CAE data

EPLAN Data Portal 2204-1301

ZUKEN Portal 2204-1301

Downloaded from Arrow.com.

1 Compatible Products

1.1 Required Accessories

1.1.1 End plate

1.1.1.1 End plate

Item No.: 2004-1391
End and intermediate plate; 1 mm thick; gray

Item No.: 2004-1392
End and intermediate plate; 1 mm thick; orange

Item No.: 209-191
Separator for Ex e/Ex i applications; 3 mm thick; 120 mm wide; orange

1.2 Optional Accessories

1.2.1 DIN-rail

1.2.1.1 Mounting accessories

Item No.: 210-196
Aluminum carrier rail; 35 x 8.2 mm; 1.6 mm thick; 2 m long; unslotted; similar to EN 60715; silver-colored

Item No.: 210-198
Copper carrier rail; 35 x 15 mm; 2.3 mm thick; 2 m long; unslotted; according to EN 60715; copper-colored

Item No.: 210-197
Steel carrier rail; 35 x 15 mm; 1.5 mm thick; 2 m long; slotted; similar to EN 60715; silver-colored

Item No.: 210-114
Steel carrier rail; 35 x 15 mm; 1.5 mm thick; 2 m long; unslotted; similar to EN 60715; silver-colored

Item No.: 210-118
Steel carrier rail; 35 x 15 mm; 2.3 mm thick; 2 m long; unslotted; according to EN 60715; silver-colored

Item No.: 210-115
Steel carrier rail; 35 x 7.5 mm; 1 mm thick; 2 m long; slotted; according to EN 60715; "Hole width 18 mm; silver-colored

Item No.: 210-112
Steel carrier rail; 35 x 7.5 mm; 1 mm thick; 2 m long; slotted; according to EN 60715; "Hole width 25 mm; silver-colored

Item No.: 210-113
Steel carrier rail; 35 x 7.5 mm; 1 mm thick; 2 m long; unslotted; according to EN 60715; silver-colored

1.2.2 End plate

1.2.2.1 End plate

Item No.: 2004-1393
Seperator plate; 2 mm thick; oversized; gray

Item No.: 2004-1394
Seperator plate; 2 mm thick; oversized; orange

1.2.3 Ferrule

1.2.3.1 Ferrule

Item No.: 216-262
Ferrule; Sleeve for 0.75 mm² / 18 AWG; insulated; electro-tin plated; electrolytic copper; gastight crimped; acc. to DIN 46228, Part 4/09.90; gray

Item No.: 216-263
Ferrule; Sleeve for 1 mm² / AWG 18; insulated; electro-tin plated; electrolytic copper; gastight crimped; acc. to DIN 46228, Part 4/09.90; red

Item No.: 216-264
Ferrule; Sleeve for 1.5 mm² / AWG 16; insulated; electro-tin plated; electrolytic copper; gastight crimped; acc. to DIN 46228, Part 4/09.90; black

Item No.: 216-266
Ferrule; Sleeve for 2.5 mm² / AWG 14; insulated; electro-tin plated; electrolytic copper; gastight crimped; acc. to DIN 46228, Part 4/09.90; blue

Item No.: 216-267
Ferrule; Sleeve for 4 mm² / AWG 12; insulated; electro-tin plated; electrolytic copper; gastight crimped; acc. to DIN 46228, Part 4/09.90; gray

Downloaded from Arrow.com.

1.2.4 Installation

1.2.4.1 Cover

Item No.: 709-156
Cover; Type 3; suitable for cover carrier, type 3; 1 m long; transparent

1.2.4.2 Cover carrier

Item No.: 709-169
Cover carrier; Type 3; incl. fixing/retaining screws and knurled nut; suitable for 279 to 282 and 880 Series rail-mounted terminal blocks; suitable for 264 Series miniature rail-mounted terminal blocks; suitable for 270 Series sensor and actuator terminal blocks; gray

1.2.5 Insulation stop

1.2.5.1 Insulation stop

Item No.: 2004-171
Insulation stop; 0.25 - 0.5 mm²; 5 pieces/strip; light gray

Item No.: 2004-172
Insulation stop; 0.75 - 1 mm²; 5 pieces/strip; dark gray

1.2.6 Jumper

1.2.6.1 Jumper

Item No.: 2004-406/020-000
Delta jumper; insulated; light gray

Item No.: 2004-410
Jumper; 10-way; insulated; light gray

Item No.: 2004-402
Jumper; 2-way; insulated; light gray

Item No.: 2004-403
Jumper; 3-way; insulated; light gray

Item No.: 2004-404
Jumper; 4-way; insulated; light gray

Item No.: 2004-405
Jumper; 5-way; insulated; light gray

Item No.: 2004-406
Jumper; 6-way; insulated; light gray

Item No.: 2004-407
Jumper; 7-way; insulated; light gray

Item No.: 2004-408
Jumper; 8-way; insulated; light gray

Item No.: 2004-409
Jumper; 9-way; insulated; light gray

Item No.: 2004-440
Jumper; from 1 to 10; insulated; light gray

Item No.: 2004-433
Jumper; from 1 to 3; insulated; light gray

Item No.: 2004-434
Jumper; from 1 to 4; insulated; light gray

Item No.: 2004-435
Jumper; from 1 to 5; insulated; light gray

Item No.: 2004-436
Jumper; from 1 to 6; insulated; light gray

Item No.: 2004-437
Jumper; from 1 to 7; insulated; light gray

Item No.: 2004-438
Jumper; from 1 to 8; insulated; light gray

Item No.: 2004-439
Jumper; from 1 to 9; insulated; light gray

Item No.: 2004-405/011-000
Star point jumper; 3-way; insulated; light gray

Item No.: 2006-499
Step-down jumper; from 2006/2004 to 2004/2002/2001 series; from 2206/2204 to 2204/2202/2201 series; insulated; light gray

Downloaded from Arrow.com.

1.2.6.1 Jumper

Item No.: 2016-499
Step-down jumper; from 2016/2010 to 2010/2006/2004/2002 series; from 2216/2210 to 2210/2206/2204/2202 series; insulated; light gray

Item No.: 210-103
Wire commoning chain; 0.5 mm²; insulated; black

Item No.: 210-123
Wire commoning chain; insulated; blue

1.2.7 Marking

1.2.7.1 Group marker carrier

Item No.: 2009-191
Group marker carrier; gray

Item No.: 2009-192
Group marker carrier; gray

Item No.: 2009-193
Group marker carrier; gray

1.2.7.2 Marker

Item No.: 2009-145/000-006
Mini-WSB Inline; for Smart Printer; 1700 pieces on roll; stretchable 5 - 5.2 mm; plain; snap-on type; blue

Item No.: 2009-145/000-007
Mini-WSB Inline; for Smart Printer; 1700 pieces on roll; stretchable 5 - 5.2 mm; plain; snap-on type; gray

Item No.: 2009-145/000-023
Mini-WSB Inline; for Smart Printer; 1700 pieces on roll; stretchable 5 - 5.2 mm; plain; snap-on type; green

Item No.: 2009-145/000-012
Mini-WSB Inline; for Smart Printer; 1700 pieces on roll; stretchable 5 - 5.2 mm; plain; snap-on type; orange

Item No.: 2009-145/000-005
Mini-WSB Inline; for Smart Printer; 1700 pieces on roll; stretchable 5 - 5.2 mm; plain; snap-on type; red

Item No.: 2009-145/000-024
Mini-WSB Inline; for Smart Printer; 1700 pieces on roll; stretchable 5 - 5.2 mm; plain; snap-on type; violet

Item No.: 2009-145
Mini-WSB Inline; for Smart Printer; 1700 pieces on roll; stretchable 5 - 5.2 mm; plain; snap-on type; white

Item No.: 2009-145/000-002
Mini-WSB Inline; for Smart Printer; 1700 pieces on roll; stretchable 5 - 5.2 mm; plain; snap-on type; yellow

Item No.: 248-501/000-006
Mini-WSB marking card; as card; not stretchable; plain; snap-on type; blue

Item No.: 248-501/000-007
Mini-WSB marking card; as card; not stretchable; plain; snap-on type; gray

Item No.: 248-501/000-023
Mini-WSB marking card; as card; not stretchable; plain; snap-on type; green

Item No.: 248-501/000-017
Mini-WSB marking card; as card; not stretchable; plain; snap-on type; light green

Item No.: 248-501/000-012
Mini-WSB marking card; as card; not stretchable; plain; snap-on type; orange

Item No.: 248-501/000-005
Mini-WSB marking card; as card; not stretchable; plain; snap-on type; red

Item No.: 248-501/000-024
Mini-WSB marking card; as card; not stretchable; plain; snap-on type; violet

Item No.: 248-501
Mini-WSB marking card; as card; not stretchable; plain; snap-on type; white

Item No.: 248-501/000-002
Mini-WSB marking card; as card; not stretchable; plain; snap-on type; yellow

Item No.: 793-5501/000-006
WMB marking card; as card; for terminal block width 5 - 17.5 mm; stretchable 5 - 5.2 mm; plain; snap-on type; blue

Item No.: 793-5501/000-007
WMB marking card; as card; for terminal block width 5 - 17.5 mm; stretchable 5 - 5.2 mm; plain; snap-on type; gray

Item No.: 793-5501/000-023
WMB marking card; as card; for terminal block width 5 - 17.5 mm; stretchable 5 - 5.2 mm; plain; snap-on type; green

Item No.: 793-5501/000-017
WMB marking card; as card; for terminal block width 5 - 17.5 mm; stretchable 5 - 5.2 mm; plain; snap-on type; light green

Item No.: 793-5501/000-012
WMB marking card; as card; for terminal block width 5 - 17.5 mm; stretchable 5 - 5.2 mm; plain; snap-on type; orange

Item No.: 793-5501/000-005
WMB marking card; as card; for terminal block width 5 - 17.5 mm; stretchable 5 - 5.2 mm; plain; snap-on type; red

Item No.: 793-5501/000-024
WMB marking card; as card; for terminal block width 5 - 17.5 mm; stretchable 5 - 5.2 mm; plain; snap-on type; violet

Item No.: 793-5501
WMB marking card; as card; for terminal block width 5 - 17.5 mm; stretchable 5 - 5.2 mm; plain; snap-on type; white

Item No.: 793-5501/000-002
WMB marking card; as card; for terminal block width 5 - 17.5 mm; stretchable 5 - 5.2 mm; plain; snap-on type; yellow

Item No.: 793-501/000-006
WMB marking card; as card; not stretchable; plain; snap-on type; blue

Item No.: 793-501/000-007
WMB marking card; as card; not stretchable; plain; snap-on type; gray

Item No.: 793-501/000-023
WMB marking card; as card; not stretchable; plain; snap-on type; green

Item No.: 793-501/000-017
WMB marking card; as card; not stretchable; plain; snap-on type; light green

Item No.: 793-501/000-012
WMB marking card; as card; not stretchable; plain; snap-on type; orange

Item No.: 793-501/000-005
WMB marking card; as card; not stretchable; plain; snap-on type; red

Downloaded from Arrow.com.

1.2.7.2 Marker

Item No.: 793-501/000-024
WMB marking card; as card; not stretchable; plain; snap-on type; violet

Item No.: 793-501
WMB marking card; as card; not stretchable; plain; snap-on type; white

Item No.: 793-501/000-002
WMB marking card; as card; not stretchable; plain; snap-on type; yellow

Item No.: 2009-115/000-006
WMB-Inline; for Smart Printer; 1500 pieces on roll; stretchable 5 - 5.2 mm; plain; snap-on type; blue

Item No.: 2009-115/000-007
WMB-Inline; for Smart Printer; 1500 pieces on roll; stretchable 5 - 5.2 mm; plain; snap-on type; gray

Item No.: 2009-115/000-023
WMB-Inline; for Smart Printer; 1500 pieces on roll; stretchable 5 - 5.2 mm; plain; snap-on type; green

Item No.: 2009-115/000-017
WMB-Inline; for Smart Printer; 1500 pieces on roll; stretchable 5 - 5.2 mm; plain; snap-on type; light green

Item No.: 2009-115/000-012
WMB-Inline; for Smart Printer; 1500 pieces on roll; stretchable 5 - 5.2 mm; plain; snap-on type; orange

Item No.: 2009-115/000-024
WMB-Inline; for Smart Printer; 1500 pieces on roll; stretchable 5 - 5.2 mm; plain; snap-on type; violet

Item No.: 2009-115
WMB-Inline; for Smart Printer; 1500 pieces on roll; stretchable 5 - 5.2 mm; plain; snap-on type; white

Item No.: 2009-115/000-002
WMB-Inline; for Smart Printer; 1500 pieces on roll; stretchable 5 - 5.2 mm; plain; snap-on type; yellow

1.2.7.3 Marker carrier

Item No.: 2009-198
Adaptor; gray

1.2.7.4 Marking strip

Item No.: 2009-110
Marking strips; for Smart Printer; on reel; not stretchable; plain; snap-on type; white

1.2.8 Screwless end stop

1.2.8.1 Mounting accessories

Item No.: 249-117
Screwless end stop; 10 mm wide; for DIN-rail 35 x 15 and 35 x 7.5; gray

Item No.: 249-116
Screwless end stop; 6 mm wide; for DIN-rail 35 x 15 and 35 x 7.5; gray

1.2.9 Test and measurement

1.2.9.1 Testing accessories

Item No.: 2004-511
Modular TOPJOB®S connector; modular; for jumper contact slot; 1-pole; gray

Item No.: 2004-552
Modular TOPJOB®S connector; modular; for jumper contact slot; 2-pole; gray

Item No.: 2004-553
Modular TOPJOB®S connector; modular; for jumper contact slot; 3-pole; gray

Item No.: 2004-554
Modular TOPJOB®S connector; modular; for jumper contact slot; 4-pole; gray

Item No.: 2004-555
Modular TOPJOB®S connector; modular; for jumper contact slot; 5-pole; gray

Item No.: 2004-549
Spacer module; modular; e.g., for bridging commoned terminal blocks; gray

Item No.: 2009-174
Test plug adapter; for 4 mm Ø test plugs; for testing TOPJOB®S rail-mounted terminal blocks; gray

Item No.: 2009-182
Testing tap; for max. 2.5 mm²; tool-free connection for individual test wires 0.08 - 2.5 mm; gray

Downloaded from Arrow.com.

1.2.10 Tool

1.2.10.1 Operating tool

Item No.: 210-658
Operating tool; Blade: 3.5 x 0.5 mm; with a partially insulated shaft; angled; short; multi-coloured

Item No.: 210-720
Operating tool; Blade: 3.5 x 0.5 mm; with a partially insulated shaft; multicoloured

Installation Notes

Conductor termination

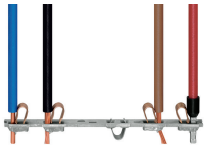

All conductor types at a glance

Push-in termination of solid and ferruled conductors

Insert fine-stranded conductors via operating tool.

Removing all conductors via operating tool.

Commoning

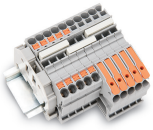

Insert a push-in type jumper bar and push down until it hits the backstop.

Commoning with step-down jumpers.

Step-down jumper (2006-499) commons 6/4 mm² (10/12 AWG) terminal blocks (2206/2204 Series) with 4/2.5/1.5 mm² (AWG 12/14/16) terminal blocks (2204/2202/2201 Series).

Testing

Testing with a 2 mm Ø test plug (max. 42 V).

Marking

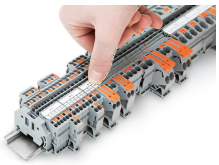

Snapping a marking strip into a marker slot.

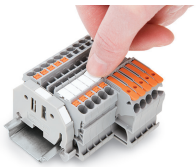

Snapping a marking strip into the marker slot.

Downloaded from Arrow.com.