Data sheet

IE-PS-RJ45-FH-BK

Weidmüller Interface GmbH & Co. KG
Klingenbergstraße 26
D-32758 Detmold
Germany

www.weidmueller.com

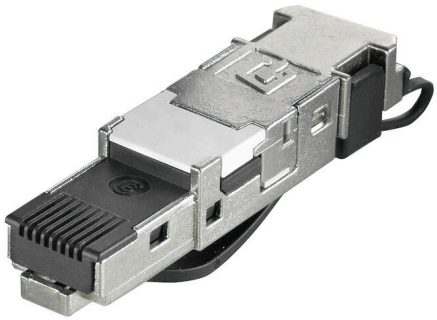

RJ45 plug-in connector (tool-less) according to IEC 60603-7-51 for wire outer diameters up to 1.6 mm

General ordering data

Version	RJ45 IDC plug, Cat.6A / Class EA (ISO/IEC 11801 2010), 8-core, 4-core, EIA/TIA T568 A, EIA/TIA T568 B, PROFINET
Order No.	1963600000
Type	IE-PS-RJ45-FH-BK
GTIN (EAN)	4032248645725
Qty.	10 items

Downloaded from Arrow.com.

Data sheet

IE-PS-RJ45-FH-BK

Weidmüller Interface GmbH & Co. KG
Klingenbergstraße 26
D-32758 Detmold
Germany

www.weidmueller.com

Technical data

Approvals

Approvals	
ROHS	Conform
UL File Number Search	UL Website
Certificate no. (cULus)	E316369

Dimensions and weights

Net weight	17.83 g

Temperatures

Storage temperature		Operating temperature	-40 °C...70 °C
Installation temperature			

Environmental Product Compliance

RoHS Compliance Status	Compliant without exemption
REACH SVHC	No SVHC above 0.1 wt%

General data

Halogen	No	Material locking lever	PA UL94-V0
Material strain relief	PA UL94-V0	Fire load	77 kJ
Connection 1	RJ45	Connection 2	IDC
Composition	Eight-wire field-assembled RJ45 plug with colour coding on the plug, TIA A/B/ProfiNet, multiport-ready	Wiring	8-core, 4-core, EIA/TIA T568 A, EIA/TIA T568 B, PROFINET
Colour	Light Grey	Housing main material	Zinc diecast
Insulation cross-section, min.	0.85 mm	Insulation cross-section, max.	1.6 mm
Category	Cat.6A / Class EA (ISO/IEC 11801 2010)	Contact material	Phosphorus bronze
Contact surface	Gold over nickel	Connection diameter, solid	0.41...0.64 mm
Conductor connection cross-section, solid (AWG)	AWG 24/1...AWG 22/1	Conductor connection cross-section, solid	0.13...0.32 mm²
Connection diameter, flexible	0.48...0.76 mm	Conductor connection cross-section, flexible (AWG)	AWG 26/7...AWG 22/7
Wire connection cross section, finely stranded, min.	0.14 mm²	Conductor connection cross-section, flexible	0.14...0.35 mm²
Conductor connection cross-section, extremely flexible	, Approval of the cable by Weidmüller necessary	Conductor connection cross-section, extremely flexible (AWG)	, Approval of the cable by Weidmüller necessary
Note, very finely stranded line connection	Approval of the cable by Weidmüller necessary	MICE classification M	M1
MICE classification I	I1	MICE classification C	C1
MICE classification E	E3	Sheath diameter, min.	5.5 mm
Sheath diameter, max.	8.5 mm	Shielding	360° all-round enclosure
Protection degree	IP20	Insertion force	≤ 30 N
Plugging cycles	750	Material insulator	PA UL94-V0
Ability to reconnect	≥ 10 cycles (for the same or larger cross-section)		

Downloaded from Arrow.com.

Data sheet

IE-PS-RJ45-FH-BK

Weidmüller Interface GmbH & Co. KG
Klingenbergstraße 26
D-32758 Detmold
Germany

www.weidmueller.com

Technical data

Electrical properties

Contact resistance	≤ 20 mΩ	Dielectric strength, contact / shield	≥ 1500 V AC/DC
Dielectric strength, contact / contact	≥ 1000 V AC/DC	Insulation resistance	≥ 500 MΩ
Current-carrying capacity at 50 °C	1 A	PoE / PoE+	conforming to IEEE 802.3at

General standards

Connector standard	IEC 60603-7-51	UL standard for communication accessories	UL 1863
Application-specific communication cable facilities	PROFINET installation instructions	IP protection classes	IEC 60529
Certificate no. (cULus)	E316369		

Classifications

ETIM 8.0	EC001121	ETIM 9.0	EC001121
ETIM 10.0	EC001121	ECLASS 14.0	27-44-03-90
ECLASS 15.0	27-44-03-90		

Downloaded from Arrow.com.

IE-PS-RJ45-FH-BK

Weidmüller Interface GmbH & Co. KG
Klingenbergstraße 26
D-32758 Detmold
Germany

www.weidmueller.com

Drawings

Printing



Dimensioned drawing

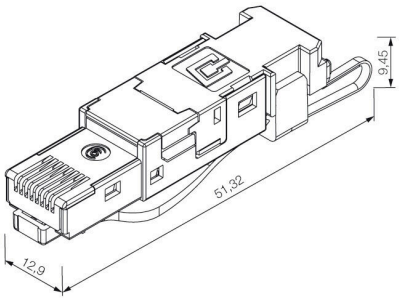

Downloaded from Arrow.com.

Weidmüller Interface GmbH & Co. KG
Klingenbergstraße 26
D-32758 Detmold
Germany

www.weidmueller.com

Accessories

Pressing tool



When working with live voltages, you must follow special guidelines and use special tools - tools which have been specially produced and tested for this purpose.
Weidmüller offers a complete line of pliers which comply with national and international testing standards.
All pliers are produced and tested according to DIN EN 60900.
The pliers are ergonomically designed to fit to the hand form, and thus feature an improved hand position. The fingers are not pressed together - this results in less fatigue during operation.

General ordering data

Type	PWZ RJ45	Version
Order No.	1118040000	Pressing tools
GTIN (EAN)	4032248899197	
Qty.	1 ST	

Dust caps



For protecting your devices against dust and dirt.

General ordering data

Type	IE-PP-RJ45	Version
Order No.	2552580000	
GTIN (EAN)	4050118562583	
Qty.	10 ST	

Coloured strain relief



For identifying your IP20 RJ45 plugs, which can be assembled on-site, in 6 different colours

Downloaded from Arrow.com.

Weidmüller

Weidmüller Interface GmbH & Co. KG
Klingenbergstraße 26
D-32758 Detmold
Germany

www.weidmueller.com

Accessories

General ordering data

Type	IE-CR-IP20-RJ45-FH-GN	Version
Order No.	1963100000	Industrial Ethernet, Colour coding ring, green, Strain relief, green
GTIN (EAN)	4032248645282	
Qty.	10 ST	
Type	IE-CR-IP20-RJ45-FH-GY	Version
Order No.	1963060000	Industrial Ethernet, Colour coding ring, grey, Strain relief, grey
GTIN (EAN)	4032248645244	
Qty.	10 ST	
Type	IE-CR-IP20-RJ45-FH-BU	Version
Order No.	1963080000	Industrial Ethernet, Colour coding ring, blue, Strain relief, blue
GTIN (EAN)	4032248645268	
Qty.	10 ST	
Type	IE-CR-IP20-RJ45-FH-OG	Version
Order No.	1963070000	Industrial Ethernet, Colour coding ring, orange, Strain relief, orange
GTIN (EAN)	4032248645251	
Qty.	10 ST	
Type	IE-CR-IP20-RJ45-FH-YE	Version
Order No.	1963090000	Industrial Ethernet, Colour coding ring, yellow, Strain relief, yellow
GTIN (EAN)	4032248645275	
Qty.	10 ST	
Type	IE-CR-IP20-RJ45-FH-WH	Version
Order No.	1963050000	Industrial Ethernet, Colour coding ring, white, Strain relief, white
GTIN (EAN)	4032248645237	
Qty.	10 ST	

Downloaded from Arrow.com.