Data Sheet

Customer：	
Product :	Thin Film Precision Chip Resistor - AR Series
Size:	0201/0402/0603/0805/1206/1210/2010/2512
Issued Date:	22-May-24
Edition :	REV.F5

RoHS Compliant

VIKING TECH CORPORATION
光頡科技股份有限公司

No.70, Guangfu N. Rad.,
Hsin Chu Industrial Park,
Hukou Hsiang, Hsin Chu Hsien,
303, Taiwan
TEL:886-3-5972931
FAX:886-3-5972935•886-3-5973494
E-mail:sales@viking.com.tw

VIKING TECH CORPORATION KAOHSIUNG BRANCH
光頡科技股份有限公司高雄分公司

No.248-3, Sin-Sheng Rd., Cian-Jhen Dist., Kaohsiung,
806, Taiwan
TEL:886-7-8217999
FAX:886-7-8228229
E-mail:sales@viking.com.tw

Viking Electronics (WUXI) CO., LTD.
光頡電子(無錫)有限公司

No.1A,(Xixia Road),Machinery & Industry Park,
National Hi-Tech Industrial Development Zone of
Wuxi, Wuxi, Jiangsu Province, China
Zip Code:214028
TEL:86-510-85203339
FAX:86-510-85203667•86-510-85203977
E-mail:wuxisales@tmtec.com.tw

Produced by (QC)	Checked (QC)	Approved by (QC)	Prepared by (Sales)	Accepted by (Customer)
22-May-24	22-May-24	22-May-24	22-May-24	
Chun	***Ben Chang***	***Ben Chang***		

Downloaded from Arrow.com.

Thin Film Precision Chip Resistor
(AR Series)

Features

- Advanced thin film technology
- Very tight tolerance down to ±0.01%
- Extremely low TCR down to ±1PPM/°C
- Wide resistance range 1ohm ~ 3Mega ohm
- Miniature size 0201 available
- AEC-Q200 Compliance (0201 product is excluded)
- Test proven immunity to Biased humidity(85°C/ 85% RH)

Applications

- Medical Equipment
- Testing / Measurement Equipment
- Printer Equipment
- Automatic Equipment Controller
- Converters
- Communication Device, Cell Phone, GPS, PDA

Construction

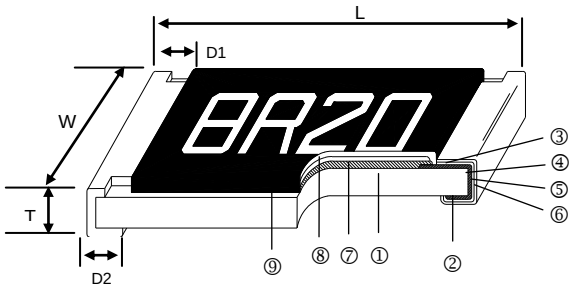

①	Alumina Substrate	④	Edge Electrode	⑦	Resistor Layer
②	Bottom Electrode	⑤	Barrier Layer	⑧	Overcoat
③	Top Electrode	⑥	External Electrode	⑨	Marking

Dimensions

Unit: mm

Type	Size (Inch)	L	W	T	D1	D2	Weight (g) (1000pcs)
AR01	0201	0.58±0.05	0.29±0.05	0.23±0.05	0.12±0.05	0.15±0.05	0.14
AR02	0402	1.00±0.05	0.50±0.05	0.30±0.05	0.20±0.15	0.20±0.10	0.54
AR03	0603	1.55±0.10	0.80±0.10	0.45±0.10	0.30±0.25	0.30±0.20	1.83
AR05	0805	2.00±0.15	1.25±0.15	0.55±0.10	0.30±0.25	0.40±0.20	4.71
AR06	1206	3.05±0.15	1.55±0.15	0.55±0.10	0.42±0.30	0.35±0.25	9.02
AR13	1210	3.10±0.15	2.40±0.15	0.55±0.10	0.40±0.30	0.55±0.25	10
AR10	2010	4.90±0.15	2.40±0.15	0.55±0.10	0.60±0.40	0.50±0.25	23.61
AR10(1/2W)	2010(1/2W)	4.90±0.15	2.40±0.15	0.55±0.10	0.60±0.40	2.20±0.25	26.68
AR12	2512	6.30±0.15	3.10±0.15	0.55±0.10	0.60±0.40	0.50±0.25	38.06
AR12(1W)1~100Ω	2512(1W)	6.30±0.15	3.10±0.15	0.55±0.10	0.60±0.40	0.50±0.25	44.65
AR12(1W)101Ω above	2512(1W)	6.30±0.15	3.10±0.15	0.55±0.10	0.60±0.40	2.50±0.25	44.65

Downloaded from Arrow.com.

■Part Numbering

AR	03	B	T	B	X	1001	
Product Type	Dimensions (L×W)	Resistance Tolerance	Packaging Code	TCR (PPM/°C)	Power Rating	Resistance	Marking Code
	01: 0201 02: 0402 03: 0603 05: 0805 06: 1206 13: 1210 10: 2010 12: 2512	T: ±0.01% A: ±0.05% B: ±0.1% C: ±0.25% D: ±0.5% F: ±1%	T: Taping Reel B: Bulk	5: ±1 X: ±2 O:±3 S: ±5 B: ±10 N: ±15 C: ±25 D: ±50	: Standard (see Remark) N: 1/20W Y: 1/16W X: 1/10W W: 1/8W M: 1/6W P: 1/5W V: 1/4W O: 1/3W U: 1/2W Q: 3/4W T: 1W	0010: 1Ω 4R70: 4.7Ω 1001: 1KΩ 1004: 1MΩ	: Standard Marking for E96 / E24 N: No Marking

*Remark: Standard part no need for power rating code.

■Derating Curve

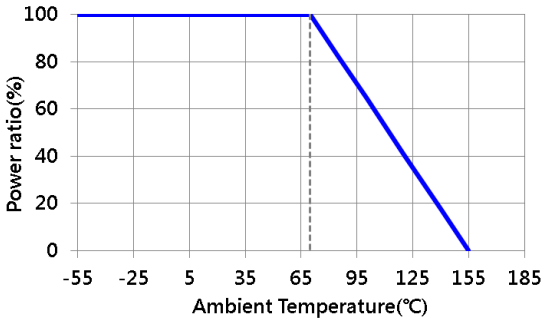

■Standard Electrical Specifications

Type \ Item	Power Rating at 70°C	Operating Temp. Range	Max. Operating Voltage	Max. Overload Voltage	Resistance Range ±0.05%	Resistance Range ±0.1%	Resistance Range ±0.25%	Resistance Range ±0.5%	Resistance Range ±1%	TCR (PPM/°C)
AR01 (0201)	1/32W	-55 ~ +155°C	15V	30V	—	22Ω - 75KΩ				±25,±50
AR02 (0402)	1/16W	-55 ~ +155°C	50V	100V	49.9Ω - 12KΩ	4Ω - 511KΩ				±25,±50
AR03 (0603)	1/16W	-55 ~ +155°C	50V	100V	4.7Ω -332KΩ	1Ω - 1MΩ				±25,±50
AR05 (0805)	1/10W	-55 ~ +155°C	100V	200V	4.7Ω -1MΩ	1Ω - 2MΩ				±25,±50
AR06 (1206)	1/8W	-55 ~ +155°C	150V	300V	4.7Ω - 1MΩ	1Ω - 3MΩ				±25,±50
AR13 (1210)	1/4W									
AR10 (2010)	1/4W	-55 ~ +155°C	150V	300V	4.7Ω - 1MΩ	1Ω - 3MΩ				±25,±50
AR12 (2512)	1/2W									

■Lower Resistance:1~10Ω

Downloaded from Arrow.com.

■Special Electrical Specifications

Type \ Item	Power Rating at 70°C	Operating Temp. Range	Max. Operating Voltage	Max. Overload Voltage	Resistance Range ±0.01%	±0.05%	±0.1%	±0.25%	±0.5%	±1%	TCR (PPM/°C)
AR02 (0402)	1/16W	-55 ~ +155°C	50V	100V	49.9Ω - 4.99KΩ			—			±1, ±2,±3
					49.9Ω - 20KΩ						±5
					49.9Ω - 20KΩ		49.9Ω - 100KΩ				±10, ±15
AR03 (0603)	1/16W	-55 ~ +155°C	50V	100V	24.9Ω - 15KΩ			—			±1, ±2,±3
					24.9Ω - 60KΩ						±5
					24.9Ω - 100KΩ	4.7Ω-332KΩ	4.7Ω - 511KΩ				±10, ±15
AR05 (0805)	1/10W	-55 ~ +155°C	100V	200V	24.9Ω - 30KΩ			—			±1, ±2,±3
					24.9Ω - 150KΩ						±5
					24.9Ω - 200KΩ	4.7Ω – 1MΩ					±10, ±15
AR06 (1206)	1/8W	-55 ~ +155°C	150V	300V	24.9Ω - 49.9KΩ			—			±1, ±2,±3
					24.9Ω - 300KΩ						±5
					24.9Ω - 499KΩ	4.7Ω – 1.5MΩ					±10, ±15
AR13 (1210)	1/ 4W	-55 ~ +155°C	150V	300V	24.9Ω - 49.9KΩ			—			±1, ±2,±3
					24.9Ω - 300KΩ						±5
					24.9Ω - 499KΩ	4.7Ω - 1MΩ					±10, ±15
AR10 (2010)	1/4W	-55 ~ +155°C	150V	300V	24.9Ω - 100KΩ			—			±1, ±2,±3
					24.9Ω - 300KΩ						±5
					24.9Ω - 499KΩ	4.7Ω - 1MΩ					±10, ±15
AR12 (2512)	1/2W	-55 ~ +155°C	150V	300V	24.9Ω - 100KΩ			—			±1, ±2,±3
					24.9Ω - 300KΩ						±5
					24.9Ω - 499KΩ	4.7Ω - 1MΩ					±10, ±15

■High Power Rating Electrical Specifications

Type \ Item	Power Rating at 70°C	Operating Temp. Range	Max. Operating Voltage	Max. Overload Voltage	Resistance Range ±0.01%	±0.05%	±0.1%	±0.25%	±0.5%	±1%	TCR (PPM/°C)
AR01 (0201)	1/20W	-55 ~ +155°C	25V	50V	—		22Ω - 75KΩ				±25,±50
AR02 (0402)	1/10W	-55 ~ +155°C	50V	100V	49.9Ω - 4.99KΩ			—			±1, ±2,±3
					49.9Ω - 20KΩ						±5
					49.9Ω - 12KΩ		49.9Ω - 100KΩ				±10, ±15
					—	49.9Ω - 12KΩ	4.7Ω~255KΩ				±25,±50
AR03 (0603)	1/10W	-55 ~ +155°C	75V	150V	24.9Ω - 15KΩ			—			±1, ±2,±3
					24.9Ω - 60KΩ						±5
					24.9Ω - 100KΩ	4.7Ω - 332KΩ	4.7Ω - 511KΩ				±10,±15
							1Ω -1MΩ				±25,±50
	1/6W(Ultra)	-55 ~ +155°C	100V	150V	—	10Ω - 332KΩ					±25,±50
AR05 (0805)	1/8W	-55 ~ +155°C	150V	300V	24.9Ω - 30KΩ			—			±1, ±2,±3
					24.9Ω -150KΩ						±5
					24.9Ω - 200KΩ	4.7Ω -511KΩ	4.7Ω -1MΩ				±10, ±15
							1Ω - 2MΩ				±25,±50
	1/4W(Ultra)	-55 ~ +155°C	150V	300V	—	10Ω - 499KΩ					±25,±50

Downloaded from Arrow.com.

<table>
<tr><td rowspan="6">AR06
(1206)</td><td rowspan="4">1/4W</td><td rowspan="4">-55 ~ +155℃</td><td rowspan="4">200V</td><td rowspan="4">400V</td><td colspan="2">24.9Ω - 49.9KΩ</td><td>—</td><td>±1, ±2,±3</td></tr>
<tr><td colspan="3">24.9Ω - 300KΩ</td><td>±5</td></tr>
<tr><td rowspan="2">24.9Ω - 499KΩ</td><td colspan="2">4.7Ω - 1MΩ</td><td>±10,±15</td></tr>
<tr><td>1Ω - 1MΩ</td><td>1Ω - 3MΩ</td><td>±25,±50</td></tr>
<tr><td>1/3W(Ultra)</td><td>-55 ~ +155℃</td><td>200V</td><td>400V</td><td>—</td><td colspan="2">10Ω ~1MΩ</td><td>±25,±50</td></tr>
<tr><td rowspan="4">AR13
(1210)</td><td rowspan="4">1/3W</td><td rowspan="4">-55 ~ +155℃</td><td rowspan="4">200V</td><td rowspan="4">400V</td><td colspan="2">24.9Ω – 49.9KΩ</td><td>—</td><td>±1, ±2,±3</td></tr>
<tr><td colspan="3">24.9Ω - 300KΩ</td><td>±5</td></tr>
<tr><td rowspan="2">24.9Ω - 499KΩ</td><td colspan="2">4.7Ω - 1MΩ</td><td>±10,±15</td></tr>
<tr><td>1Ω - 1MΩ</td><td>1Ω - 3MΩ</td><td>±25,±50</td></tr>
<tr><td rowspan="6">AR10(2010)</td><td rowspan="4">1/3W</td><td rowspan="4">-55 ~ +155℃</td><td rowspan="4">200V</td><td rowspan="4">400V</td><td colspan="2">24.9Ω - 49.9KΩ</td><td>—</td><td>±1, ±2,±3</td></tr>
<tr><td colspan="3">24.9Ω - 300KΩ</td><td>±5</td></tr>
<tr><td rowspan="2">24.9Ω - 499KΩ</td><td colspan="2">4.7Ω - 1MΩ</td><td>±10,±15</td></tr>
<tr><td>1Ω - 1MΩ</td><td>1Ω - 3MΩ</td><td>±25,±50</td></tr>
<tr><td rowspan="2">1/2W(Ultra)</td><td rowspan="2">-55 ~ +155℃</td><td rowspan="2">200V</td><td rowspan="2">400V</td><td>24.9Ω - 2KΩ</td><td>4.7Ω –1MΩ</td><td>1Ω –1MΩ</td><td>±10,±15</td></tr>
<tr><td>24.9Ω - 2KΩ</td><td>4.7Ω –1MΩ</td><td>4.7Ω – 3MΩ</td><td>1Ω –3MΩ</td><td>±25,±50</td></tr>
<tr><td rowspan="4">AR12(2512)</td><td rowspan="2">3/4W</td><td rowspan="2">-55 ~ +155℃</td><td rowspan="2">200V</td><td rowspan="2">400V</td><td>24.9Ω - 2KΩ</td><td>4.7Ω – 2KΩ</td><td>1Ω – 2KΩ</td><td>±10,±15</td></tr>
<tr><td>24.9Ω - 2KΩ</td><td>4.7Ω – 2KΩ</td><td>4.7Ω – 3MΩ</td><td>1Ω – 3MΩ</td><td>±25,±50</td></tr>
<tr><td rowspan="2">1W(Ultra)</td><td rowspan="2">-55 ~ +155℃</td><td rowspan="2">200V</td><td rowspan="2">400V</td><td>24.9Ω - 2KΩ</td><td>4.7Ω –1MΩ</td><td>1Ω –1MΩ</td><td>±10,±15</td></tr>
<tr><td>24.9Ω - 2KΩ</td><td>4.7Ω –1MΩ</td><td>4.7Ω – 3MΩ</td><td>1Ω – 3MΩ</td><td>±25,±50</td></tr>
</table>

Operating Voltage=$\sqrt{(P*R)}$ or Max. operating voltage listed above, whichever is lower.
Overload Voltage=2.5*$\sqrt{(P*R)}$ or Max. overload voltage listed above, whichever is lower.

■Viking is capable of manufacturing the optional spec based on customer's requirement.
(Lower Resistance:1~10Ω ; High Power Rating)

Downloaded from Arrow.com.

■Environmental Characteristics

Item	Requirement		Test Method
	Tol. ≦ 0.05%	Tol. > 0.05%	
Temperature Coefficient of Resistance (T.C.R.)	As Spec.		**MIL-STD-202 Method 304** +25/-55/+25/+125/+25°C
Short Time Overload	ΔR±0.05%	ΔR±0.1% ΔR ± 0.2% for 0201	**JIS-C-5201-1 4.13** RCWV*2.5 or Max. overload voltage whichever is lower for 5 seconds
	ΔR±0.2% for Ultra high power rating		
Insulation Resistance	>9999 MΩ		**MIL-STD-202 Method 302** Apply 100V_{DC} for 1 minute
Endurance	ΔR±0.05%	ΔR±0.1%	**MIL-STD-202 Method 108A** 70±2°C, RCWV for 1000 hrs with 1.5 hrs "ON" and 0.5 hrs "OFF"
	ΔR±0.5% for Ultra high power rating		
	0201: >7kΩ →ΔR±0.5% ≦7kΩ→ΔR±0.2%		
Bending Strength	ΔR±0.05%	ΔR±0.1%	**JIS-C-5201-1 4.33** Bending amplitude 3 mm for 60 seconds 2010 2512 sizes: 2 mm Other sizes: 3 mm
Damp Heat with Load(for 0201 size)	ΔR±0.3%		**MIL-STD-202 Method 103B** 40±2°C, 90~95% R.H. RCWV for 1000 hrs with 1.5 hrs "ON" and 0.5 hrs "OFF"
Solderability	95% min. coverage		**MIL-STD-202 Method 208H** 245±5°C for 3 seconds
Resistance to Soldering Heat	ΔR±0.05%	ΔR±0.1%	**MIL-STD-202 Method 210E** 260±5°C for 10 seconds
Dielectric Withstand Voltage	By Type		**MIL-STD-202 Method 301** Max. overload voltage for 1 minute
Low Temperature Operation	ΔR±0.05%	ΔR±0.2%	**JIS-C-5201-1 4.36** 1 hour, -65°C, followed by 45 minutes of RCWV
	ΔR±0.5% for high power & Ultra Power rating		
High Temperature Exposure	ΔR±0.5% 0402 ≧255.01K 0603 ≧402.01K 0805 ≧1.01M 1206 ≧1.01M 1210 ≧1.01M 2010 ≧1.01M 2512 ≧1.01M ΔR±0.2% for the other		**MIL-STD-202 Method 108** at +155°C for 1000 hrs
Temperature Cycling	ΔR±0.2% (0201 product is excluded)		**JESD22 Method JA-104** -55°C to +125°C, 1000 cycles
ESD	ΔR±0.5% (0201 product is excluded)		**AEC-Q200-002** Human body model AR02 AR03 200V AR05 AR06 1000V AR10、AR12、AR13 2000V
Sulfur Test	ΔR±2% (0201 product is excluded)		**ASTM-B-809-95 Modified** 105±2 °C no power rating for **1000** hrs.
Biased Humidity	ΔR±0.1% (0201 product is excluded)		**MIL-STD-202 Method 103** 1000 hrs 85°C/85%RH 10% of operating power.

RCWV(Rated continuous working voltage)= $\sqrt{(P*R)}$ or Max. Operating voltage whichever is lower

■ **Storage Temperature: 15~28°C; Humidity < 80%RH**

■ **Shelf Life: 2 years from production date.**

Downloaded from Arrow.com.

■Soldering Condition(IPC/JEDEC J-STD-020)

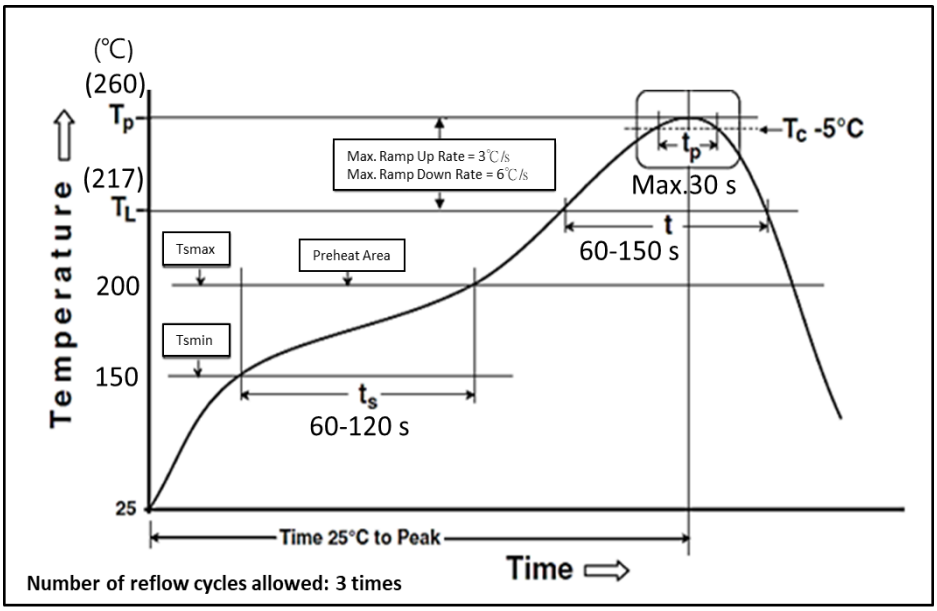

Reflow Profiles	
Profile Feature	**Pb-Free Assembly**
Preheat Min. Temperature (T_{smin}) Max Temperature (T_{smax}) Preheating time (t_s) from (T_{smin} to T_{smax})	 150 °C 200 °C 60-120 seconds
Ramp-up rate (T_L to Tp)	3 °C/second max.
Liquidous temperature (T_L) Time (t_L) maintained above T_L	217 °C 60-150 seconds
Min. Peak temperature (Tp min)	235°C
Max. Peak temperature (Tp max)	260°C
Time (tp) within 5 °C of the specified classification temperature (Tc)	30 seconds max.
Ramp-down rate (Tp to T_L)	6 °C/second max.
Time 25 °C to peak temperature	8 minutes max.

Downloaded from Arrow.com.

■Marking

0603 3digit marking

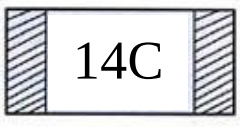

3digit marking for Example: 14C=13K7Ω 13C=13K3Ω

68B=4K99Ω 68X=49.9Ω

Marking Table

Code	E96	Code	E96	Code	E96	Code	E96
01	100	**25**	178	**49**	316	**73**	562
02	102	**26**	182	**50**	324	**74**	576
03	105	**27**	187	**51**	332	**75**	590
04	107	**28**	191	**52**	340	**76**	604
05	110	**29**	196	**53**	348	**77**	619
06	113	**30**	200	**54**	357	**78**	634
07	115	**31**	205	**55**	365	**79**	649
08	118	**32**	210	**56**	374	**80**	665
09	121	**33**	215	**57**	383	**81**	681
10	124	**34**	221	**58**	392	**82**	698
11	127	**35**	226	**59**	402	**83**	715
12	130	**36**	232	**60**	412	**84**	732
13	133	**37**	237	**61**	422	**85**	750
14	137	**38**	243	**62**	432	**86**	768
15	140	**39**	249	**63**	442	**87**	787
16	143	**40**	255	**64**	453	**88**	806
17	147	**41**	261	**65**	464	**89**	825
18	150	**42**	267	**66**	475	**90**	845
19	154	**43**	274	**67**	487	**91**	866
20	158	**44**	280	**68**	499	**92**	887
21	162	**45**	287	**69**	511	**93**	909
22	165	**46**	294	**70**	523	**94**	931
23	169	**47**	301	**71**	536	**95**	953
24	174	**48**	309	**72**	549	**96**	976

Code	A	B	C	D	E	F	G	H	X	Y	Z
Multiplier	10^0	10^1	10^2	10^3	10^4	10^5	10^6	10^7	10^{-1}	10^{-2}	10^{-3}

0603 3digit marking for E24 Example: 101=100Ω 102=1KΩ

E24	10	11	12	13	15	16	18	20	22	24	27	30	33	36	39	43	47	51	56	62	68	75	82	91

0805~2512 4digit marking Example

Resistance	100Ω	2.2KΩ	10KΩ	49.9KΩ	100KΩ
marking	1000	2201	1002	4992	1003

Downloaded from Arrow.com.

■Packaging

Packing Quantity & Reel Specifications

Unit :mm

Type	ØA	ØB	ØC	W	T	Paper Tape (EA)	Emboss Plastic Tape (EA)
AR01	178.0±1.0	60.0+1.0	13.5±0.7	9.5±1.0	11.5±1.0	10,000	-
AR02	178.0±1.0	60.0+1.0	13.5±0.7	9.5±1.0	11.5±1.0	10,000	-
AR03	178.0±1.0	60.0+1.0	13.5±0.7	9.5±1.0	11.5±1.0	5,000	-
AR05	178.0±1.0	60.0+1.0	13.5±0.7	9.5±1.0	11.5±1.0	5,000	-
AR06	178.0±1.0	60.0+1.0	13.5±0.7	9.5±1.0	11.5±1.0	5,000	-
AR13	178.0±1.0	60.0±1.0	13.5±0.7	9.5±1.0	11.5±1.0	5,000	-
AR10	178.0±1.0	60.0+1.0	13.5±0.7	13.5±1.0	15.5±1.0	-	4,000
AR12	178.0±1.0	60.0+1.0	13.5±0.7	13.5±1.0	15.5±1.0	-	4,000

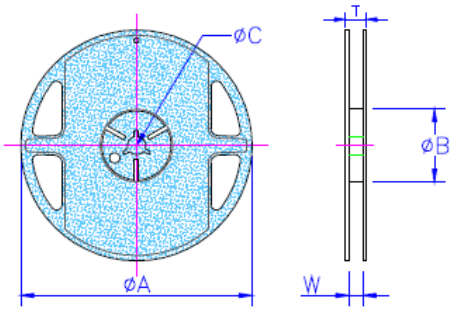

Paper Tape Specifications

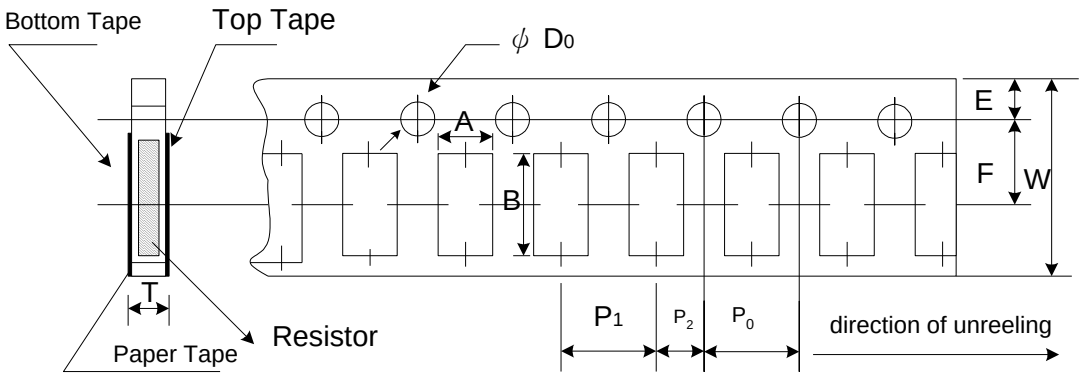

Unit: mm

Type	A	B	W	E	F	P_0	P_1	P_2	$ΦD_0$	T
AR01	0.40±0.05	0.70±0.05	8.00±0.10	1.75±0.05	3.5±0.05	4.00±0.10	2.00±0.05	2.00±0.05	1.55±0.03	0.42±0.02
AR02	0.70±0.05	1.16±0.05	8.00±0.10	1.75±0.05	3.5±0.05	4.00±0.10	2.00±0.05	2.00±0.05	1.55±0.05	0.40±0.03
AR03	1.10±0.05	1.90±0.05	8.00±0.10	1.75±0.05	3.5±0.05	4.00±0.10	4.00±0.10	2.00±0.05	1.55±0.05	0.60±0.03
AR05	1.60±0.05	2.37±0.05	8.00±0.10	1.75±0.05	3.5±0.05	4.00±0.10	4.00±0.10	2.00±0.05	1.55±0.05	0.75±0.05
AR06	2.00±0.05	3.55±0.05	8.00±0.10	1.75±0.05	3.5±0.05	4.00±0.10	4.00±0.10	2.00±0.05	1.55±0.05	0.75±0.05
AR13	2.75±0.05	3.40±0.05	8.00±0.10	1.75±0.05	3.5±0.05	4.00±0.05	4.00±0.10	2.00±0.05	1.60±0.10	0.75±0.05

- ■ Peel force of top cover tape
- ■ The peel speed shall be about 300mm/min±5%
- ■ The peel force of top cover tape shall be between 8gf to 60gf

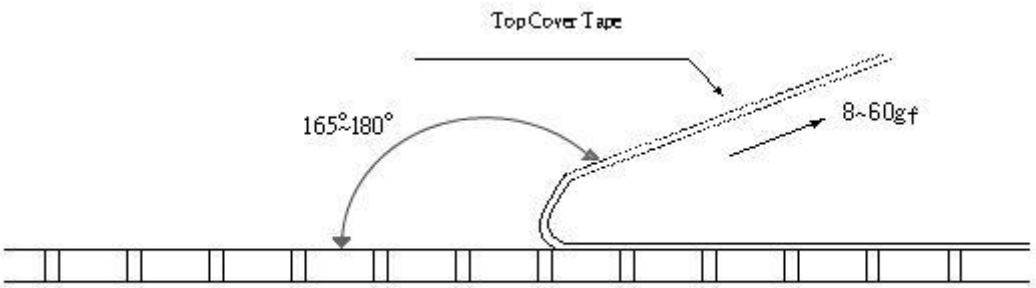

Downloaded from Arrow.com.

Emboss Plastic Tape Specifications

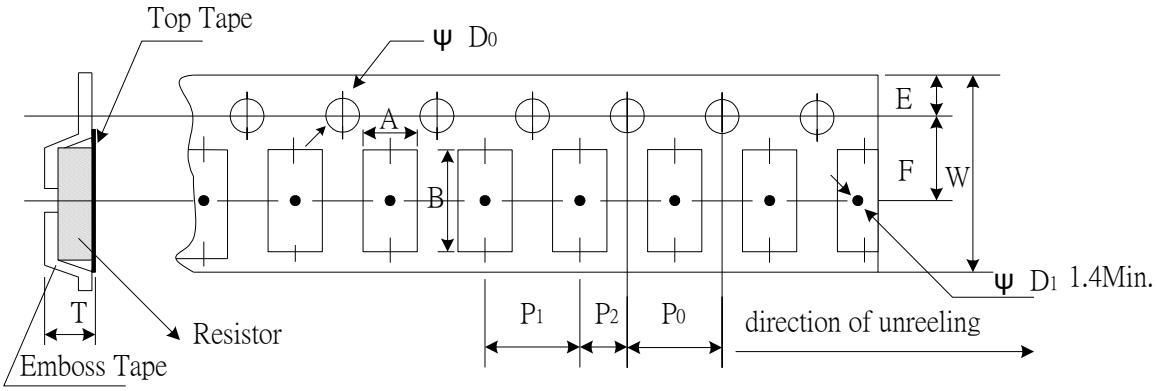

Unit: mm

Type	A	B	W	E	F	P_0	P_1	P_2	$ØD_0$	T
AR10	2.85±0.10	5.45±0.10	12.0±0.10	1.75±0.10	5.5±0.05	4.00±0.05	4.00±0.10	2.00±0.05	1.50+0.10	1.00±0.20
AR12	3.40±0.10	6.65±0.10	12.0±0.10	1.75±0.10	5.5±0.05	4.00±0.05	4.00±0.10	2.00±0.05	1.50+0.10	1.00±0.20

- Peel force of top cover tape
- The peel speed shall be about 300mm/min±5%
- The peel force of top cover tape shall be between 20gf to 80gf

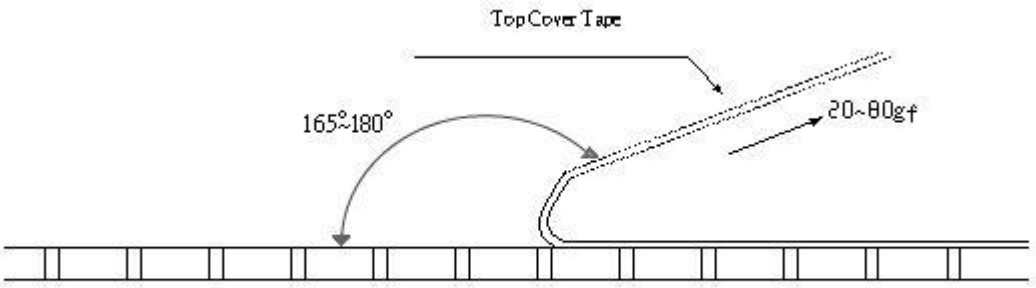

■Recommend Land Pattern

Unit: mm

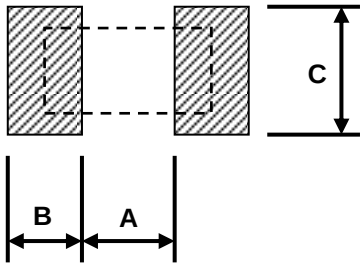

Type	A	B	C
AR01	0.25	0.30	0.40±0.2
AR02	0.50	0.50	0.60±0.2
AR03	0.80	1.00	0.90±0.2
AR05	1.00	1.00	1.35±0.2
AR06	2.00	1.15	1.70±0.2
AR13	2.00	1.15	2.50±0.2
AR10	3.60	1.40	2.50±0.2
AR10(1/2W)	1.00	2.70	2.50±0.2
AR12	4.90	1.60	3.10±0.2
AR12(1W) 1~100Ω	4.90	1.60	3.10±0.2
AR12(1W) 101Ω above	1.00	3.55	3.10±0.2

Downloaded from Arrow.com.

REVISION HISTORY

REVISION	DATE	CHANGE NOTIFICATION	DESCRIPTION
Version D3	Jan. 14, 2013	-	- Add resistance range for Special Electrical and High Power Rating Electrical Specifications. - Adjust the mockup.
Version D4	Apr. 10, 2013	-	- Add "RCWV" description in Environment Characteristic Test Method.
Version D5	Oct. 16, 2013	-	- Increase the resistance range of AR05, TCR15 product.
Version D6	Oct. 17, 2014	-	- Correct the specification of top cover tape peel force. - Update the resistance range of AR05 (Standard) to 4.7Ω -1MΩ
Version D7	Apr. 28, 2015	-	- Add TCR ±2ppm and ±3ppm products specification. - Increase the resistance range of the products below: • AR02 and AR03 of Standard Electrical Specifications. • AR02, AR03 and AR05 of Special Electrical Specifications. - Correct the element of Top Electrode.
Version D8	May. 02, 2016	-	- Modify Storage Temperature.
Version D9	Aug.04, 2016	-	- Update items and requirements of Environmental Characteristics. - Increase the resistance range of Special Electrical Specifications products.
Version E	Dec.14, 2016	-	- Add AR02 High Power Rating Electrical Specifications.
Version E1	Feb. 23, 2017	-	- Increase the resistance range of AR02 Standard Electrical Specifications.
Version E2	Apr. 05, 2017	-	- Add TCR ±1ppm and products specification.
Version E3	Nov.10, 2017	-	- Correct the reference standard in Environmental Characteristics.
Version E4	Dec.26, 2017	-	- Correct the reference standard in Environmental Characteristics.

Downloaded from Arrow.com.

REVISION HISTORY

REVISION	DATE	CHANGE NOTIFICATION	DESCRIPTION
Version E5	Feb. 06, 2018	-	- Correct the reference standard in Environmental Characteristics.
Version E6	Jul. 24, 2018	-	- Update Environment Characteristics item.
Version E7	May. 02,2019	-	- Increase the AR01 0.1% & 0.25% Precision resistance.
Version E8	Oct. 29,2019	-	- Increase the resistance range of Standard, Special and High Power Rating Electrical Specifications.
Version E9	Jan. 07,2020	-	- Define the Dimensions specifications for AR10(1/2W) and AR12(1W). - Add the part number code “N” for 1/20W Power rating. - Extend the resistance range of AR01 (Standard Electrical Specifications). - Add products specifications for AR01(1/20W) and AR10(1/2W). - Update products specifications for AR12(1W). - Define the Recommend Land Pattern for AR10(1/2W) and AR12(1W).
Version F	Apr. 27,2020	-	- Modify the Max. Operating Voltage of AR02 from 25V to 50V. - Modify the Max. Overload Voltage of AR02 from 50V to 100V. - Correct Recommend Land Pattern Dimension A/B of AR10(1/2W) from 0.5mm/2.8mm to 1.00mm/2.70mm.
Version F1	Dec. 08, 2020	-	- Extend the resistance range of AR01 Standard and High Power Rating Electrical Specifications. - Modify the test time of Bending Strength.
Version F2	Jan. 22,2022	-	- Correct the dimension specifications of D2 and land pattern for AR12. - Modify IR reflow profile to comply IPC/JEDEC J-STD-020. - Add shelf life description.

Downloaded from Arrow.com.

REVISION HISTORY

REVISION	DATE	CHANGE NOTIFICATION	DESCRIPTION
Version F3	Feb. 10,2022	-	- Modify the temperature (low temperature) of Derating Curve from 0°C to -55°C.
Version F4	Nov. 10,2023	-	- Resistance range of Standard Electrical: AR06/AR13 0.1%~1% up to 3MΩ. - Resistance range of High Power Electrical: AR05 TCR25/50 0.1%~1% up to 2MΩ. - Resistance range of High Power Electrical: AR06~AR12 TCR25/50 0.1%~1% up to 3MΩ. - Update Reflow Profiles.
Version F5	May. 22,2024	-	- Add AEC-Q200 Compliance and Biased humidity descriptions in Features. -Modify the tolerance of dimension D1 for AR02~AR12. -Add "Ultra" description for AR03~AR12. -Update Environmental Characteristics: • Add the requirement of Ultra high power rating product for Short Time Overload and Endurance Tests. • Only keep AR01 requirement for Damp Heat with Load Test. • Add High Temperature Exposure, Temperature Cycling, ESD, Sulfur and Biased Humidity Tests.

Downloaded from Arrow.com.