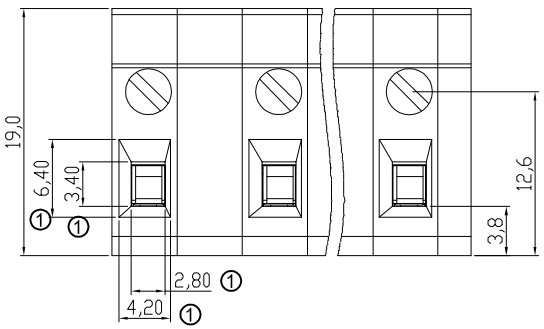


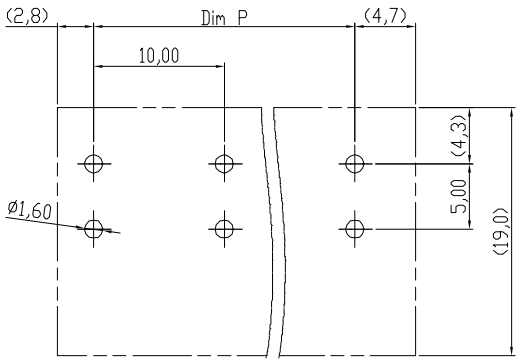


PCB Layout

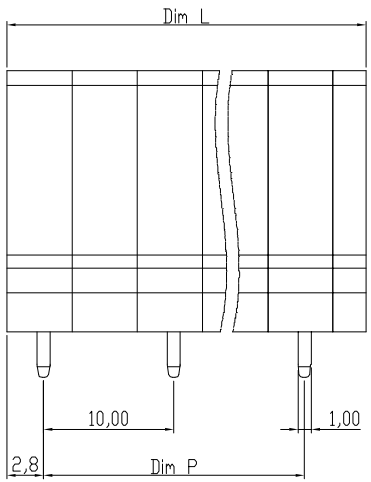


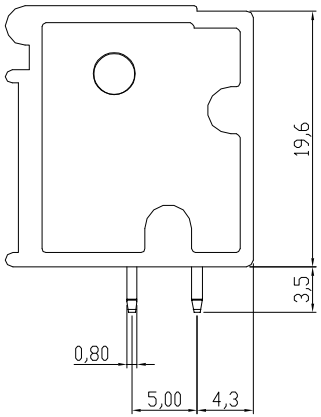


Material

Terminal body: steel stamping clamp Zinc plating
Terminal screw: Steel Zinc plating "-" slot type
Solder pin: Brass,Tin plated
Firm wire chunk: steel Zinc plating
Terminal housing: Thermoplastic (UL94V-0)
GREEN(RAL6018/T)
Terminal cover:Thermoplastic(UL94V-0)
GREEN(RAL6018/T)

Electrical cULus

Voltage rating: 300VAC
Current rating: 20A
Wire range:
Solid wire(AWG): 12-22
Stranded wire(AWG): 12-22
Torque(Lb-In): 2.4
Screw: M2.5
Wire strip length: 10-11mm
Withstanding Voltage: 1.6KV
Operating temperature: -40°C to +115°C
Soldering temperature: 250°C±10°C/5 Sec
Safety Approval: c us

DIMENSION

| | |
|---|---|
| L | Nx10.0-2.5 |
| P | (N-1)x10.0 |

N=Number of poles

| Poles | Tolerance | |
|---|---|---|
| | DIM L | DIM P |
| 2p-4p | ±0.20 | ±0.20 |
| 5p-8p | ±0.30 | ±0.30 |
| 9p-12p | ±0.40 | ±0.40 |

**RoHS compliant**
Unit: mm

① File No.: E349947

| Scale | Free |
|---|---|
| TOLERANCE | |
| X. | ±0.50 |
| X.X | ±0.30 |
| X.XX | ±0.10 |
| DIM | TOL |
| X.° | ±1° |
| | |
| Angle | TOL |

| Id. | Modification | Date | Name |
|---|---|---|---|
| ① | Update to new drawing and add UL | 15.03.2016 | Amy |
| ⓪ | Drawn | 19.04.2010 | Alex |

| | Date | Name |
|---|---|---|
| Drawn | 19.04.2010 | Alex |
| Approved | 15.03.2016 | Amy |

ASSMANN WSW components

Customer-No.

ASSMANN WSW-No.
A-TB100-TRxxV

Drawing-No.
ASS 4100 CO

rev01

Replace

Sheet

Downloaded from Arrow.com.