Half-Bridge Driver

NCV7726A

The NCV7726A is a twelve channel half-bridge driver with protection features designed specifically for automotive and industrial motion control applications. The product has independent controls and diagnostics, and the drivers can be operated in forward, reverse, brake, and high impedance states. The device is controlled via a 16 bit SPI interface and is daisy chain compatible.

Features

- Low Quiescent Current Sleep Mode
- High-Side and Low-Side Drivers Connected in Half-Bridge Configurations
- Integrated Freewheeling Protection (LS and HS)
- 500 mA Typical, 1.1 A Peak Current
- $R_{DS(on)}$ = 0.85 Ω (typ)
- 5 MHz SPI Communication
- 16 Bit Frame Error Detection
- Daisy Chain Compatible with Multiple of 8 bit Devices
- Compliance with 3.3 V and 5 V Systems
- Undervoltage and Overvoltage Lockout
- Discriminated Fault Reporting
- Overcurrent Protection
- Overtemperature Protection
- Low-Side Underload Detection
- Exposed Pad Package
- NCV Prefix for Automotive and Other Applications Requiring Unique Site and Control Change Requirements; AEC−Q100 Qualified and PPAP Capable
- These Devices are Pb-Free, Halogen Free/BFR Free and are RoHS Compliant

Typical Applications

- Automotive
- Industrial
- DC Motor Management for HVAC Application

MARKING DIAGRAM

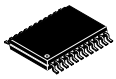

SSOP24 NB EP
CASE 940AK



NCV7726A = Specific Device Code
A = Assembly Location
WL = Wafer Lot
Y = Year
WW = Work Week
G = Pb-Free Package

ORDERING INFORMATION

Device	Package	Shipping†
NCV7726DQAR2G	SSOP24 EP (Pb-Free)	2500/ Tape & Reel

†For information on tape and reel specifications, including part orientation and tape sizes, please refer to our Tape and Reel Packaging Specifications Brochure, BRD8011/D.

© Semiconductor Components Industries, LLC, 2018

Downloaded from Arrow.com.

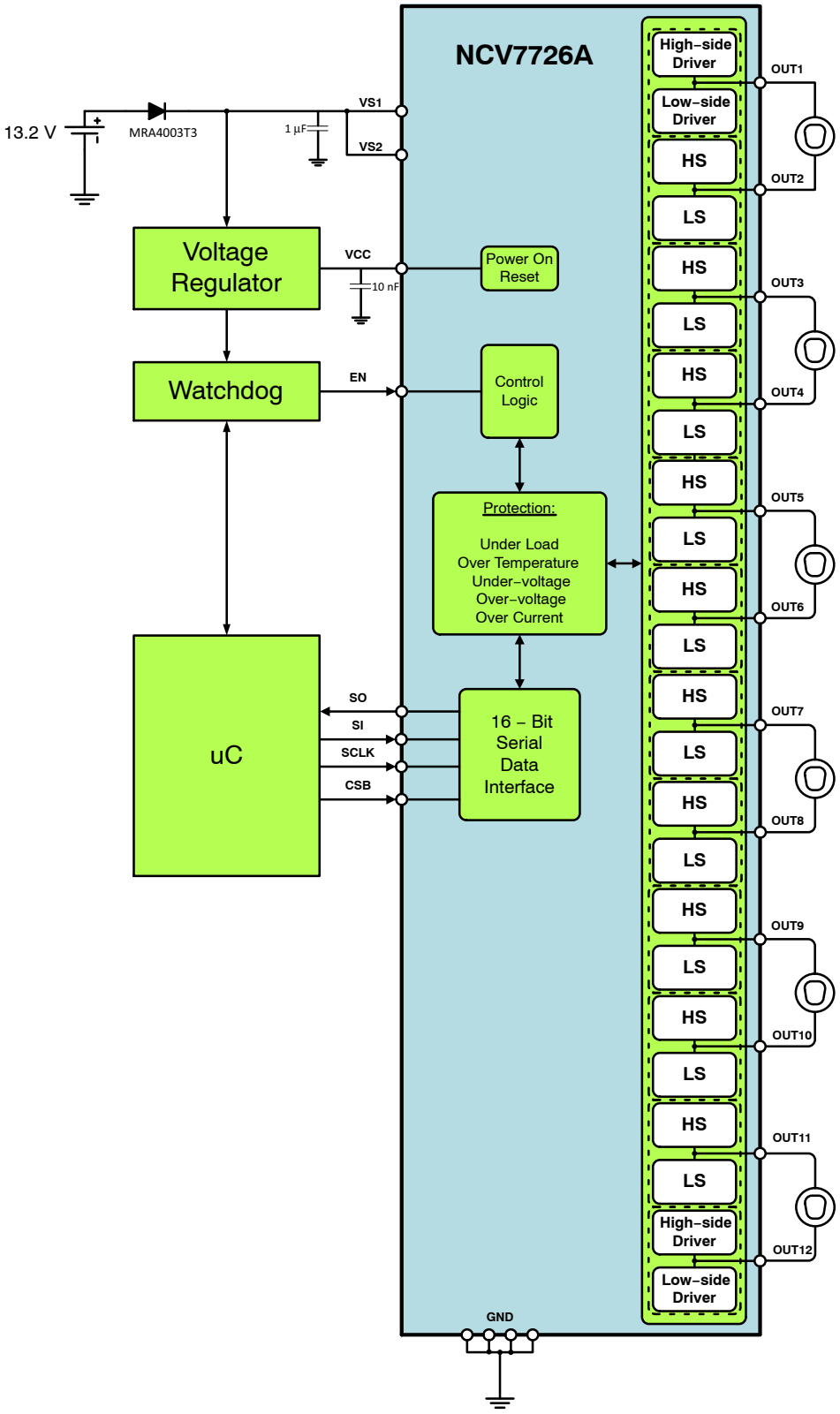

Figure 1. Typical Application

Share Feedback
Your Opinion Matters

Downloaded from Arrow.com.

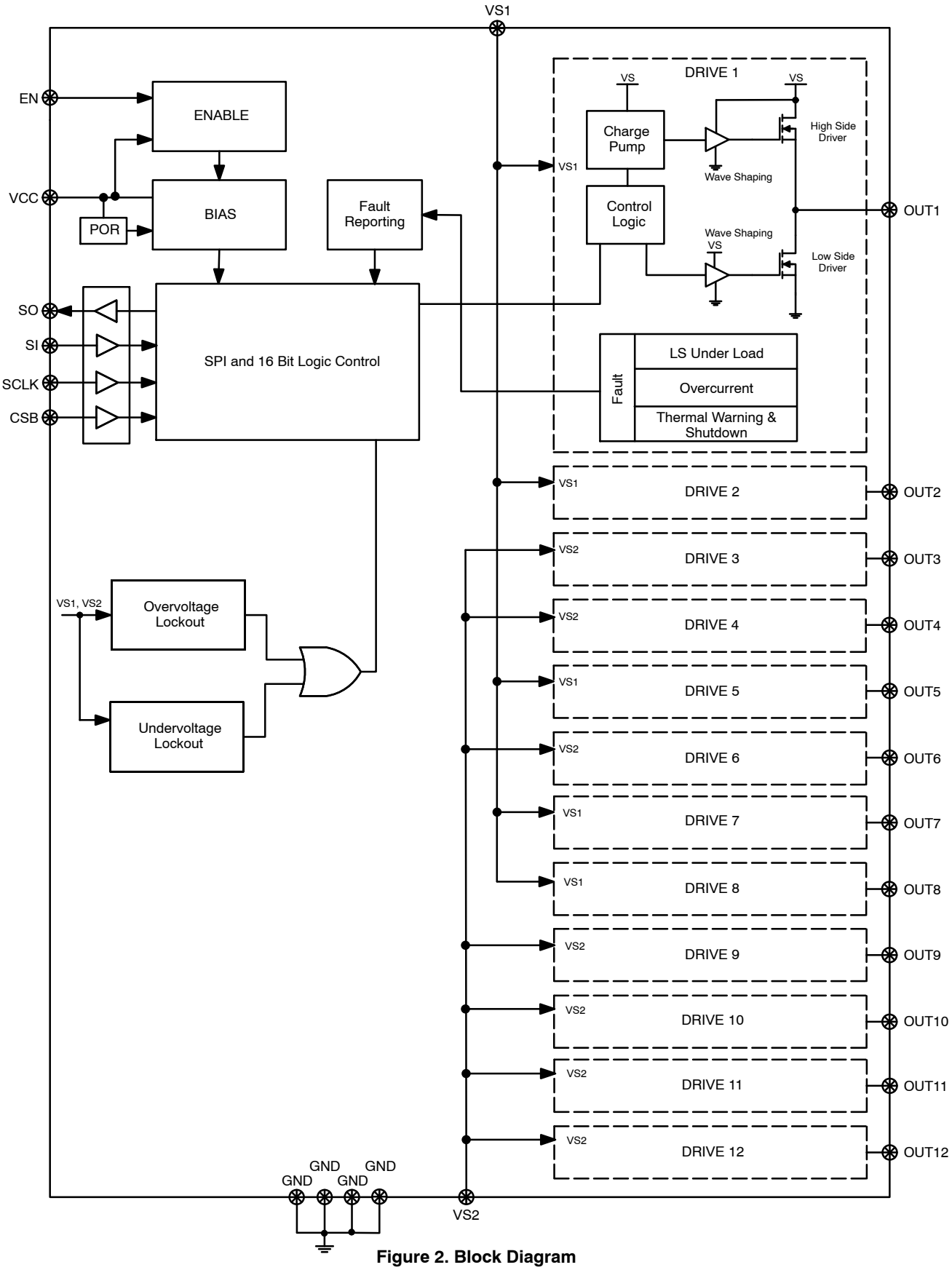

Figure 2. Block Diagram

Share Feedback
Your Opinion Matters

Downloaded from Arrow.com.

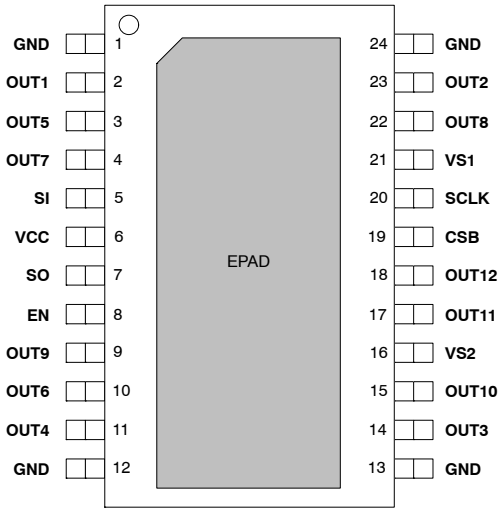

Figure 3. Pinout – SSOP24 NB EP

PIN FUNCTION DESCRIPTION The pin-out for the Half-Bridge Driver in SSOP24 NB EP package is shown in the table below.

Pin# SSOP24	Symbol	Description
1	GND	Ground. Must be connected to other GNDs externally.
2	OUT1	Half-bridge output 1
3	OUT5	Half-bridge output 5
4	OUT7	Half-bridge output 7
5	SI	16 bit serial communication input. 3.3V/5V (TTL) Compatible – internally pulled down.
6	VCC	Power supply input for Logic.
7	SO	16 bit serial communication output. 3.3V/5V Compliant
8	EN	Enable – active high; wakes the device from sleep mode. 3.3V/5V (TTL) Compatible – internally pulled down.
9	OUT9	Half-bridge output 9
10	OUT6	Half-bridge output 6
11	OUT4	Half-bridge output 4
12	GND	Ground. Must be connected to other GNDs externally.
13	GND	Ground. Must be connected to other GNDs externally.
14	OUT3	Half-bridge output 3
15	OUT10	Half-bridge output 10
16	VS2	Power Supply input for outputs 3, 4, 6, 9, 10, 11 and 12. This pin must be connected to VS1 externally.
17	OUT11	Half-bridge output 11
18	OUT12	Half-bridge output 12
19	CSB	Chip select bar – active low; enables serial communication operation. 3.3V/5V (TTL) Compatible – internally pulled up.
20	SCLK	Serial communication clock input. 3.3V/5V (TTL) Compatible – internally pulled down.
21	VS1	Power Supply input for outputs 1, 2, 5, 7, 8. This pin must be connected to VS2 externally.
22	OUT8	Half-bridge output 8
23	OUT2	Half-bridge output 2
24	GND	Ground. Must be connected to other GNDs externally.
EPAD	Exposed Pad	Connect to GND or leave unconnected.

Share Feedback
Your Opinion Matters

Downloaded from Arrow.com.

MAXIMUM RATINGS (Voltages are with respect to GND)

Rating		Symbol	Value	Unit
VSx Pin Voltage	(VS1, VS2) (DC) (AC), t < 500 ms, Ivsx > −2 A	 VSxdcMax VSxac	 −0.3 to 40 −1.0	V
I/O Pin Voltage	(Vcc, SI, SCLK, CSB, SO, EN)	VioMax	−0.3 to 5.5	V
OUTx Pin Voltage	 (DC) (AC) (AC), t< 500 ms, IOUTx > −1.1 A (AC), t< 500 ms, IOUTx < 1 A	 VoutxDc VoutxAc	 −0.3 to 40 −0.3 to 40 −1.0 1.0	V
OUTx Pin Current	(OUT1, ..., OUT12)	IoutxImax	−2.0 to 2.0	A
Junction Temperature Range		T_J	−40 to 150	°C
Storage Temperature Range		Tstr	−55 to 150	°C
Peak Reflow Soldering Temperature: Pb-free 60 to 150 seconds at 217 °C		(Note 1)	260	°C

Stresses exceeding those listed in the Maximum Ratings table may damage the device. If any of these limits are exceeded, device functionality should not be assumed, damage may occur and reliability may be affected.

1. See or download **onsemi**'s Soldering and Mounting Techniques Reference Manual, SOLDERRM/D.

ATTRIBUTES

Characteristic		Symbol	Value	Unit
Short Circuit Reliability Characterization		AECQ10x	Grade A	–
ESD Capability Human Body Model per AEC−Q100−002 All Other Pins Charged Device Model per AEC−Q100−011	 VSx, OUTx	 Vesd4k Vesd2k Vesd750	 ≥ ±4.0 kV ≥ ±2.0 kV ≥ ±750 V	
Moisture Sensitivity Level		MSL	MSL2	–
Package Thermal Resistance − Still-air Junction−to−Ambient Junction−to−Board (Note 2)	 (Note 2)	 $R_{\theta JA}$ $R_{\Psi JBOARD}$	 29.4 10.5	 °C/W °C/W

2. Based on JESD51−7, 1.6 mm thick FR4, 2S2P PCB with 600 mm^2 2 oz. copper and 18 thermal vias to 80x80 mm 1 oz. internal spreader planes. Simulated with each channel dissipating 0.2 W.

RECOMMENDED OPERATING CONDITIONS

Parameter	Symbol	Min	Max	Unit
Digital Supply Input Voltage	VCCOp	3.15	5.25	V
Battery Supply Input Voltage (VS1 = VS2)	VSxOp	5.5	32	V
DC Output Current	IxOp	–	0.5	A
Junction Temperature	TjOp	−40	125	°C

Functional operation above the stresses listed in the Recommended Operating Ranges is not implied. Extended exposure to stresses beyond the Recommended Operating Ranges limits may affect device reliability.

Share Feedback
Your Opinion Matters

Downloaded from Arrow.com.

ELECTRICAL CHARACTERISTICS

(−40 °C ≤ T_J ≤ 150 °C, 5.5 V ≤ VSx ≤ 40 V, 3.15 V ≤ V_{CC} ≤ 5.25 V, EN = V_{CC}, unless otherwise specified.)

Characteristic	Symbol	Conditions	Min	Typ	Max	Unit
POWER SUPPLIES						
Supply Current (VS1 + VS2) Sleep Mode	IqVSx85	VS1 = VS2 = 13.2V, V_{CC} = 0 V −40 °C to 85 °C	–	1.0	2.5	μA
Supply Current (VS1 + VS2) Active Mode	IvsOp	EN = V_{CC}, 5.5V < VSx < 28 V No Load, All Outputs Off	–	2.5	5.0	mA
Supply Current (Vcc) Sleep Mode Active Mode	IqV$_{CC}$ IV$_{CC}$Op	CSB = V_{CC}, EN = SI = SCLK = 0 V −40 °C to 85 °C EN = CSB = V_{CC}, SI = SCLK = 0 V All Outputs Off	– –	1.0 1.5	2.5 3.0	μA mA
Total Sleep Mode Current I(VS1) + I(VS2) + I(VCC)	IqTot	Sleep Mode, −40 °C to 85 °C VS1 = VS2 = 13.2 V, No Load	–	2.0	5.0	μA
VCC Power-on Reset Threshold	V_{CC}por	V_{CC} increasing	–	2.70	2.90	V
VSx Undervoltage Detection Threshold	VSxuv	VSx decreasing	3.5	4.1	4.5	V
VSx Undervoltage Detection Hysteresis	VSxuHys		100	–	450	mV
VSx Overvoltage Detection Threshold	VsXov	VSx increasing	32	36	40	V
VSx Overvoltage Detection Hysteresis	VSxoHys		1	2.5	4	V
DRIVER OUTPUT CHARACTERISTICS						
Output High $R_{DS(on)}$ (source)	R_{DSon}HS	Iout = −500 mA, Vs = 13.2 V V_{CC} = 3.15 V	–	0.85	1.9	Ω
Output Low $R_{DS(on)}$ (sink)	R_{DSon}LS	Iout = 500 mA, Vs = 13.2 V V_{CC} = 3.15 V	–	0.85	1.9	Ω
Source Leakage Current	 IsrcLkg13.2 IsrcLkg28	V_{CC} = 5 V, OUT(1−12) = 0 V, EN = 0/5 V VSx = 13.2 V VSx = 28 V	 −1.0 −2.0	 – –	 – –	 μA μA
Sink Leakage Current	 IsnkLkg13.2 IsnkLkg28	V_{CC} = 5 V, EN = 0/5 V OUT(1−12) = VSx = 13.2 V OUT(1−12) = VSx = 28 V	 – –	 – –	 1.0 2.0	 μA μA
Overcurrent Shutdown Threshold (Source)	IsdSrc	V_{CC} = 5 V, VSx = 13.2 V	−2.0	−1.5	−1.1	A
Overcurrent Shutdown Threshold (Sink)	IsdSnk	V_{CC} = 5 V, VSx = 13.2 V	1.1	1.5	2.0	A
Over Current Delay Timer	TdOc		10	25	50	μs
Underload Detection Threshold (Low Side)	IuldLS	V_{CC} = 5 V, VSx = 13.2 V	–	2.5	5.5	mA
Underload Detection Delay Time	TdUld	V_{CC} = 5 V, VSx = 13.2 V	200	350	600	μs
Body Diode Forward Voltage	IbdFwd	If = 500 mA	–	0.9	1.3	V
DRIVER OUTPUT SWITCHING CHARACTERISTICS						
High Side Turn On Time	ThsOn	Vs = 13.2 V, R_{load} = 70 Ω	–	7.5	13	μs
High Side Turn Off Time	ThsOff	Vs = 13.2 V, R_{load} = 70 Ω	–	3.0	6.0	μs
Low Side Turn On Time	TlsOn	Vs = 13.2 V, R_{load} = 70 Ω	–	6.5	13	μs
Low Side Turn Off Time	TlsOff	Vs = 13.2 V, R_{load} = 70 Ω	–	2.0	5.0	μs
High Side Rise Time	ThsTr	Vs = 13.2 V, R_{load} = 70 Ω	–	4.0	8.0	μs
High Side Fall Time	ThsTf	Vs = 13.2 V, R_{load} = 70 Ω	–	2.0	4.0	μs

Product parametric performance is indicated in the Electrical Characteristics for the listed test conditions, unless otherwise noted. Product performance may not be indicated by the Electrical Characteristics if operated under different conditions.

3. Not production tested.
4. This is the minimum time the user must wait between SPI commands.
5. This is the minimum time the user must wait between consecutive SRR requests.

Share Feedback
Your Opinion Matters

Downloaded from Arrow.com.

ELECTRICAL CHARACTERISTICS (continued)
(−40 °C ≤ T_J ≤ 150 °C, 5.5 V ≤ VSx ≤ 40 V, 3.15 V ≤ V_{CC} ≤ 5.25 V, EN = V_{CC}, unless otherwise specified.)

Characteristic	Symbol	Conditions	Min	Typ	Max	Unit
DRIVER OUTPUT SWITCHING CHARACTERISTICS						
Low Side Rise Time	TlsTr	Vs = 13.2 V, R_{load} = 70 Ω	–	1.0	3.0	μs
Low Side Fall Time	TlsTf	Vs = 13.2 V, R_{load} = 70 Ω	–	1.0	3.0	μs
High Side Off to Low Side On Non-Overlap Time	ThsOffLsOn	Vs = 13.2 V, R_{load} = 70 Ω	1.5	–	–	μs
Low Side Off to High Side On Non-Overlap Time	TlsOffHsOn	Vs = 13.2 V, R_{load} = 70 Ω	1.5	–	–	μs
THERMAL RESPONSE						
Thermal Warning	Twr	(Note 3)	120	140	170	°C
Thermal Warning Hysteresis	TwHy	(Note 3)	–	20	–	°C
Thermal Shutdown	Tsd	(Note 3)	150	175	200	°C
Thermal Shutdown Hysteresis	TsdHy	(Note 3)	–	20	–	°C
LOGIC INPUTS – EN, SI, SCLK, CSB						
Input Threshold High Low	VthInH VthInL		2.0 –	– –	– 0.6	V V
Input Hysteresis – SI, SCLK, CSB	VthInHys		–	150	–	mV
Input Hysteresis – EN	VthENHys		150	400	800	mV
Pull-down Resistance – EN, SI, SCLK	Rpdx	EN = SI = SCLK = V_{CC}	50	125	200	kΩ
Pull-up Resistance – CSB	RpuCSB	CSB = 0 V	50	125	250	kΩ
Input Capacitance	Cinx	(Note 3)	–	–	15	pF
LOGIC OUTPUT – SO						
Output High	VsoH	ISOURCE = −1 mA	V_{CC} − 0.6	–	–	V
Output Low	VsoL	ISINK = 1.6 mA	–	–	0.4	V
Tri-state Leakage	ItriStLkg	CSB = 5 V	−5	–	5	μA
Tri-state Output Capacitance	ItriStCout	CSB = V_{CC}, 0 V < V_{CC} < 5.25 V (Note 3)	–	–	15	pF

Product parametric performance is indicated in the Electrical Characteristics for the listed test conditions, unless otherwise noted. Product performance may not be indicated by the Electrical Characteristics if operated under different conditions.

3. Not production tested.
4. This is the minimum time the user must wait between SPI commands.
5. This is the minimum time the user must wait between consecutive SRR requests.

Share Feedback
Your Opinion Matters

Downloaded from Arrow.com.

ELECTRICAL CHARACTERISTICS (continued)
(−40 °C ≤ T_J ≤ 150 °C, 5.5 V ≤ VSx ≤ 40 V, 3.15 V ≤ V_{CC} ≤ 5.25 V, EN = V_{CC}, unless otherwise specified.)

Characteristic	Symbol	Conditions	Timing Charts #	Min	Typ	Max	Unit
SERIAL PERIPHERAL INTERFACE							
SCLK Frequency	Fclk		–	–	–	5.0	MHz
SCLK Clock Period	TpClk	V_{CC} = 5 V V_{CC} = 3.3 V	–	200 500	– –	– –	ns
SCLK High Time	TclkH		1	85	–	–	ns
SCLK Low Time	TclkL		2	85	–	–	ns
SCLK Setup Time	TclkSup		3, 4	85	–	–	ns
SI Setup Time	TsiSup		11	50	–	–	ns
SI Hold Time	TsiH		12	50	–	–	ns
CSB Setup Time	TcsbSup		5, 6	100	–	–	ns
CSB High Time	TcsbH	(Note 4)	7	5.0	–	–	µs
SO enable after CSB falling edge	TenSo		8	–	–	200	ns
SO disable after CSB rising edge	TdisSo		9	–	–	200	ns
SO Rise/Fall Time	TsoR/F	Cload = 40 pF (Note 3)	–	–	10	25	ns
SO Valid Time	TsoV	Cload = 40 pF (Note 3) SCLK ↑ to SO 50%	10	–	50	100	ns
EN Low Valid Time	TenL	V_{CC} = 5 V; EN H→L 50% to OUTx turning off 50%	–	10	–	–	µs
EN High to SPI Valid	TenHspiV		–	–	–	100	µs
SRR Delay Between Consecutive Frames	Tsrr	(Note 5)	–	150	–	–	µs

Product parametric performance is indicated in the Electrical Characteristics for the listed test conditions, unless otherwise noted. Product performance may not be indicated by the Electrical Characteristics if operated under different conditions.

3. Not production tested.
4. This is the minimum time the user must wait between SPI commands.
5. This is the minimum time the user must wait between consecutive SRR requests.

Share Feedback
Your Opinion Matters

Downloaded from Arrow.com.

CHARACTERISTIC TIMING DIAGRAMS

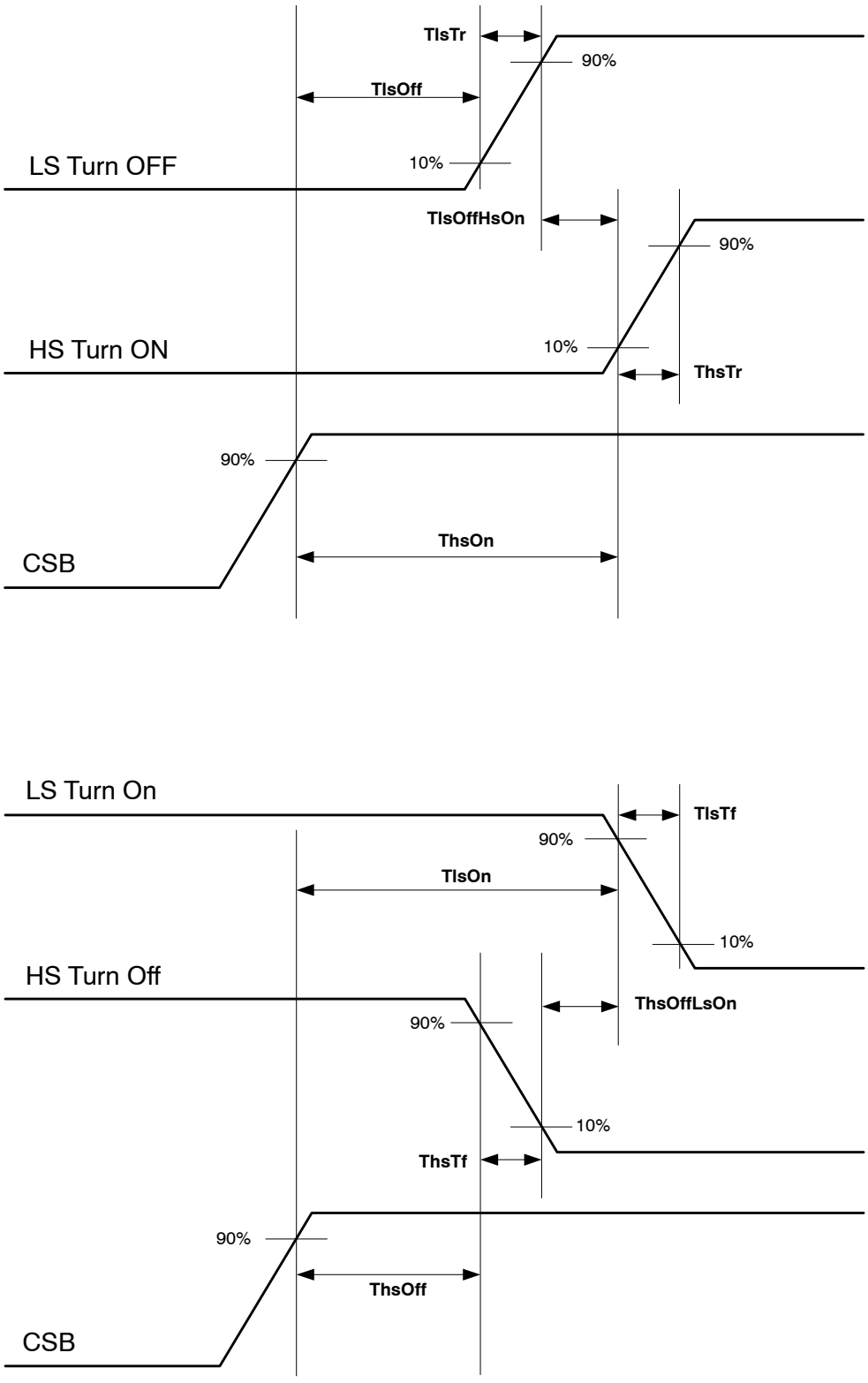

Figure 4. Detailed Driver Timing

Share Feedback
Your Opinion Matters

Downloaded from Arrow.com.

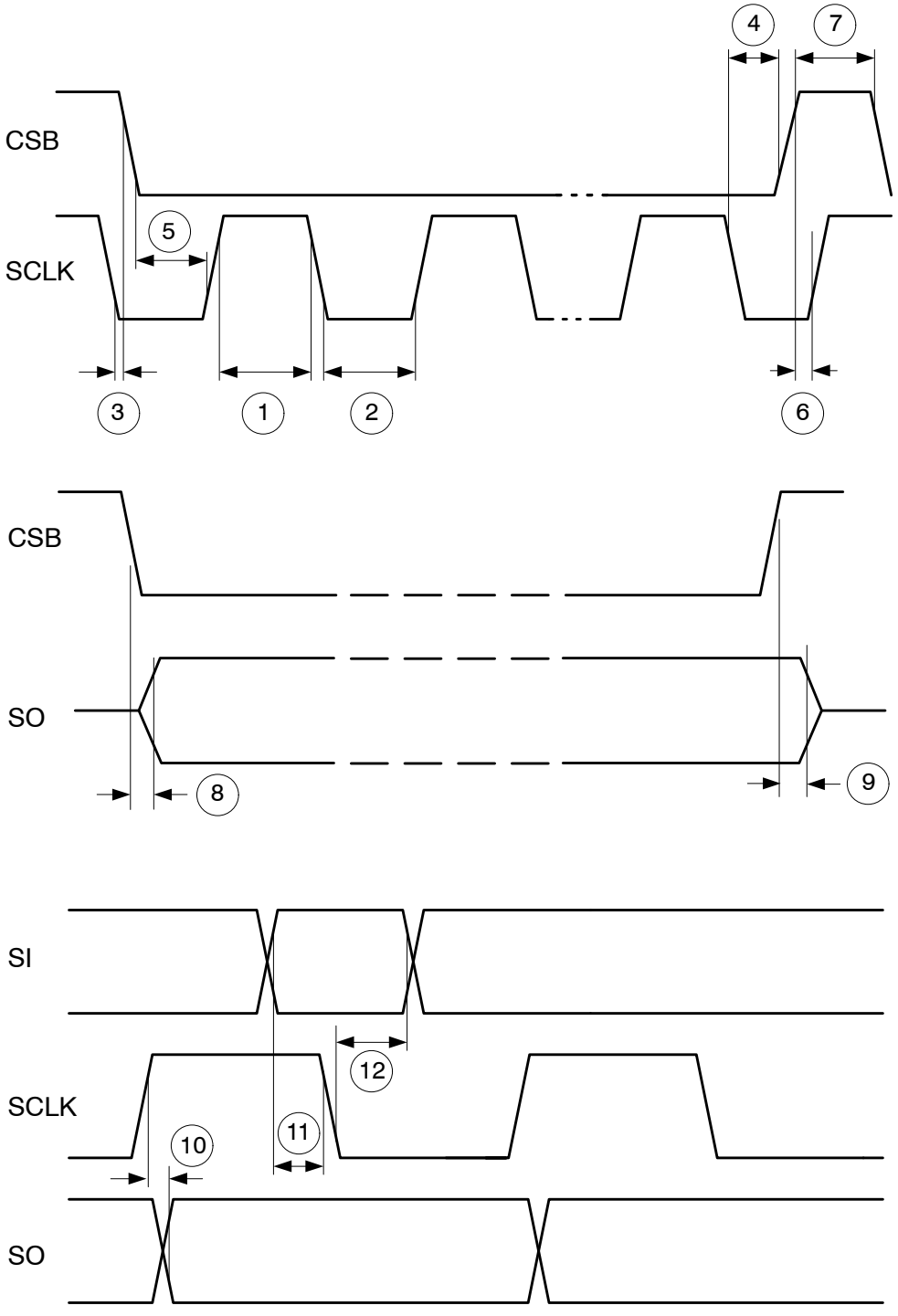

Figure 5. Detailed SPI Timing

Share Feedback
Your Opinion Matters

Downloaded from Arrow.com.

TYPICAL CHARACTERISTICS

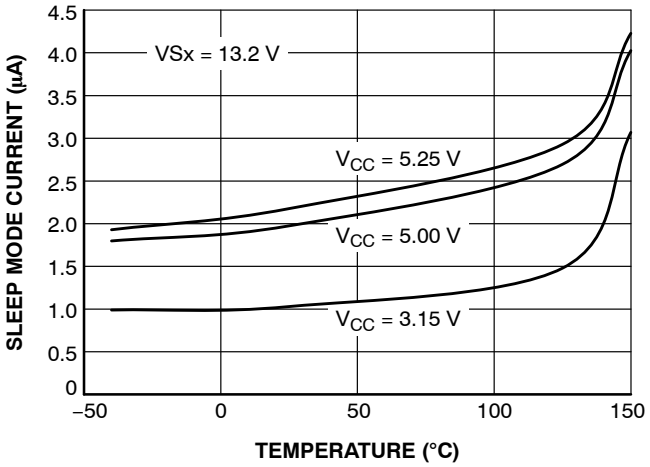

Figure 6. IqTot vs. Temperature

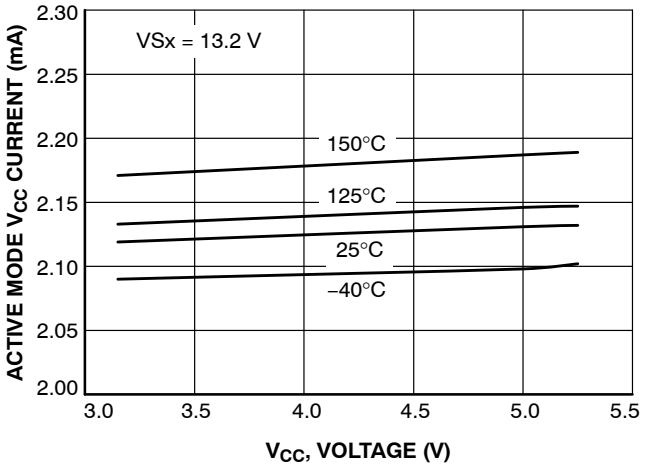

Figure 7. I(V_{CC}) Active Mode vs. V(V_{CC})

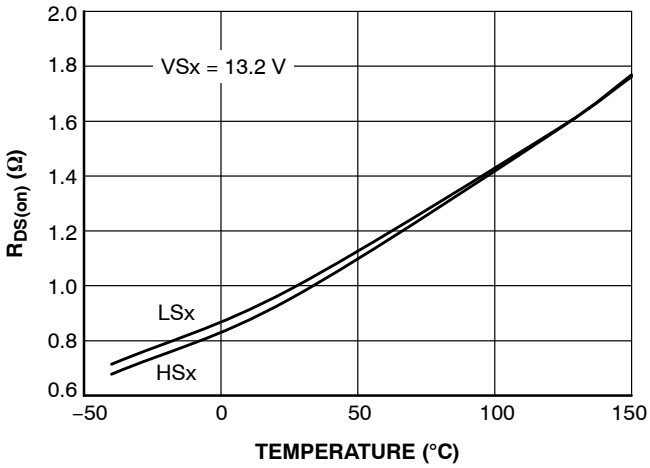

Figure 8. $R_{DS(on)}$ vs. Temperature

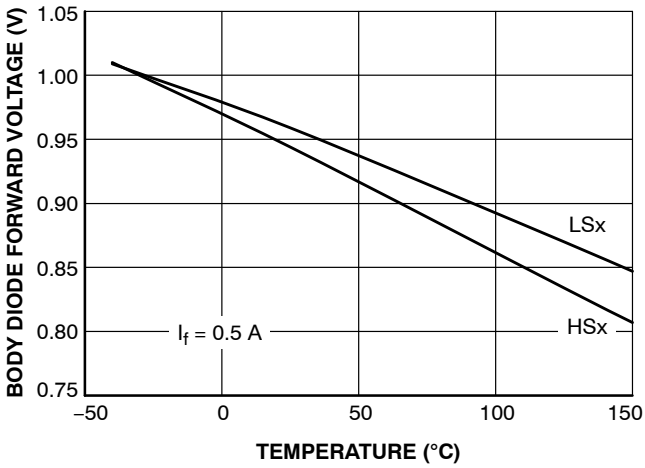

Figure 9. Body Diode Voltage vs. Temperature

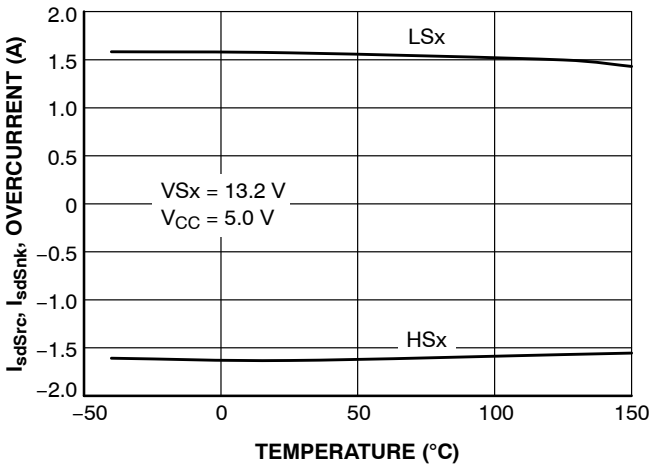

Figure 10. Over Current vs. Temperature

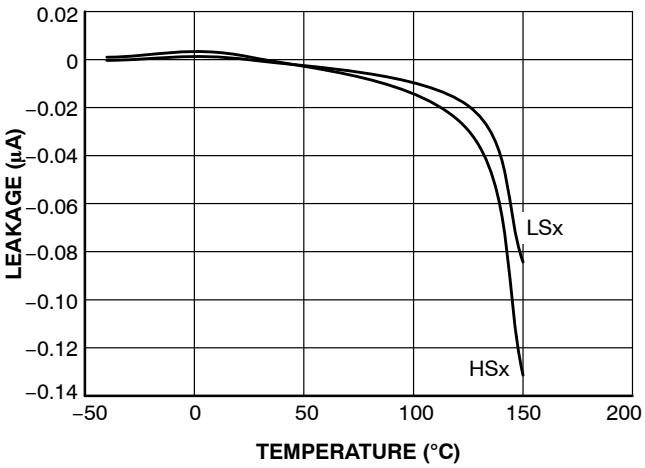

Figure 11. Leakage vs. Temperature

Share Feedback
Your Opinion Matters

Downloaded from Arrow.com.

DETAILED OPERATING DESCRIPTION

General Overview

The NCV7726A is comprised of twenty four NMOS power drivers. The drivers are arranged as twelve half−bridge output channels, allowing for six independent full-bridge configured loads. Output control and status reporting is handled via the SPI (Serial Peripheral Interface) communications port.

Each output is characterized for a typical 0.5 A DC load and has a maximum 2.0 A surge capability (at VSx = 13.2 V). Maximum allowable junction temperature is 150 °C and may constrain the maximum load current and/or limit the number of drivers active at once.

An active-high enable function (EN) allows global control of the outputs and provides a low quiescent current sleep mode when the device is not being utilized. An internal pull-down resistor is provided on the input to ensure the device enters sleep mode if the input signal is lost.

After EN transitions from low to high, the V_{CC} POR cycle will proceed and bring the device into normal operation. The device configuration registers can then be programmed via SPI. Bringing EN low clears all registers (no configuration or status data is stored), disables the drivers, and enters sleep mode.

SPI Communication

16−bit full duplex SPI communication has been implemented for device configuration, driver control, and reading the status data. In addition to the 16−bit status data, a pseudo-bit (PRE_15) can also be retrieved from the SO output.

The device must be enabled (EN = H) for SPI communication. The SPI inputs are TTL compatible and the SO output high level is defined by the applied V_{CC}. The active-low CSB input has a pull-up resistor and the remaining inputs have pull-down resistors to bias them to known states when SPI communication is inactive.

The latched thermal shutdown (TSD) status bit PRE_15 is available on SO until the first rising SCLK edge after CSB goes low. The following conditions must be met for a valid TSD read to be captured:

1. SCLK and SI are low before the CSB cycle;
2. CSB transitions from high to low;
3. CSB setup time (TcsbSup: Figure 5, #5) is satisfied.

Figure 12 shows the SPI communication frame format, and Tables 1 and 2 define the command input and diagnostic status output bits.

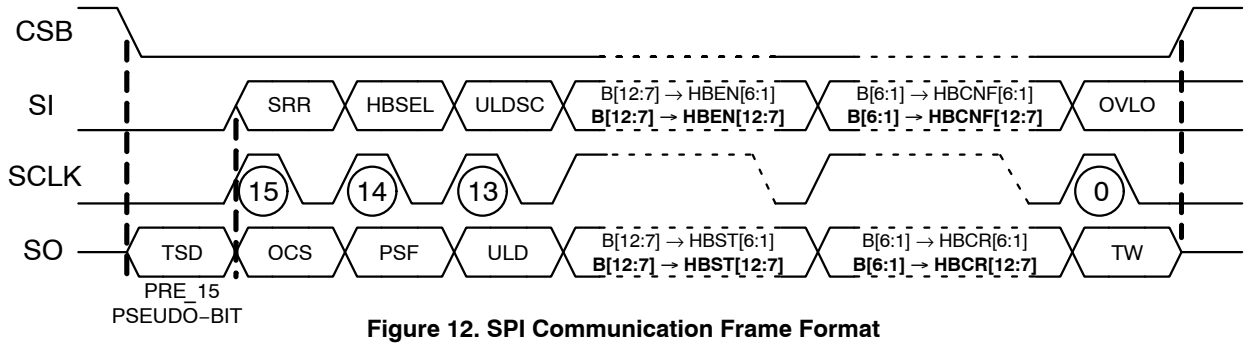

Figure 12. SPI Communication Frame Format

Communication is implemented as follows and is also illustrated in Figures 12 and 14:

1. SI and SCLK are set to low before the CSB cycle.
2. CSB goes low to begin a serial data frame; pseudo-bit PRE_15 is immediately available at SO.
3. SI data is shifted in on every rising edge of SCLK, starting with the most significant bit (MSB), SRR.
4. SI data is recognized on every falling edge of the SCLK.
5. Current SO data is simultaneously shifted out on every rising edge of SCLK, starting with the MSB (OCS).
6. CSB goes high to end the frame and SO becomes tri-state.
7. The last 16 bits clocked into SI are transferred to the device's data register if no frame error is detected, otherwise the entire frame is ignored and the previous input data is preserved.

Share Feedback
Your Opinion Matters

Downloaded from Arrow.com.

Table 1. SPI COMMAND INPUT DEFINITIONS

Channels 12 – 7 (Input Bit # 14 = 1)				
Bit#	**Name**	**Function**	**Status***	**Scope**
15	SRR	Status Register Reset**	1 = Reset	Status Reset per **HBSEL**
14	**HBSEL**	Channel Group Select	**1 = HB [12:7]**	1 = HB [12:7] | 0 = HB [6:1]
13	ULDSC	Underload Shutdown Control	1 = Enabled	Enabled per **HBSEL**; Per Half-Bridge Operation
12	HBEN12	Enable Half-Bridge 12	0 = Hi–Z 1 = Enabled	Per Half-Bridge
11	HBEN11	Enable Half-Bridge 11		
10	HBEN10	Enable Half-Bridge 10		
9	HBEN9	Enable Half-Bridge 9		
8	HBEN8	Enable Half-Bridge 8		
7	HBEN7	Enable Half-Bridge 7		
6	HBCNF12	Configure Half-Bridge 12	0 = LS On, HS Off 1 = LS Off, HS On	Per Half-Bridge
5	HBCNF11	Configure Half-Bridge 11		
4	HBCNF10	Configure Half-Bridge 10		
3	HBCNF9	Configure Half-Bridge 9		
2	HBCNF8	Configure Half-Bridge 8		
1	HBCNF7	Configure Half-Bridge 7		
0	OVLO	VSx Overvoltage Lockout	1 = Enabled	Global Lockout
Channels 6 – 1 (Input Bit # 14 = 0)				
Bit#	**Name**	**Function**	**Status***	**Scope**
15	SRR	Status Register Reset**	1 = Reset	Status Reset per **HBSEL**
14	**HBSEL**	Channel Group Select	**0 = HB [6:1]**	1 = HB [12:7] | 0 = HB [6:1]
13	ULDSC	Underload Shutdown Control	1 = Enabled	Enabled per **HBSEL**; Per Half-Bridge Operation
12	HBEN6	Enable Half-Bridge 6	0 = Hi–Z 1 = Enabled	Per Half-Bridge
11	HBEN5	Enable Half-Bridge 5		
10	HBEN4	Enable Half-Bridge 4		
9	HBEN3	Enable Half-Bridge 3		
8	HBEN2	Enable Half-Bridge 2		
7	HBEN1	Enable Half-Bridge 1		
6	HBCNF6	Configure Half-Bridge 6	0 = LS On, HS Off 1 = LS Off, HS On	Per Half-Bridge
5	HBCNF5	Configure Half-Bridge 5		
4	HBCNF4	Configure Half-Bridge 4		
3	HBCNF3	Configure Half-Bridge 3		
2	HBCNF2	Configure Half-Bridge 2		
1	HBCNF1	Configure Half-Bridge 1		
0	OVLO	VSx Overvoltage Lockout	1 = Enabled	Global Lockout

*All command input bits are set to 0 at V_{CC} power-on reset.
**Latched faults are cleared and outputs can be re-programmed if no fault exists after SRR asserted.

Share Feedback
Your Opinion Matters

Downloaded from Arrow.com.

Table 2. SPI STATUS OUTPUT DEFINITIONS

Channels 12 – 7 (If Previous Input Bit # 14 = 1)				
Bit#	**Name**	**Function**	**Status***	**Scope**
PRE_15	TSD	Latched Thermal Shutdown	1 = Fault	Global Notification; Per Half-Bridge Operation
15	OCS	Latched Overcurrent Shutdown	1 = Fault	Notification per **HBSEL**; Per Half-Bridge Operation
14	PSF	VS1 and/or VS2 Undervoltage or Overvoltage	1 = Fault	Global Notification and Global Operation
13	ULD	Underload Detect	1 = Fault	Notification per **HBSEL**; Per Half-Bridge Operation
12	HBST12	Half-Bridge 12 Output Status	0 = Hi−Z 1 = Enabled	Per Half-Bridge
11	HBST11	Half-Bridge 11 Output Status		
10	HBST10	Half-Bridge 10 Output Status		
9	HBST9	Half-Bridge 9 Output Status		
8	HBST8	Half-Bridge 8 Output Status		
7	HBST7	Half-Bridge 7 Output Status		
6	HBCR12	Half-Bridge 12 Config Status	0 = LS On, HS Off 1 = LS Off, HS On**	Per Half-Bridge
5	HBCR11	Half-Bridge 11 Config Status		
4	HBCR10	Half-Bridge 10 Config Status		
3	HBCR9	Half-Bridge 9 Config Status		
2	HBCR8	Half-Bridge 8 Config Status		
1	HBCR7	Half-Bridge 7 Config Status		
0	TW	Thermal Warning	1 = Fault	Global Notification; Per Half-Bridge Operation

*All status output bits are set to 0 at Vcc power-on reset (POR).
**HBCRx is forced to 0 when HBSTx = 0 via POR, SPI, or fault.

Share Feedback
Your Opinion Matters

Downloaded from Arrow.com.

Table 2. SPI STATUS OUTPUT DEFINITIONS (continued)

Channels 6 – 1 (If Previous Input Bit # 14 = 0)				
Bit#	**Name**	**Function**	**Status***	**Scope**
PRE_15	TSD	Latched Thermal Shutdown	1 = Fault	Global Notification; Per Half-Bridge Operation
15	OCS	Latched Overcurrent Shutdown	1 = Fault	Notification per **HBSEL**; Per Half-Bridge Operation
14	PSF	VS1 and/or VS2 Undervoltage or Overvoltage	1 = Fault	Global Notification and Global Operation
13	ULD	Underload Detect	1 = Fault	Notification per **HBSEL**; Per Half-Bridge Operation
12	HBST6	Half-Bridge 6 Output Status	0 = Hi−Z 1 = Enabled	Per Half-Bridge
11	HBST5	Half-Bridge 5 Output Status		
10	HBST4	Half-Bridge 4 Output Status		
9	HBST3	Half-Bridge 3 Output Status		
8	HBST2	Half-Bridge 2 Output Status		
7	HBST1	Half-Bridge 1 Output Status		
6	HBCR6	Half-Bridge 6 Config Status	0 = LS On, HS Off 1 = LS Off, HS On**	
5	HBCR5	Half-Bridge 5 Config Status		
4	HBCR4	Half-Bridge 4 Config Status		
3	HBCR3	Half-Bridge 3 Config Status		
2	HBCR2	Half-Bridge 2 Config Status		
1	HBCR1	Half-Bridge 1 Config Status		
0	TW	Thermal Warning	1 = Fault	Global Notification; Per Half-Bridge Operation

*All status output bits are set to 0 at Vcc power-on reset (POR).
**HBCRx is forced to 0 when HBSTx = 0 via POR, SPI, or fault.

Frame Error Detection

The NCV7726A employs frame error detection to help ensure input data integrity. SCLK is compared to an *n x 8* bit counter and a valid frame (CSB H-L-H cycle) has integer multiples of 8 SCLK cycles. For the first 16 bits shifted into SI, SCLK is compared to a modulo16 counter (n = 2), and SCLK is compared to a modulo 8 counter (n = 1, 2, ...m) thereafter. This variable modulus facilitates daisy chain operation with devices using different word lengths.

The last 16 bits clocked into SI are transferred to the NCV7726A's data register if no frame error is detected, otherwise the entire frame is ignored and the previous input data is preserved.

Daisy Chain Operation

Daisy chain operation is possible with multiple 16−bit and 8−bit devices that have a compatible SPI protocol. The clock phase and clock polarity with respect to the data for all the devices in the chain must be the same as the NCV7726A.

CSB and SCLK are parallel connected to every device in the chain while SO and SI are series connected between each device.

The master's MOSI is connected to the SI of the first device and the first device's SO is connected to the next device's SI. The SO of the final device in the chain is connected to the master's MISO.

The hardware configuration for the NCV7726A daisy chained with an 8− bit SPI device is shown in Figure 13. A 24−bit frame made of 16−bit word 'A' and 8−bit word 'B' is sent from the master. Command word B is sent first followed by word A. The master simultaneously receives status word B first followed by word A. The progression of data from the MCU through the sequential devices is illustrated in Figure 14.

Compliance with the illustrated frame format is required for proper daisy chain operation. Situations should be avoided where an incorrect multiple of 8 bits is sent to the devices, but the frame length does not cause a frame error in the devices. For example, the word order could be inadvertently interleaved or reversed. Invalid data is accepted by the NCV7726A in such scenarios and possibly by other devices in the chain, depending on their frame error implementation. Data is received as a command by the device at the beginning of the chain, but the device at the end of the chain may receive status data from the preceding device as a command.

Share Feedback
Your Opinion Matters

Downloaded from Arrow.com.

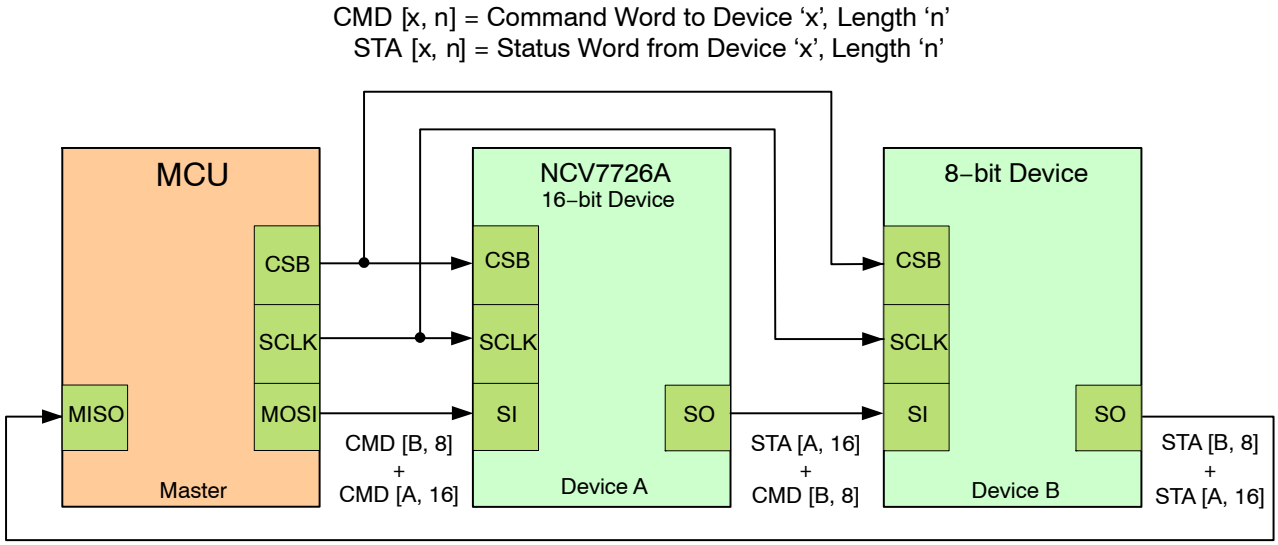

Figure 13. Daisy Chain Configuration

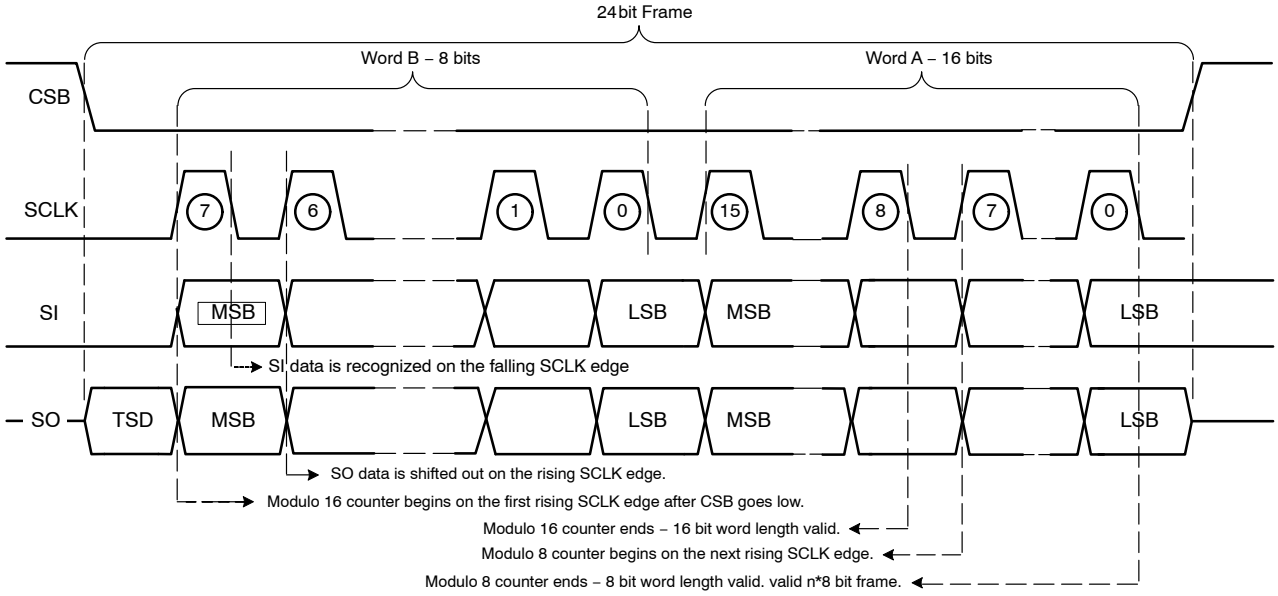

Figure 14. Daisy Chain – 24 bit Frame Format

TSD Bit in Daisy Chain Operation

The SO path is designed to allow TSD status retrieval in a daisy chain configuration using NCV7726A or other devices with identical SPI functionality. The TSD status bit is OR’d with SI and then multiplexed with the device’s usual status data (Figure 15).

CSB is held high and SI and SCLK are held low by the master before the start of the SPI frame. TSD status is immediately available as bit PRE_15 at SO (SO = TSD) when CSB goes low to begin the frame. The usual status data (SO = STA) becomes available after the first rising SCLK edge.

The TSD status automatically propagates through the chain from the SO output of the previous device to the SI input of the next. This is shown in Figures 16 and 17, first without a TSD fault in either device (Figure 16), and then subsequently with a latched TSD fault (TSD = 1) in device “A” propagating through to device “B” (Figure 17).

Since the TSD status of any device propagates automatically through the entire chain, it is not possible to determine which device (or devices) has a fault (TSD = 1). The usual status data from each device will need to be examined to determine where a fault (or faults) may exist.

Share Feedback
Your Opinion Matters

Downloaded from Arrow.com.

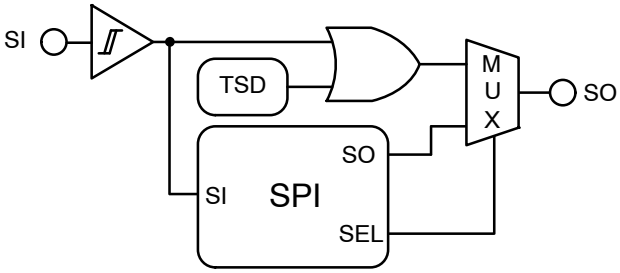

Figure 15. TSD SPI Link

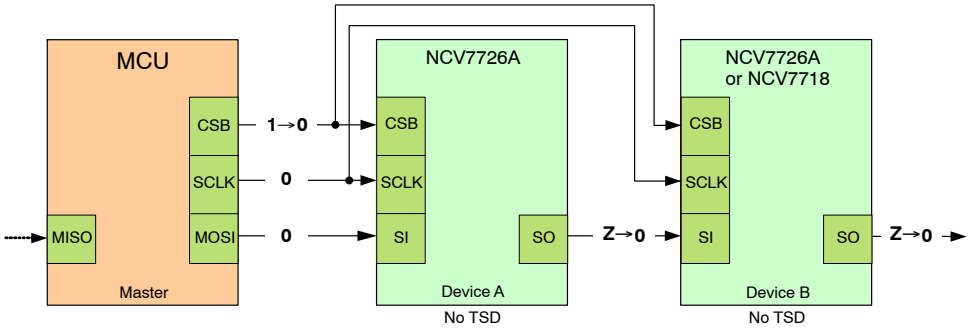

Figure 16. Daisy Chain Without TSD Fault

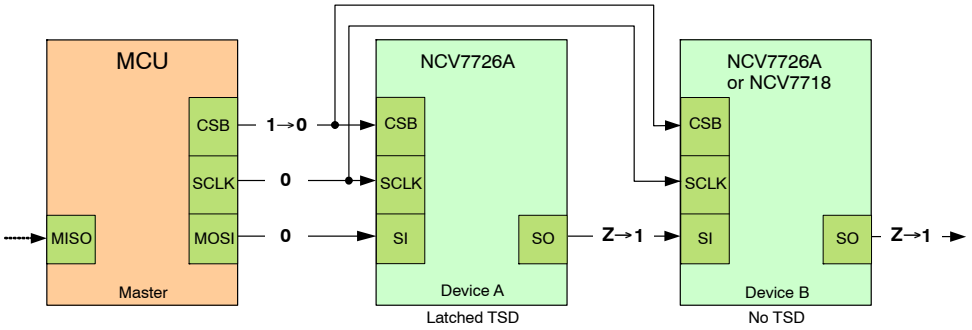

Figure 17. Daisy Chain With TSD Fault

Power Up/Down Control

The V_{CC} supply input powers the device's logic core. A V_{CC} power-on reset (POR) function provides controlled power-up/down. V_{CC} POR initializes the command input and status output registers to their default states (0x00), and ensures that the bridge output and SO drivers maintain Hi-Z as power is applied. SPI communication and normal device operation can proceed once V_{CC} rises above the POR threshold and EN remains high.

The VS1 and VS2 supply inputs power their respective output drivers (refer to Figure 2 and the PIN FUNCTION DESCRIPTION). The VSx inputs are monitored to ensure that the supply stays within the recommended operating range. If the VSx supply moves into either of the VS undervoltage or overvoltage regions, the output drivers are switched to Hi-Z but command and status data is preserved. Output drivers will remain on if OVLO = 0 during an overvoltage condition.

Driver Control

The NCV7726A has the flexibility to control each half-bridge driver channel via SPI. Actual driver output state is determined by the command input and the current fault status bits as shown in Figure 18 and Table 3.

The channels are divided into two groups and each group is selected by the HBSEL input bit (see Table 1). High-side (HSx) and low-side (LSx) drivers of the same channel cannot be active at the same time, and non-overlap delays are imposed when switching between HSx and LSx drivers in the same channel. This control design thus prevents current shoot-through.

After the device has powered up and the drivers are allowed to turn on, the drivers remain on until commanded off via SPI or until a fault condition occurs.

Share Feedback
Your Opinion Matters

Downloaded from Arrow.com.

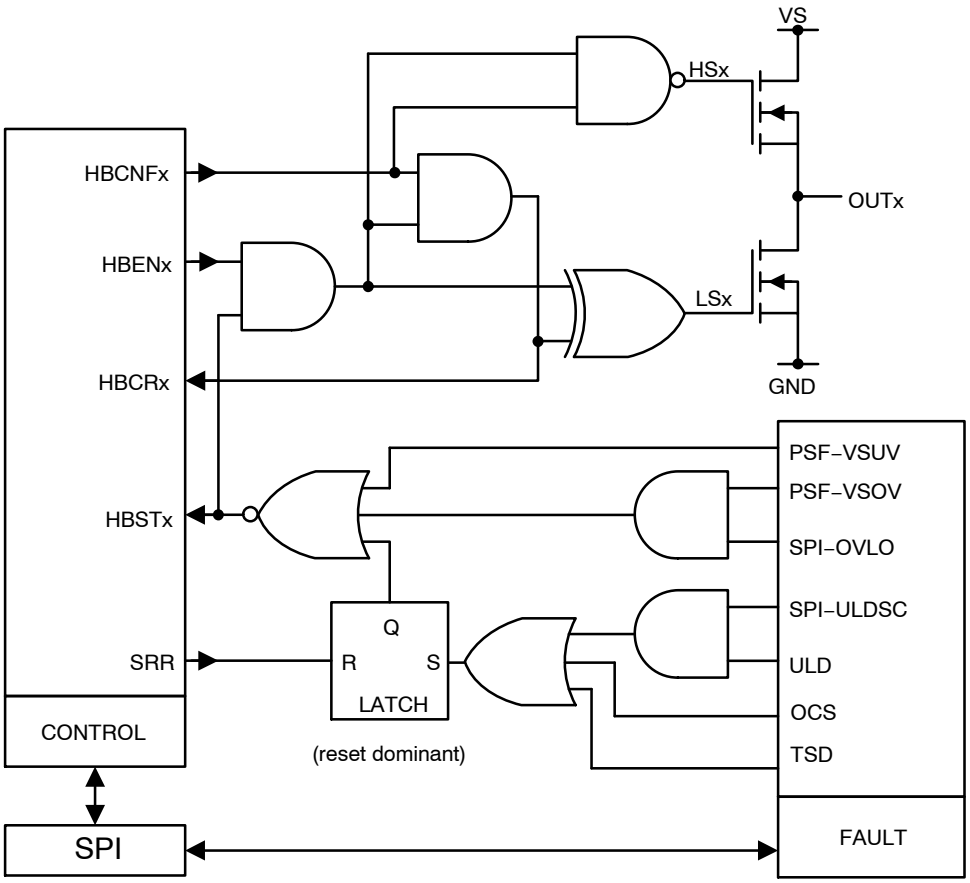

Figure 18. Simplified Half-Bridge Control Logic

Table 3. OUTPUT STATE VS. COMMAND AND STATUS

Command		Status		
HBENx	**HBCNFx**	**HBSTx**	**HBCRx**	**OUTx**
X	X	0	0	Z
0	X	0	0	Z
1	0	1	0	GND
1	1	1	1	VS

Share Feedback
Your Opinion Matters

Downloaded from Arrow.com.

DIAGNOSTICS, PROTECTIONS, STATUS REPORTING AND RESET

Overview

The NCV7726A employs diagnostics designed to prevent destructive overstress during a fault condition. Diagnostics are classified as either supervisory or protection functions (Table 4). Supervisory functions provide status information about device conditions. Protection functions provide status information and activate fault management behaviors.

Diagnostics resulting in output shutdown and latched status may depend on a qualifier and may require user intervention for output recovery and status memory clear. Diagnostics resulting in output lockout and non-latched status (VSOV or VSUV) may recover and clear automatically. Output configurations can be changed during output lockout. Outputs assume the new configurations or resume the previous configurations when an auto-recover fault is resolved. Table 5 shows output states during faults and output recovery modes, and Table 6 shows the status memory and memory clear modes.

Table 4. DIAGNOSTIC CLASSES AND FUNCTIONS

Name	Class	Function
TSD	Protection	Thermal Shutdown
OCS	Protection	Overcurrent Shutdown
PSF	Protection	Under/overvoltage Lockout (OVLO = 1)
ULD	Protection	Underload Shutdown
HBSTX	Supervisory	Half-Bridge X Output Status
HBCRX	Supervisory	Half-Bridge X Config Status
TW	Supervisory	Thermal Warning

Table 5. OUTPUT STATE VS. FAULT AND OUTPUT RECOVERY

Fault	Qualifier	OUTx State	OUTx Recovery	OUTx Recovery Scope
TSD	–	→Z	Send SRR	Per HBSEL
OCS	–	→Z	Send SRR	Per HBSEL
PSF – VSOV	OVLO = 1	→Z→Y_n | Y_{n+1}	Auto*	All Outputs
	OVLO = 0	Unaffected	–	–
PSF – VSUV	–	→Z→Y_n | Y_{n+1}	Auto*	All Outputs
ULD	ULDSC = 1	→Z	Send SRR	Per HBSEL
	ULDSC = 0	Unaffected	–	–
TW	–	Unaffected	–	–

*OUTx returns to its previous state (Y_n) or new state (Yn+1) if fault is removed.

Table 6. STATUS MEMORY VS. FAULT AND MEMORY CLEAR

Fault	Qualifier	Status Memory	Memory Clear	Memory Clear Scope
TSD	–	Latched	Send SRR	Per HBSEL
OCS	–	Latched	Send SRR	Per HBSEL
PSF – VSOV	OVLO = X	Non-Latched	Auto*	Global
PSF – VSUV	–	Non-Latched	Auto*	Global
ULD	ULDSC = X	Latched	Send SRR	Per HBSEL
TW	–	Non-Latched	Auto*	Global

*Status memory returns to its no-fault state if fault is removed.

Share Feedback
Your Opinion Matters

Downloaded from Arrow.com.

Status Information Retrieval

Current status information as selected by HBSEL is retrieved during each SPI frame. To preserve device configuration and output states, the previous SI data pattern must be sent during the status retrieval frame.

Status information is prevented from being updated during a SPI frame but new status becomes available after CSB goes high at the end of the frame provided the frame did not contain an SRR request. For certain device faults, it may not be possible to determine which channel (or channels) has a particular fault (or faults) since notification may be via a single global status bit. The complete status data from all channels may need to be examined to determine where a fault may exist.

Status Register Reset – SRR

Sending SRR = 1 clears status memory and re−activates faulted outputs for channels as selected by HBSEL. The previous SI data pattern must be sent with SRR to preserve device configuration and output states. SRR takes effect at the rising edge of CSB and a timer (Tsrr) is started. Tsrr is the minimum time the user must wait between consecutive SRR requests. If a fault is still present when SRR is sent, protection can be re−engaged and shutdown will recur. The status registers can also be reset by toggling the EN pin or by VCC power−on reset.

Diagnostics Details

The following sections describe individual diagnostics and behaviors. In each description and illustration, a SPI frame is assumed to always be valid and the SI data pattern sent for HBCNFx and HBENx is the same as the previous frame. Actual results can depend on asynchronous fault events and SPI clock frequency and frame rate.

Undervoltage Lockout

Global Notification, Global Operation

Undervoltage detection and lockout control is provided by monitoring the VS1, VS2 and V_{CC} supply inputs. Undervoltage hysteresis is provided to ensure clean detection transitions. Undervoltage timing is shown in Figure 19.

Undervoltage at either VSx input turns off all outputs and sets the power supply fail (PSF) status bit. The outputs return to their previously programmed state and the PSF status bit is cleared when VSx rises above the hysteresis voltage level. SPI is available and programmed output enable and configuration states are maintained if proper V_{CC} is present during VSx undervoltage. V_{CC} undervoltage turns all outputs off and clears the command input and status output registers.

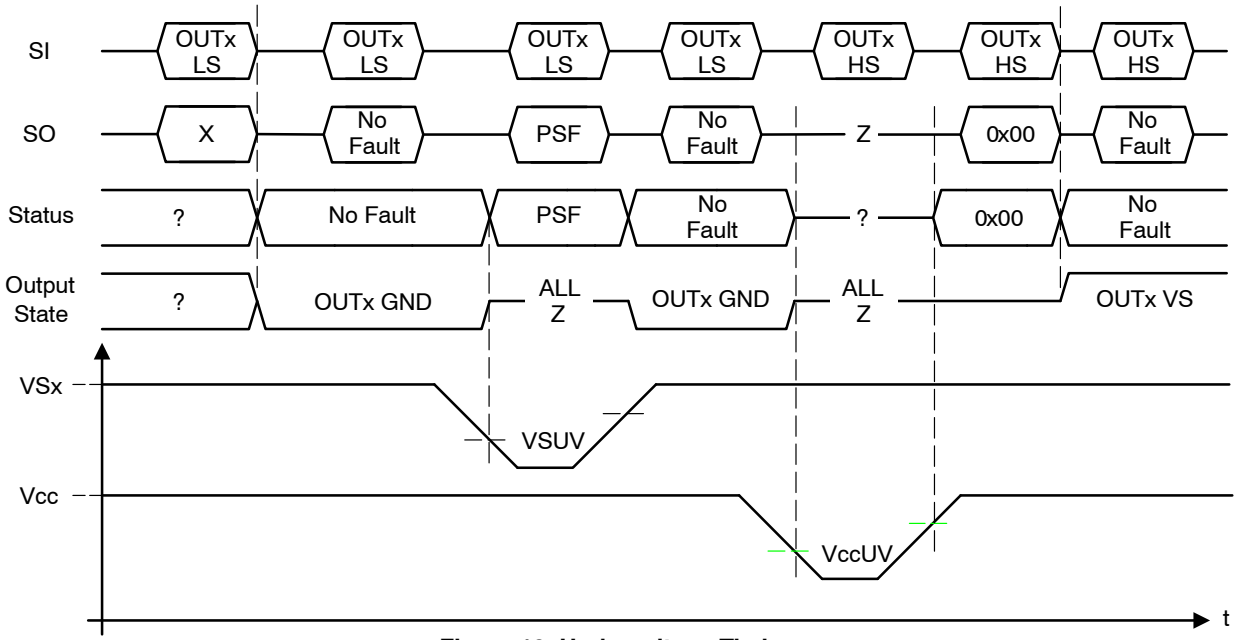

Figure 19. Undervoltage Timing

Share Feedback
Your Opinion Matters

Downloaded from Arrow.com.

Overvoltage Lockout

Global Notification, Global Operation

Overvoltage detection and lockout control is provided by monitoring the VS1 and VS2 supply inputs. Overvoltage hysteresis is provided to ensure clean detection transitions. Overvoltage timing is shown in Figure 20.

Overvoltage at either VSx input turns off all outputs if the overvoltage lockout input bit is set (OVLO = 1, HBSEL = X), and sets the power supply fail (PSF) status bit (see Tables 5 and 6). The outputs return to their previously programmed state and the PSF status bit is cleared when VSx falls below the hysteresis voltage level.

To reduce stress, it is recommended to operate the device with OVLO bit asserted to ensure that the drivers turn off during a load dump scenario.

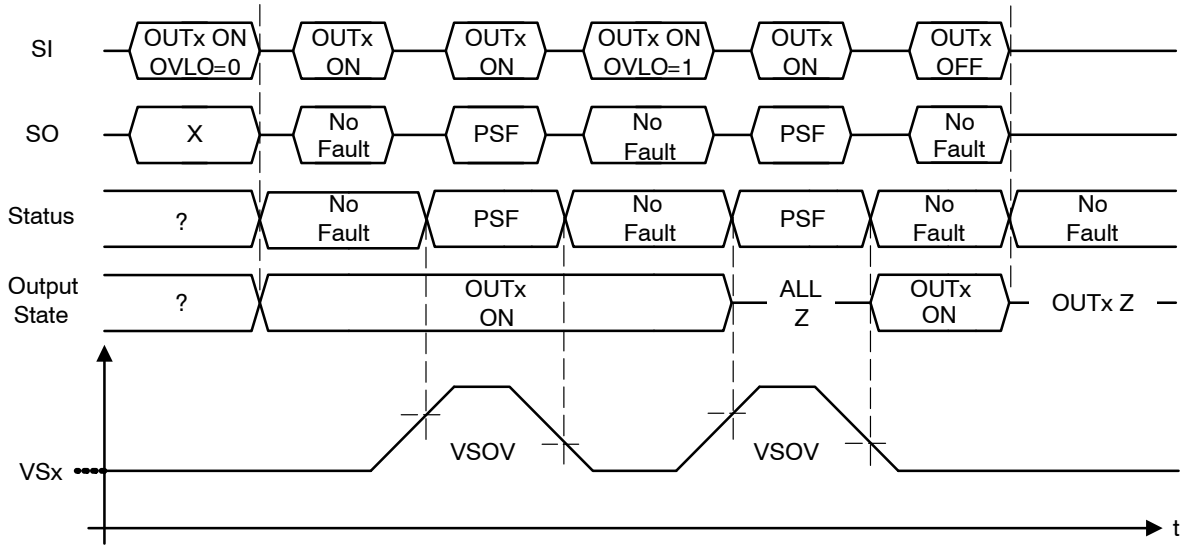

Figure 20. Overvoltage Timing

Overcurrent Shutdown

Global Notification per HBSEL, Per Half-Bridge Operation

Overcurrent detection and shutdown control is provided by monitoring each HS and LS driver. Overcurrent timing is shown in Figure 21. Overcurrent in either driver starts a channel's overcurrent delay timer. If overcurrent exists after the delay, both drivers are latched off and the overcurrent (OCS) status bit is set. The OCS bit is cleared and channels are re−activated by sending SRR = 1. The channel group select (HBSEL) input bit determines which channels are affected by SRR.

A persistent overcurrent cause should be resolved prior to re−activation to avoid repetitive stress on the drivers. Extended exposure to stress may affect device reliability.

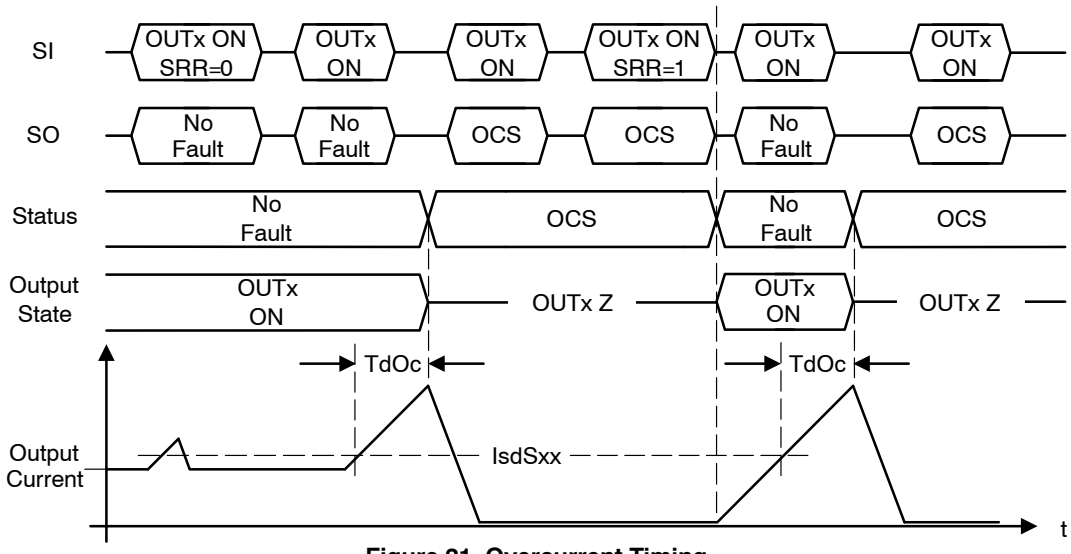

Figure 21. Overcurrent Timing

Share Feedback
Your Opinion Matters

Downloaded from Arrow.com.

Underload Shutdown

Global Notification per HBSEL, Shutdown Control per HBSEL, Per Half-Bridge Operation

Underload detection and shutdown control is provided by monitoring each LS driver. Underload timing is shown in Figure 22. Underload at a LS driver starts the global underload delay timer. If underload occurs in another channel after the global timer has been started, the delay for any subsequent underload will be the remainder of the timer. The timer runs continuously with a persistent underload condition.

If underload exists after the delay and if the underload shutdown (ULDSC) command bit is set, both HS and LS drivers are latched off and the underload (ULD) status bit is set; otherwise the drivers remain on and the ULD bit is set (see Tables 5 and 6). The ULD bit is cleared and channels are re − activated by sending SRR = 1. The channel group select (HBSEL) input bit determines which channels are affected by SRR and also determines which half − bridges are latched off via the ULDSC command bit (see Table 1).

Underload may result from a fault (e.g. open − load) condition or normal circuit behavior (e.g. L/R tau). In motor applications it is often desirable to actively brake the motor by turning on both HS or LS drivers in two half − bridge channels. If the configuration is two LS drivers (LS brake), an underload will result as the motor current decays normally. Utilizing HS brake instead will avoid underload notification.

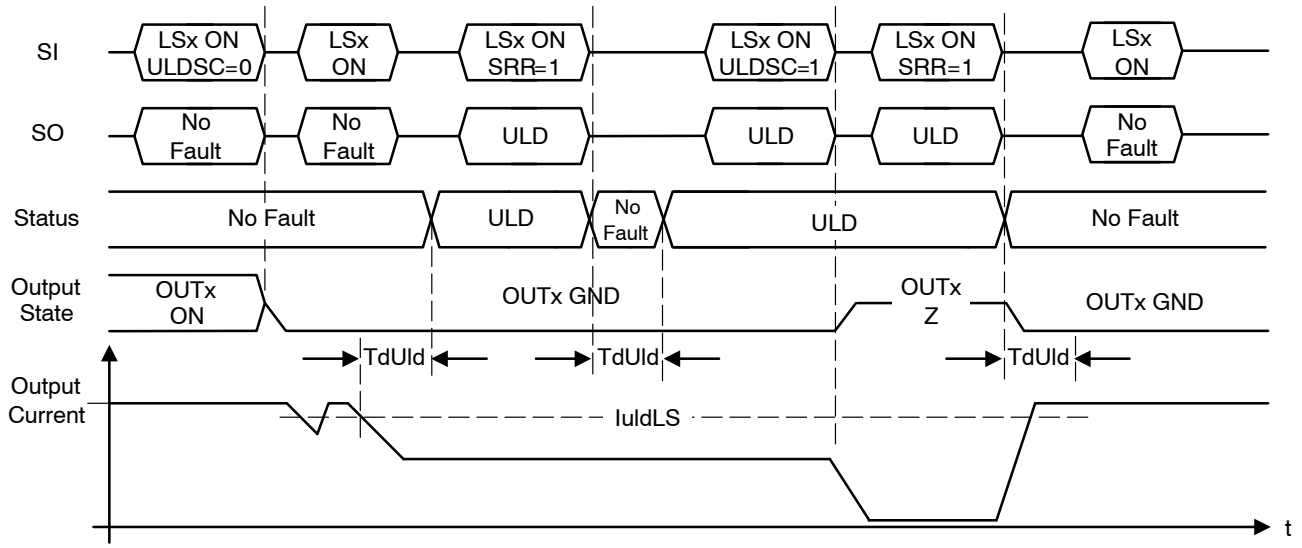

Figure 22. Underload Timing

Share Feedback
Your Opinion Matters

Downloaded from Arrow.com.

Thermal Warning and Thermal Shutdown

Global Notification, Per Half-Bridge Operation

Thermal warning (TW) and thermal shutdown (TSD) detection and control are provided for each half−bridge by monitoring the driver pair's thermal sensor. Thermal hysteresis is provided for each of the warning and shutdown functions to ensure clean detection transitions. Since TW notification precedes TSD, software polling of the TW bit enables avoidance of thermal shutdown. Thermal warning and shutdown timing is shown in Figure 23.

The TW status bit is set when a half−bridge's sensor temperature exceeds the warning level (T_J > Twr), and the bit is automatically cleared when sensor temperature falls below the warning hysteresis level (T_J < TwHy). A channel's output state is unaffected by TW.

When sensor temperature exceeds the shutdown level (T_J > Tsd), the channel's HS and LS drivers are latched off, the TW bit is/remains set, and the TSD (PRE_15) bit is set. The TSD bit is cleared and all affected channels in a group are re−activated (T_J < TsdHy) by sending SRR = 1. The channel group select (HBSEL) input bit determines which channels are affected by SSR.

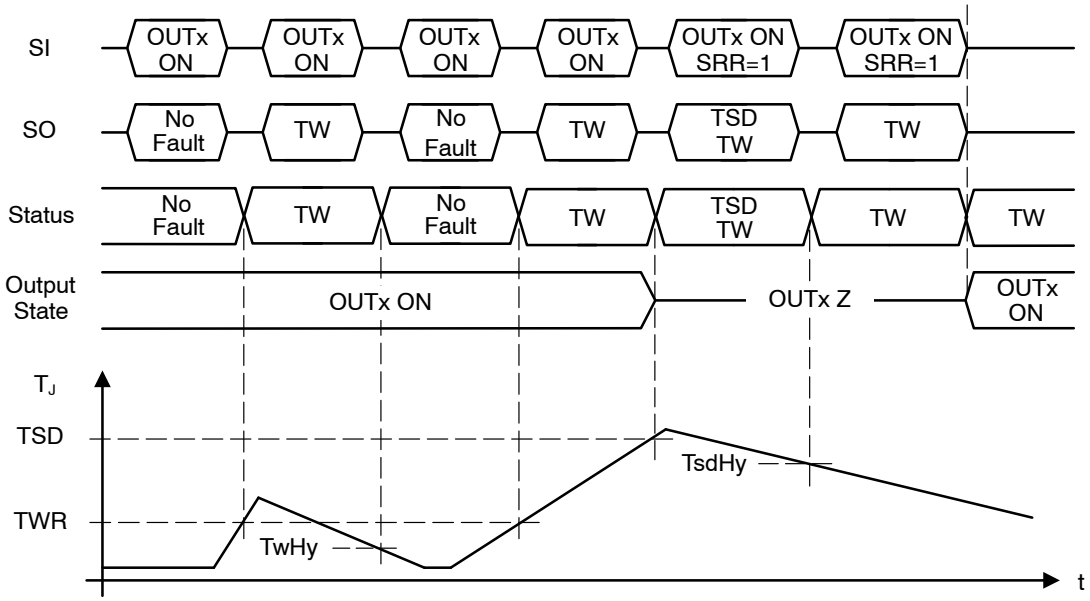

Figure 23. Thermal Warning and Shutdown Timing

The latched thermal shutdown (TSD) information is available on SO after CSB goes low until the first rising SCLK edge. The following procedures must be met for a true TSD reading:

1. SCLK and SI are low before the CSB cycle. Violating these conditions will results in an undetermined SPI behavior or/and an incorrect TSD reading.
2. CSB transitioning from high to low.
3. CSB setup time (TcsbSup) is satisfied and the data is captured before the first SCLK rising edge.

Share Feedback
Your Opinion Matters

Downloaded from Arrow.com.

THERMAL PERFORMANCE ESTIMATES

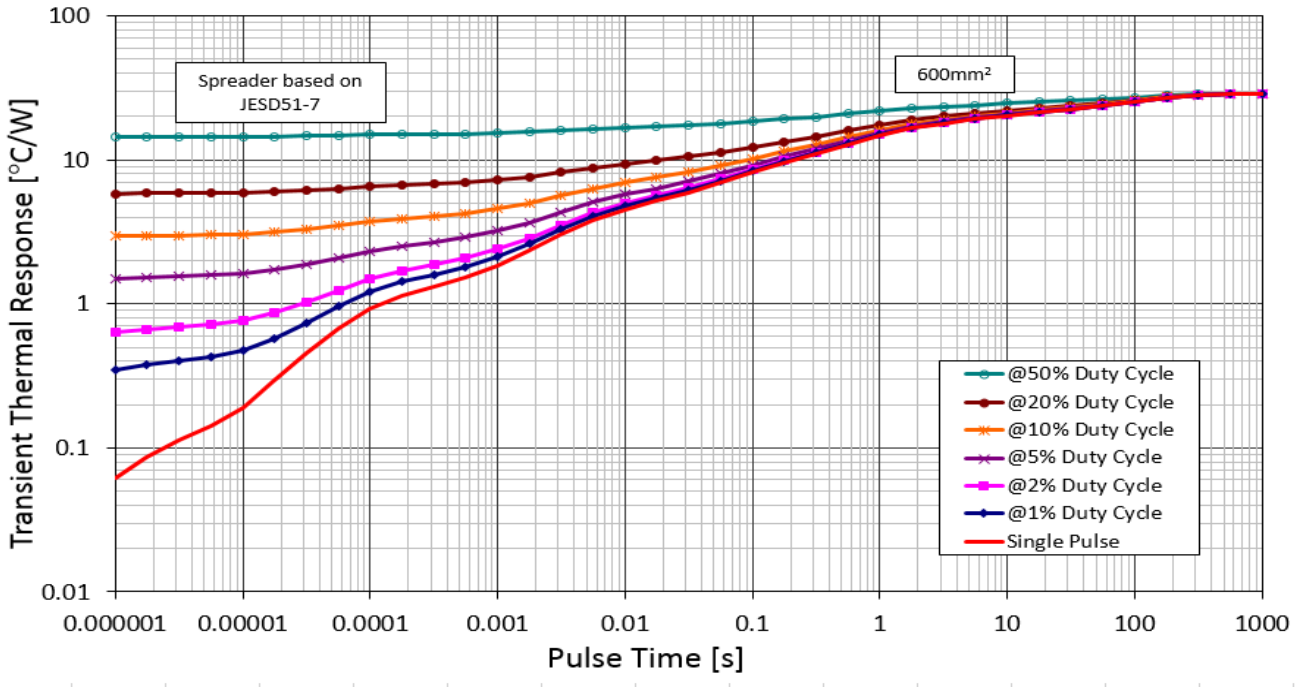

Figure 24. Transient R(t) vs. Pulse Time for 2 oz Spreader

Share Feedback
Your Opinion Matters

Downloaded from Arrow.com.

SCALE 1:1

SSOP24 NB EP
CASE 940AK
ISSUE O

DATE 24 APR 2012

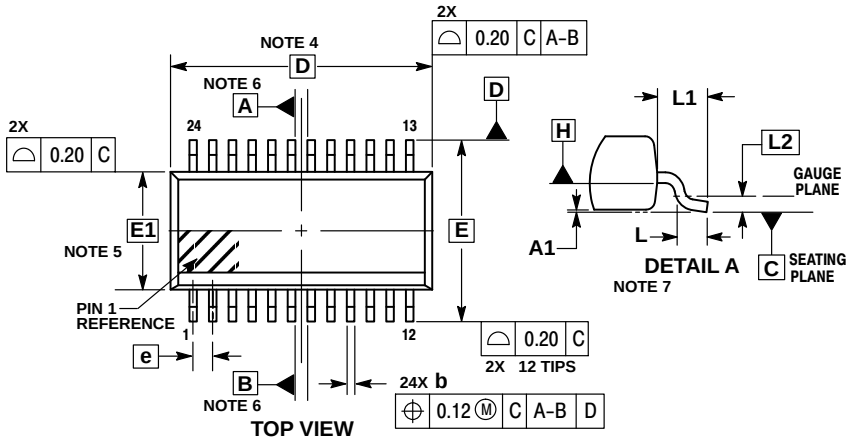

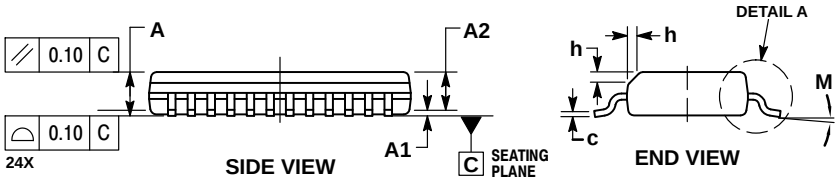

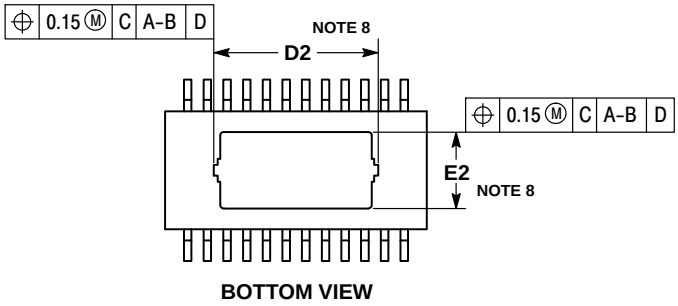

NOTES:
1. DIMENSIONING AND TOLERANCING PER ASME Y14.5M, 1994.
2. CONTROLLING DIMENSION: MILLIMETERS.
3. DIMENSION b DOES NOT INCLUDE DAMBAR PROTRUSION. DAMBAR PROTRUSION SHALL BE 0.10 MAX. AT MMC. DAMBAR CANNOT BE LOCATED ON THE LOWER RADIUS OF THE FOOT. DIMENSION b APPLIES TO THE FLAT SECTION OF THE LEAD BETWEEN 0.10 TO 0.25 FROM THE LEAD TIP.
4. DIMENSION D DOES NOT INCLUDE MOLD FLASH, PROTRUSIONS OR GATE BURRS. MOLD FLASH, PROTRUSIONS OR GATE BURRS SHALL NOT EXCEED 0.15 PER SIDE. DIMENSION D IS DETERMINED AT DATUM PLANE H.
5. DIMENSION E1 DOES NOT INCLUDE INTERLEAD FLASH OR PROTRUSION. INTERLEAD FLASH OR PROTRUSION SHALL NOT EXCEED 0.25 PER SIDE. DIMENSION E1 IS DETERMINED AT DATUM PLANE H.
6. DATUMS A AND B ARE DETERMINED AT DATUM PLANE H.
7. A1 IS DEFINED AS THE VERTICAL DISTANCE FROM THE SEATING PLANE TO THE LOWEST POINT ON THE PACKAGE BODY.
8. CONTOURS OF THE THERMAL PAD ARE UNCONTROLLED WITHIN THE REGION DEFINED BY DIMENSIONS D2 AND E2.

	MILLIMETERS	
DIM	MIN	MAX
A	---	1.70
A1	0.00	0.10
A2	1.10	1.65
b	0.19	0.30
c	0.09	0.20
D	8.64 BSC	
D2	5.28	5.58
E	6.00 BSC	
E1	3.90 BSC	
E2	2.44	2.64
e	0.65 BSC	
h	0.25	0.50
L	0.40	0.85
L1	1.00 REF	
L2	0.25 BSC	
M	0°	8°

RECOMMENDED SOLDERING FOOTPRINT

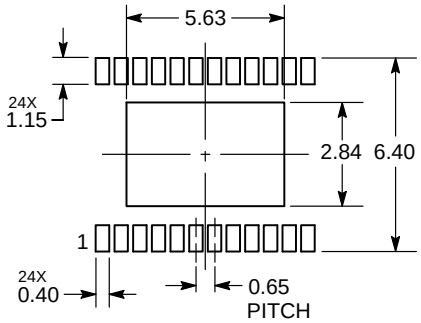

DIMENSIONS: MILLIMETERS

GENERIC MARKING DIAGRAM*



XXXX = Specific Device Code
A = Assembly Location
WL = Wafer Lot
YY = Year
WW = Work Week
G = Pb−Free Package

(Note: Microdot may be in either location)

*This information is generic. Please refer to device data sheet for actual part marking. Pb−Free indicator, “G” or microdot “▪”, may or may not be present. Some products may not follow the Generic Marking.

DOCUMENT NUMBER:	**98AON79998E**	Electronic versions are uncontrolled except when accessed directly from the Document Repository. Printed versions are uncontrolled except when stamped “CONTROLLED COPY” in red.
DESCRIPTION:	**SSOP24 NB EP**	**PAGE 1 OF 1**

onsemi and onsemi are trademarks of Semiconductor Components Industries, LLC dba **onsemi** or its subsidiaries in the United States and/or other countries. **onsemi** reserves the right to make changes without further notice to any products herein. **onsemi** makes no warranty, representation or guarantee regarding the suitability of its products for any particular purpose, nor does **onsemi** assume any liability arising out of the application or use of any product or circuit, and specifically disclaims any and all liability, including without limitation special, consequential or incidental damages. **onsemi** does not convey any license under its patent rights nor the rights of others.

Downloaded from Arrow.com.

onsemi, ONSEMI , and other names, marks, and brands are registered and/or common law trademarks of Semiconductor Components Industries, LLC dba "**onsemi**" or its affiliates and/or subsidiaries in the United States and/or other countries. **onsemi** owns the rights to a number of patents, trademarks, copyrights, trade secrets, and other intellectual property. A listing of **onsemi**'s product/patent coverage may be accessed at www.onsemi.com/site/pdf/Patent−Marking.pdf. **onsemi** reserves the right to make changes at any time to any products or information herein, without notice. The information herein is provided "as−is" and **onsemi** makes no warranty, representation or guarantee regarding the accuracy of the information, product features, availability, functionality, or suitability of its products for any particular purpose, nor does **onsemi** assume any liability arising out of the application or use of any product or circuit, and specifically disclaims any and all liability, including without limitation special, consequential or incidental damages. Buyer is responsible for its products and applications using **onsemi** products, including compliance with all laws, regulations and safety requirements or standards, regardless of any support or applications information provided by **onsemi**. "Typical" parameters which may be provided in **onsemi** data sheets and/or specifications can and do vary in different applications and actual performance may vary over time. All operating parameters, including "Typicals" must be validated for each customer application by customer's technical experts. **onsemi** does not convey any license under any of its intellectual property rights nor the rights of others. **onsemi** products are not designed, intended, or authorized for use as a critical component in life support systems or any FDA Class 3 medical devices or medical devices with a same or similar classification in a foreign jurisdiction or any devices intended for implantation in the human body. Should Buyer purchase or use **onsemi** products for any such unintended or unauthorized application, Buyer shall indemnify and hold **onsemi** and its officers, employees, subsidiaries, affiliates, and distributors harmless against all claims, costs, damages, and expenses, and reasonable attorney fees arising out of, directly or indirectly, any claim of personal injury or death associated with such unintended or unauthorized use, even if such claim alleges that **onsemi** was negligent regarding the design or manufacture of the part. **onsemi** is an Equal Opportunity/Affirmative Action Employer. This literature is subject to all applicable copyright laws and is not for resale in any manner.

ADDITIONAL INFORMATION

TECHNICAL PUBLICATIONS:
Technical Library: www.onsemi.com/design/resources/technical−documentation
onsemi Website: www.onsemi.com

ONLINE SUPPORT: www.onsemi.com/support
For additional information, please contact your local Sales Representative at www.onsemi.com/support/sales

◊

Downloaded from Arrow.com.