finder
RELAYING INNOVATION

# Energy meters

7E
SERIES

- Panels for electrical distribution
- Control panels
- Electrical energy control
- Industrial robots
- Road / tunnel lighting
- Elevators and lifts



Downloaded from Arrow.com.

Finder reserves the right to make changes to its products and their technical specifications at any time and without prior notice, as part of its policy of continuous improvement.
The information contained in this document is provided for indicative purposes only and does not constitute a contractual obligation; errors and omissions excepted.
In the event of any discrepancy between the printed and online versions, the latter, available at findernet.com, shall prevail.

Downloaded from Arrow.com.

**kWh Energy meter 1-phase with electro-mechanical display and S0 pulse output**

**Type 7E.12.8.230.0002**
**10 (25) A , kWh, No MID, horizontal display**

**Type 7E.13.8.230.0010**
**5 (32) A , kWh, MID, 1 module wide**

**Type 7E.16.8.230.0010**
**10 (65) A, kWh, MID, horizontal display**

- Complies with EN 62053-21 and EN 50470
- Accuracy class 1/B
- Protection class II
- S0 pulse output for remote energy monitoring according to EN 62053-31
- Tamper-proof cover with lead seal facility available as an accessory
- Space saving small size
- 35 mm rail (EN 60715) mount

7E.12/7E.13/7E.16
Box clamp



| 7E.12.8.230.0002 | 7E.13.8.230.0010 | 7E.16.8.230.0010 |
|---|---|---|
|  |  |  |
| • Nominal current 10 A (25 A Maximum)<br>• 1-phase 230 V AC<br>• S0 pulse output<br>• 35 mm wide | • Nominal current 5 A (32 A Maximum)<br>• MID certified (50 Hz)<br>• 1-phase 230 V AC<br>• S0 pulse output<br>• 17.5 mm wide | • Nominal current 10 A (65 A Maximum)<br>• MID certified (50 Hz)<br>• 1-phase 230 V AC<br>• S0 pulse output<br>• 35 mm wide |
| 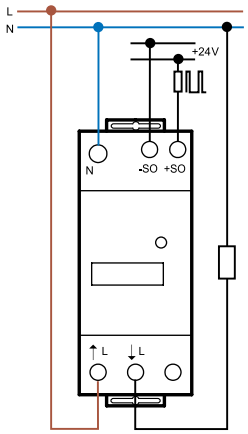 | 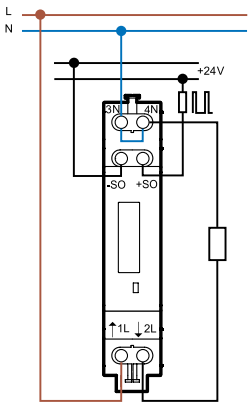 | 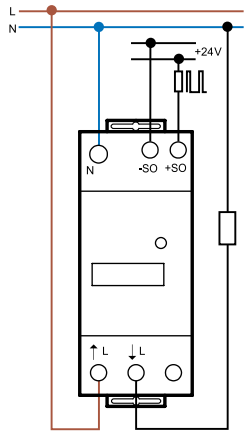 |

For outline drawing see page 10

| Specification | | | | |
|---|---|---|---|---|
| Nominal/Maximum current | A | 10/25 | 5/32 | 10/65 |
| Minimum measured current | A | 0.04 | 0.02 | 0.04 |
| Current range (within accuracy class) | A | 0.5…25 | 0.25…32 | 0.5…65 |
| Maximum peak current | A | 750 (10 ms) | 960 (10 ms) | 1950 (10 ms) |
| Supply (& monitored) voltage ($U_N$) | V AC | 230 | 230 | 230 |
| Operating range | | (0.8…1.15)$U_N$ | (0.8…1.15)$U_N$ | (0.8…1.15)$U_N$ |
| Frequency | Hz | 50 | 50 | 50 |
| Power consumption | W | < 0.5 | < 0.4 | < 0.5 |
| Display (digit height 4 mm) | | Six digit counter, red decimal digit | Seven digit counter, red decimal digit | |
| Max. totalising count/Min. increment | kWh | 99 999.9/0.1 | 999 999.9/0.1 | 999 999.9/0.1 |
| LED-Pulses per kWh | | 2000 | 2000 | 1000 |
| **Open collector- output specification (S0+/S0–)** | | | | |
| Voltage (external supply) | V DC | 5…30 | 5…30 | 5…30 |
| Maximum current | mA | 20 | 20 | 20 |
| Maximum leakage current @ 30 V/25 °C | µA | 10 | 10 | 10 |
| Pulses per kWh | | 1000 | 1000 | 1000 |
| Pulse length | ms | 50 | 50 | 50 |
| Internal series resistance | Ω | 100 | 100 | 100 |
| Maximum cable length @ 30 V/20 mA | m | 1000 | 1000 | 1000 |
| **Technical data** | | | | |
| Accuracy class | | 1 | B | B |
| Ambient temperature (Within accuracy class) | °C | –10…+55 | –10…+55 | –10…+55 |
| Protective class | | II | II | II |
| Protection category: Housing/terminals | | IP 50/IP 20 | IP 50/IP 20 | IP 50/IP 20 |
| **Approvals** (according to type) | | CE UK CA | CE UK CA | |



Downloaded from Arrow.com.

**kWh Energy meter 3-phase**
**MID with electromechanical display and S0 pulse output**

**Type 7E.36.8.400.0010**
**10 (65) A, kWh, MID**

- Complies with EN 62053-21 and EN 50470
- Accuracy class B
- Protection class II
- S0 pulse output for remote energy monitoring according to EN 62053-31
- Tamper-proof cover with lead seal facility available as an accessory
- 35 mm rail (EN 60715) mount

## 7E.36.8.400.0010



- Nominal current 10 A (65 A Maximum)
- MID certified (50 Hz)
- 3-phase
- S0 pulse output
- 70 mm wide

7E.36.8.400.0010
Box clamp



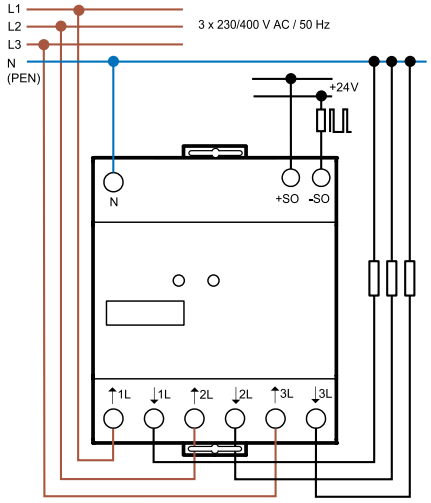


For outline drawing see page 10

| Specification | | |
|---|---|---|
| Nominal/Maximum current | A | 10/65 |
| Minimum measured current | A | 0.04 |
| Current range (within accuracy class) | A | 0.5…65 |
| Maximum peak current | A | 1950 (10 ms) |
| Supply (& monitored) voltage ($U_N$) | V AC | 3 x 230 |
| Operating range | | (0.8…1.15)$U_N$ |
| Frequency | Hz | 50 |
| Power consumption per phase | W | < 1.5 |
| Display (digit height 4 mm) | | Seven digit counter, red decimal digit |
| Max. totalising count/Min. increment | kWh | 999 999.9/0.1 |
| LED-Pulses per kWh | | 100 |
| **Open collector- output specification (S0+/S0–)** | | |
| Voltage (external supply) | V DC | 5…30 |
| Maximum current | mA | 20 |
| Maximum leakage current @ 30 V/25 °C | µA | 10 |
| Pulses per kWh | | 100 |
| Pulse length | ms | 50 |
| Internal series resistance | Ω | 100 |
| Maximum cable length @ 30 V/20 mA | m | 1000 |
| **Technical data** | | |
| Accuracy class | | B |
| Ambient temperature | °C | –10…+55 |
| Protective class | | II |
| Protection category: Housing/terminals | | IP 50/IP 20 |
| **Approvals** (according to type) | | CE UKCA |



IX-2026, www.findernet.com

Downloaded from Arrow.com.

**Three-phase multifunction single or dual tariff energy meters Bi-directional, Class C, MID certified 70°C with M-Bus and RS485 Modbus integrated interface, 2 S0 output and backlit LCD display for 3 or 4 wire systems**

**Type 7E.85.8.400.0210**
**6 A direct connection, up to 10 000 A using current transformer, dual tariff (7E.85-0212)**

**Type 7E.85.8.400.0310**
**6 A direct connection, up to 10 000 A using current transformer, dual tariff (7E.85-0312)**

- Display of total or partial (resettable) energy consumption: kWh, kVAh or kvarh - for both T1 and T2 tariffs - for the total system or per phase
- Scroll to view the following instantaneous values: V, A, PF, kW, kVA, kvar, Hz and direction of power flow
- For networks: single phase two wires (1p2w), three phase three wires (3p3w) and three phase four wires (3p4w)
- 8 digit backlit LCD display
- RS485 Modbus integrated communications port - 7E.85-021x
- M-Bus integrated communications port - 7E.85-031x
- Programmable** S0 pulse output for remote energy monitoring according to EN 62053-31
- Active power accuracy Class C according to EN 50470-3
- Reactive power accuracy Class 2 according to EN 62053-23
- Protection category II
- Accessories: sealable tamperproof terminal cover
- 35 mm rail (EN 60715) mount

* Default transmission baud rate: 9600 bps - 7E.85-021x
Default transmission baud rate: 2400 bps - 7E85-031x
** S01 output can be associated with kWh or kvarh.

For outline drawing see page 10

NEW **7E.85.8.400.021x**



- Reference current 1 A (6 A Maximum)
- RS485 Modbus integrated interface
- Three-phase systems programmable 3 or 4 wire
- Usable with current transformer
- Programmable CT secondary
- Dual tariff
- MID certified

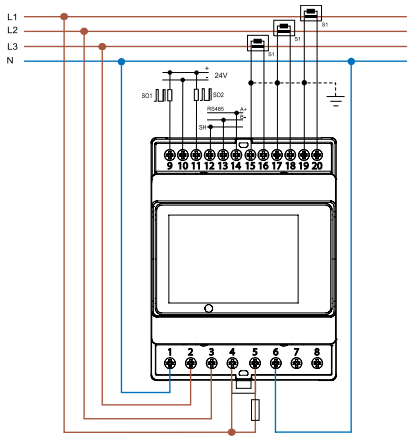


NEW **7E.85.8.400.031x**



- Reference current 1 A (6 A Maximum)
- M-Bus integrated interface
- Three-phase systems programmable 3 or 4 wire
- Usable with current transformer
- Programmable CT secondary
- Dual tariff
- MID certified

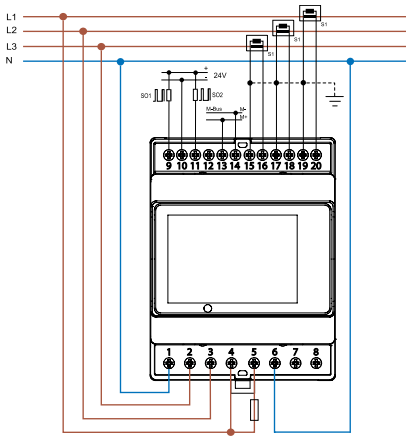


| | | | |
|---|---|---|---|
| **Specification** | | | |
| Reference/Maximum current $I_n/I_{max}$ | A | 1/6 | 1/6 |
| Starting current $I_{st}$ | A | 0.005 | 0.005 |
| Minimum measured current $I_{min}$ | A | 0.05 | 0.05 |
| Current range (within accuracy class) | A | 0.05…6 | 0.05…6 |
| Maximum peak current | A | 120 (500 ms) | 120 (500 ms) |
| Supply (& monitored) nominal voltage $U_N$ | V AC | 3 x 230/400 | 3 x 230/400 |
| Operating range L-N | V AC | 100…277 | 100…277 |
| Operating range L-L | V AC | 100…480 | 100…480 |
| Frequency | Hz | 50/60 | 50/60 |
| Power consumption per phase | W/VA | ≤ 1/3.5 | ≤ 0.5/7.5 |
| CT burden (per phase) | VA | 0.04 | 0.04 |
| Display | | Eight digit counter - backlit LCD display | Eight digit counter - backlit LCD display |
| Max. totalising count/Min. increment | kWh | 999 999.99/0.01 | 999 999.99/0.01 |
| LED pulses per kWh | | 3200 | 3200 |
| LED pulse length | ms | 100 | 100 |
| **Aux Power input** | | | |
| Operating range | V AC | 100…480 | 100…480 |
| | V DC | 140…680 | 140…680 |
| Power consumption | VA | < 10 | < 10 |
| Nominal current | A | 0.01 | 0.01 |
| **Protocol technical information** | | | |
| Bus system | | RS485 Modbus | M-Bus |
| Max. bus length | m | 1000 | — |
| Max. Modbus energy meters connectable | | 32 | — |
| Baud rate* | Baud | 2400…38 400 | 300…9600 |
| **Output specification (S0+/S0–)** | | | |
| Number/Type | | 2 opto-isolated output | 2 opto-isolated output |
| Voltage range/Maximum current (conforming to EN 62053-31) | V DC/mA | 3.3…27/1…27 | 3.3…27/1…27 |
| Pulse for kWh S01/S02** | Imp/kWh** | Configurable/3200 | Configurable/3200 |
| Pulse length | ms | 200/100 (default)/60 | 200/100 (default)/60 |
| **Technical data** | | | |
| Accuracy class | | C | C |
| Ambient temperature (Within accuracy class) | °C | –40…+70 | –40…+70 |
| Protective class | | II | II |
| Protection category | | IP 51 (Indoor) | IP 51 (Indoor) |
| **Approvals** (according to type) | | CE UK CA | |



Downloaded from Arrow.com.

## Ordering information - Electromechanical meters

Example: Energy meter 32 A/230 V AC, with MID certification, Class B accuracy, for 35 mm rail (EN 60715) mounting.
Available with Tamper-proof lead sealed cover as accessory.

**7 E . 1 3 . 8 . 2 3 0 . 0 0 1 0**

**Series**

**Function**
1 = 1-phase
3 = 3-phase

**Current**
2 = 25 A
3 = 32 A
6 = 65 A

**Supply version**
8 = AC 50 Hz

**Supply voltage**
230 = 230 V AC 50 Hz
400 = 3 x 230/400 V AC 50 Hz

**Option**
0 = S0 +/- pulse output

**Special version**
0 = Standard
1 = MID compliant versions

**Option**
0 = Standard
2 = Standard (7E.12)

**All versions/width**
7E.12.8.230.0002/35 mm
7E.13.8.230.0010/17.5 mm
7E.16.8.230.0010/35 mm
7E.36.8.400.0010/70 mm

E

## Technical data

| **Insulation EN 62053-21** | | | **7E.12, 7E.13, 7E.16** | **7E.36** |
|---|---|---|---|---|
| Insulation rated voltage | | V | 250 | 250 |
| Overvoltage category | | | IV | IV |
| Insulation | between active parts and S0+/S0– terminals | kV (1.2/50 µs) | 6 | 6 |
| | between adjacent phases | kV (1.2/50 µs) | — | 6 |
| Insulation | between supply and S0+/S0– | V AC | 4000 | 4000 |
| | between adjacent phases | V AC | — | 4000 |
| Protection class | | | II | II |

| **EMC Specification** | | **Reference standard** | |
|---|---|---|---|
| Electrostatic discharge | contact discharge | EN 61000-4-2 | 8 kV |
| | air discharge | EN 61000-4-2 | 15 kV |
| Radio-Frequency Electromagnetic Field (80…1000)MHz | | EN 61000-4-3 | 10 V/m |
| Fast Transients (Burst) (5-50 ns, 5 kHz) | on Supply terminals | EN 61000-4-4 | class 4 (4 kV) |
| | on S0+/S0– terminals | EN 61000-4-4 | class 4 (2 kV) |
| Surge (1.2/50 µs) | on Supply terminals | EN 61000-4-5 | class 4 (4 kV) |
| | on S0+/S0– terminals | EN 61000-4-5 | class 3 (1 kV) |
| Radio-Frequency Common Mode (0.15…80)MHz on Supply terminals | | EN 61000-4-6 | 10 V |
| Radiated and Conducted Emission | | EN 55022 | class B |

| **Other data** | | | | | | |
|---|---|---|---|---|---|---|
| Pollution degree | | | 2 | | | |
| Vibration resistance | (10…60)Hz | mm | 0.075 | | | |
| | (60…150)Hz | g | 1 | | | |
| Vibration resistance of the internal mechanical counter | (10…500)Hz | g | 2 | | | |
| Shock resistance | | g/18 ms | 30 | | | |
| Shock resistance of the internal mechanical counter | | g/18 ms | 350 | | | |
| Power lost to the environment | | | **7E.12, 7E.13** | **7E.16** | **7E.36** | |
| | without current | W | 0.4 | 0.4 | 1.5 | |
| | with maximum current | W | 1 | 2 | 6 | |

| **Supply terminals** | | **7E.12, 7E.13** | | **7E.16, 7E.36** | |
|---|---|---|---|---|---|
| Max. wire size | | solid cable | stranded cable | solid cable | stranded cable |
| | $mm^2$ | 1…6 | 0.75…4 | 1.5…16 | 1.5…16 |
| | AWG | 18…10 | 18…12 | 16…6 | 16…6 |
| Screw torque for $I_{max}$ | Nm | 0.8…1.2 | | 1.5…2 | |
| Screw | | Pozidriv No.1, Flat No.1, 2 | | | |

| **S0+/S0– terminals** | | | | | |
|---|---|---|---|---|---|
| Max. wire size | | solid cable | stranded cable | solid cable | stranded cable |
| | $mm^2$ | 2.5 | 1.5 | 2.5 | 1.5 |
| | AWG | 14 | 16 | 14 | 16 |
| Screw torque for $I_{max}$ | Nm | 0.5 | | 0.8 | |
| Screw | | Pozidriv No.0, Flat No.1 | | Pozidriv No.0, Flat No.2 | |



IX-2026, www.findernet.com

Downloaded from Arrow.com.

## Ordering information - Multifunction digital energy meters

Example: 3-phase energy meter for current transformer operation (6 A/400 V AC), with MID certification, Class C accuracy, for 35 mm rail (EN 60715) mounting. Supplied accessories: Tamper-proof lead sealed cover as accessory.

| 7 | E | . | 8 | 5 | . | 8 | . | 4 | 0 | 0 | . | 0 | 2 | 1 | 2 |
|---|---|---|---|---|---|---|---|---|---|---|---|---|---|---|---|

**Series**

**Function**
8 = 3-phase, backlit display, for current transformer operation

**Current**
5 = 6 A (up to 10 000 A, using 7E.85 and CT)

**Supply version**
8 = AC 50/60 Hz

**Supply voltage**
400 = 3 x 230/415 V AC 50/60 Hz

**Special version**
0 = Standard

**Option**
2 = RS485 Modbus integrated interface + 2 x S0 pulse output
3 = M-Bus integrated interface + 2 x S0 pulse output

**Version**
1 = Conforms to MID directive

**Special version**
0 = Single tariff
2 = Dual tariff

**Table 1**

| S0 Pulse | |
|---|---|
| 1000 | 1000 kWh/kVArh |
| 100 | 100 kWh/kVArh |
| 10 | 10 kWh/kVArh |
| 1 | 1 kWh/kVArh |
| 0.1 | 100 Wh/kVArh |
| 0.01 | 10 Wh/kVArh |

**Available versions**

| Modbus | M-Bus |
|---|---|
| 7E.85.8.400.0210 | 7E.85.8.400.0310 |
| 7E.85.8.400.0212 | 7E.85.8.400.0312 |

## Technical data

| **Insulation** | | | **7E.85.8.400.0xxx** | |
|---|---|---|---|---|
| Insulation rated voltage | | V | 250 | |
| Insulation | between active parts and S0+/S0– terminals | kV (1.2/50 µs) | 7.4 | |
| | between supply and Modbus, M-Bus terminal | kV (1.2/50 µs) | 7.4 | |
| | between adjacent phases | kV (1.2/50 µs) | 7.4 | |
| Insulation | between active parts and S0+/S0– terminals | V AC | 4000 | |
| | between supply and Modbus, M-Bus terminal | V AC | 4000 | |
| | between adjacent phases | V AC | n/a | |
| Protection class | | | II | |
| **EMC Specification according to 61000-4-(2/3/4)** | | | **7E.85.8.400.0xxx** | |
| Electrostatic discharge | contact discharge | | 8 kV | |
| | air discharge | | 15 kV | |
| Radio frequency Electromagnetic field (80…2000)MHz | | | 30 V/m | |
| Fast Transients (burst) (5-50 ns, 5 kHz) | on Supply terminals | | 4 kV | |
| | on S0+/S0– terminals | | 4 kV | |
| | Modbus, M-Bus terminal | | 4 kV | |
| Surge (1.2/50 µs) | on Supply terminals | | 4 kV | |
| | on S0+/S0– terminals | | 4 kV | |
| | Modbus, M-Bus terminal | | 4 kV | |
| **Other data** | | | **7E.85.8.400.0xxx** | |
| Pollution degree | | | 2 | |
| Vibration resistance | | | EN 60068-2-6 | |
| Shock resistance | | | EN 60068-2-27 | |
| Power lost to the environment | Max value per phase | | 1 W/7.5 VA | |
| | CT burden | | 0.04 VA/per phase | |
| **Supply terminals** | | | **7E.85.8.400.0xxx** | |
| Max. wire size | | | solid cable | stranded cable |
| (Terminals from 1 to 8) | | $mm^2$ | 0.5…2.5 | 0.5…2.5 |
| | | AWG | 21…14 | 21…14 |
| Screw torque | | Nm | 0.4 | 0.4 |
| **S0+/S0–, TA terminals, RS485 Modbus, M-Bus** | | | **7E.85.8.400.0xxx** | |
| Max. wire size | | | solid cable | stranded cable |
| (Terminals from 9 to 20) | | $mm^2$ | 0.5…2.5 | 0.5…2.5 |
| | | AWG | 21…14 | 21…14 |
| Screw torque | | Nm | 0.4 | 0.4 |



Downloaded from Arrow.com.

## Mechanical Display Type 7E.12, 7E.13, 7E.16, 7E.36

### LED indication (Normal operation)

| Type | Energy consumption | | | Pulses per kWh | Pulse space | The LED Pulse rate represents the instantaneous power being consumed, according to the following |
|---|---|---|---|---|---|---|
| | None | Low | High | | | |
| 7E.12<br>7E.13 |  |  |  | 2000 | 100 ms | kW = (number of pulse per Minute) / 33.3 |
| 7E.16 |  |  |  | 1000 | 100 ms | kW = (number of pulse per Minute) / 16.7 |
| 7E.36 |  |  |  | 100 | 150 ms | kW = (number of pulse per Minute) / 1.7 |

### LED indication (Abnormal operation)

Status indicates errors of installation, as below

**Type 7E.12, 7E.13, 7E.16**

Device ON, incorrect connection (L-N inverted).
Mark = 600 ms, Space = 600 ms



**Type 7E.36**

Mark = 100 ms,
Phase L1↑ L1↓ inverted or loss

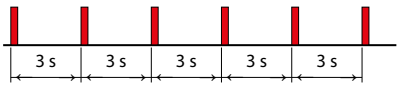


Phase L2↑ L2↓ inverted or loss

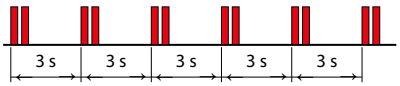


Phase L3↑ L3↓ inverted or loss

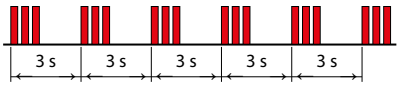


Phase L1↑ L1↓ and L2↑ L2↓ inverted or loss

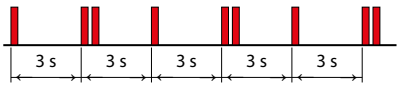


Phase L1↑ L1↓ and L3↑ L3↓ inverted or loss

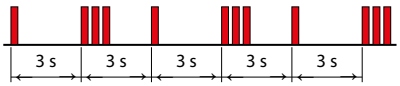


Phase L2↑L2↓ and L3↑L3↓ inverted or loss

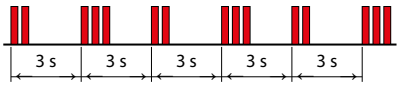


Phase L1↑L1↓ and L2↑L2↓ and L3↑L3↓ inverted or loss

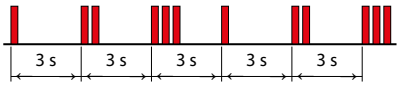


## S0+/S0– Open collector output wiring diagram Type 7E.12, 7E.13, 7E.16, 7E.36

The pulsating open collector output available at terminals S0+ and S0– can be interfaced with the input of a computer, plc or other energy management equipment to allow the remote monitoring of energy consumed.

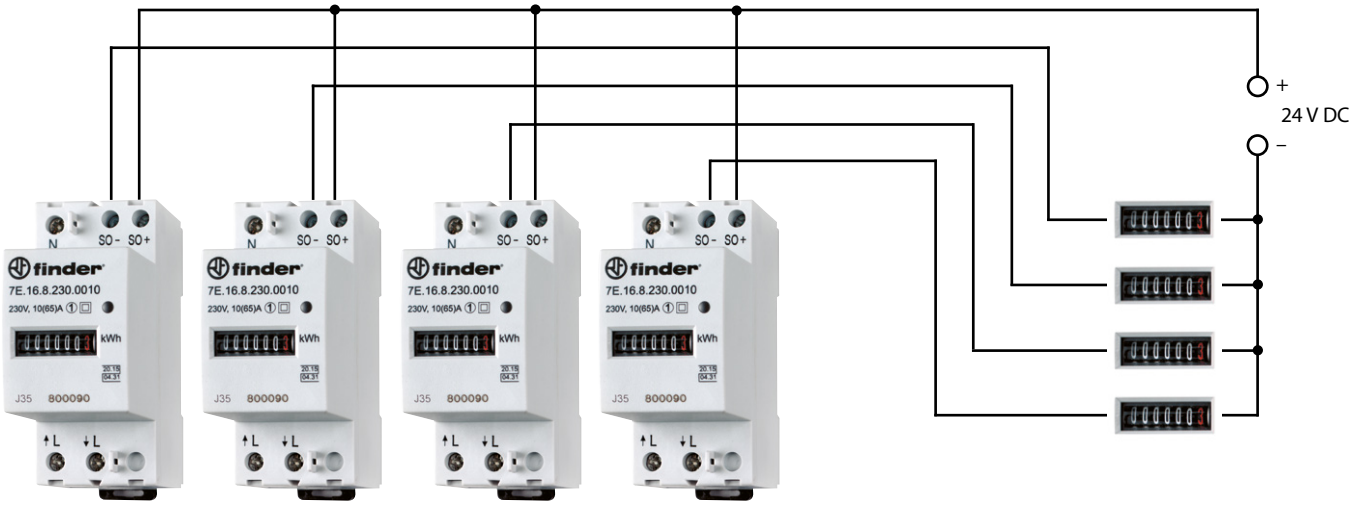


Energy meters – at difference locations
(Note: Both Single and Dual tariff meters provide only a single pulsating output)

Central monitoring/management system
(max. 20 mA for each input)

## S0-Output Type 7E.12, 7E.13, 7E.16

S0+/S0– Open collector output

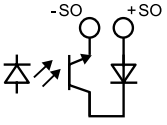


## S0-Output Type 7E.36

S0+/S0– Open collector output

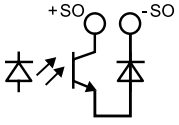




IX-2026, www.findernet.com

Downloaded from Arrow.com.

## Wiring diagrams - 7E.85

Type 7E.85.8.400.0210

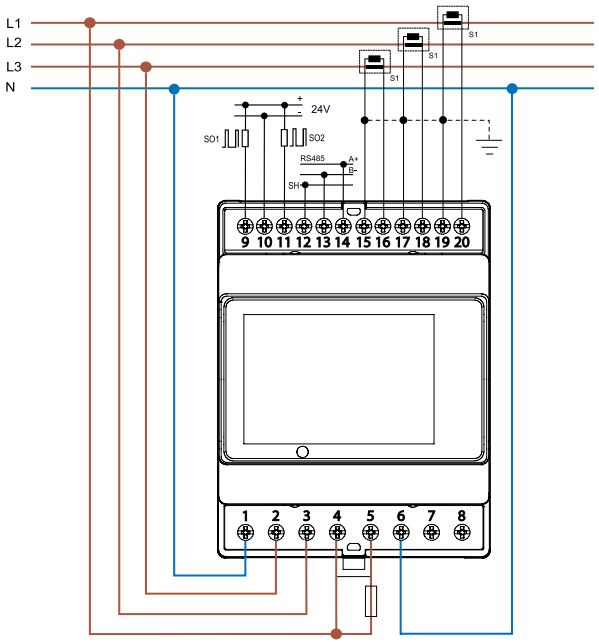


Type 7E.85.8.400.0212

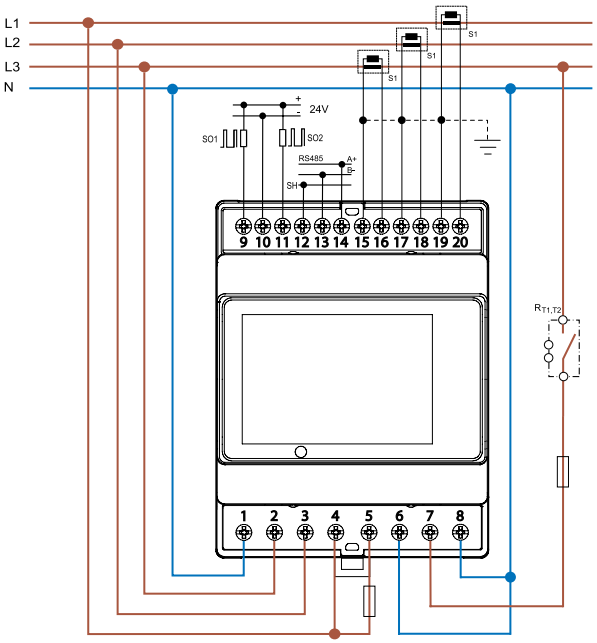


Type 7E.85.8.400.0310

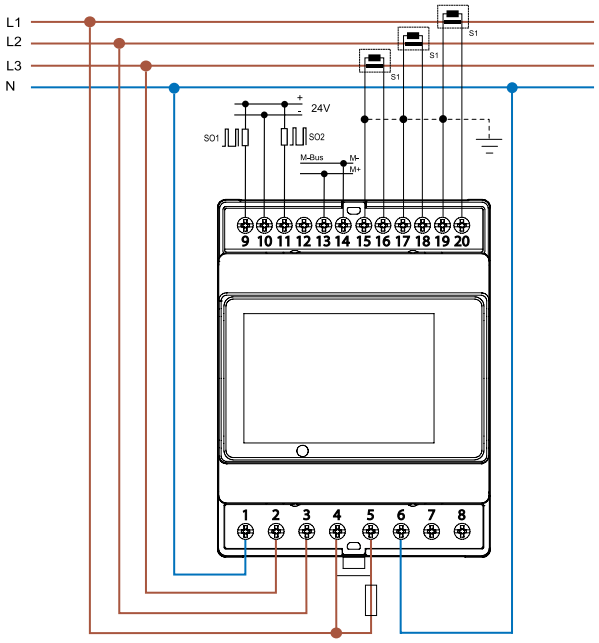


Type 7E.85.8.400.0312

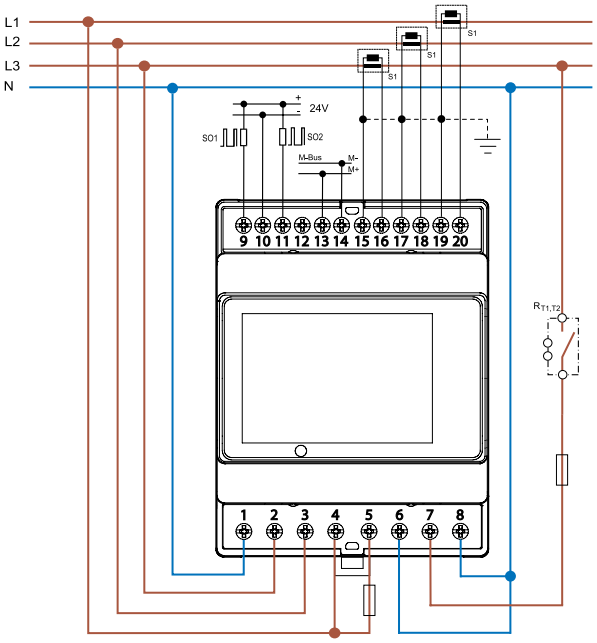


E



Downloaded from Arrow.com.

## Outline drawings

Type 7E.12.8.230.0002/7E.16.8.230.0010
Box clamp

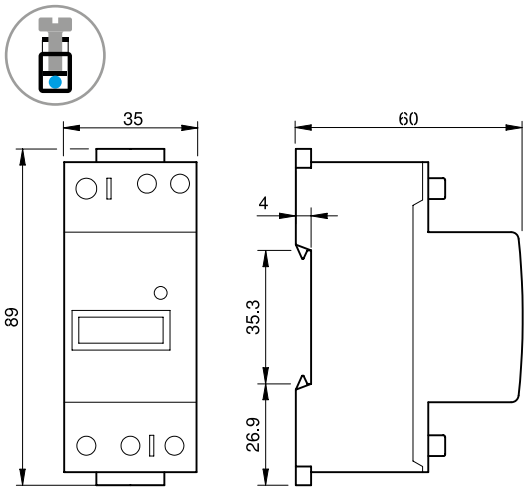


Type 7E.13.8.230.0010
Box clamp

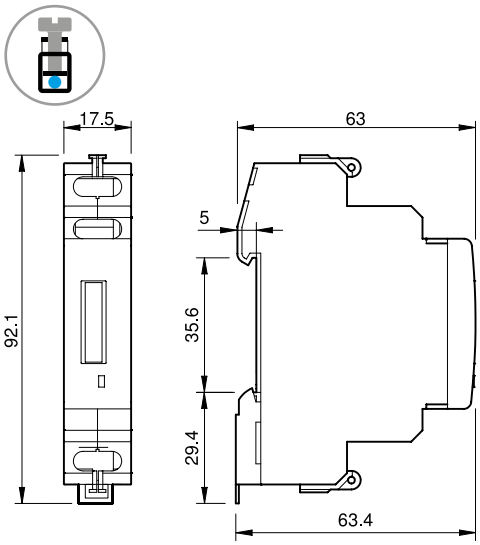


Type 7E.36.8.400.0010
Box clamp

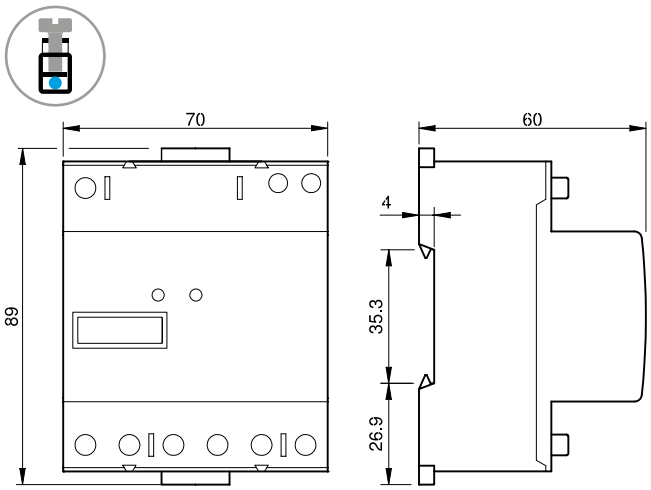


Type 7E.85.8.400.021x/7E.85.8.400.031x
Box clamp

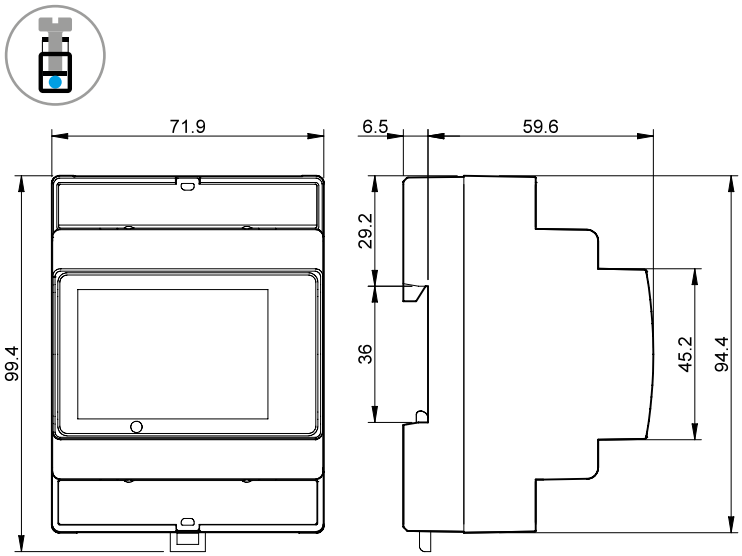




Downloaded from Arrow.com.

IX-2026, www.findernet.com

## Accessories



07E.13

| **Terminal cover** for type 7E.13 | 07E.13 |
|---|---|

For the tamper-proof lead seal use two terminal covers



07E.16

| **Terminal cover** for type 7E.12, 7E.16 and 7E.36 | 07E.16 |
|---|---|

7E.12, 7E.16 - For the tamper-proof lead seal use two terminal covers
7E.36 - For the tamper-proof lead seal use four terminal covers

## Terms and definitions

| | |
|---|---|
| I | The electrical current flowing through the meter |
| $I_n$ | The specified reference current for which the meter has been designed |
| $I_{st}$ | The lowest declared value of "I" at which the meter registers active electrical energy at unity power factor (polyphase meters with balanced load) |
| $I_{min}$ | The values of "I" above which the error lies within maximum permissible errors (MPEs) (polyphase meters with balanced load) |
| $I_{tr}$ | The value of "I" above which the error lies within the smallest MPE corresponding to the class index of the meter |
| $I_{max}$ | The maximum value of "I" for which the error lies within the MPEs |

**Detailed structure of the protocol is available on line**



IX-2026, www.findernet.com



Downloaded from Arrow.com.

Downloaded from Arrow.com.