Compact Intelligent Power Module (IPM) Motor Control Development Kit (MDK) 1 kW

EVBUM2775/D

This User Guides refer to revision 0.4 of the SECO−1KW−MCTRL−GEVK evaluation board.

Description

This user guide provides practical guidelines for compact Intelligent Power Module (IPM) evaluation board with interleaved power factor Correction (PFC) SECO−1KW−MCTRL−GEVB including its main features and key data. The board is fully compatible with the *Universal Controller Board (UCB)*, based on the Xilinx Zynq−7000 SoC, which embeds FPGA logic and two ARM Cortex−A9 processors. As such, the system is fit for high−end control strategies and enables operation of a variety of motor technologies (AC induction motor, PMSM, BLDC, etc.). The board was developed to support customers during their first steps designing application with IPM and PFC. The design was tested as described in this document but not qualified regarding safety requirements or manufacturing and operation over the whole operating temperature range or lifetime. The board is intended for functional testing under laboratory conditions and by trained specialists only.

Collateral

- SECO−1KW−MCTRL−GEVB
- Universal Controller Board (UCB)
- NFAQ1060L36T
- NCP1632
- FCPF125N65S3
- NCP1063
- NCS2003
- NCS2250

EVAL BOARD USER'S MANUAL

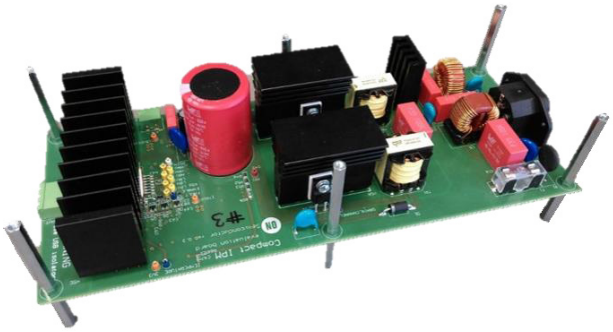

Features

- 850 W complete motor control solution with AC mains supply 230 Vrms ±15 %, EMI filter, 2−channel interleaved Power Factor Correction (PFC)
- Compatible with Universal Controller Board (UCB) FPGA−controller based on Xilinx Zynq− 7000 SoC
- User−friendly GUI with V/f and FOC control use cases for rapid evaluation
- Highly integrated power module NFAQ1060L36T containing an inverter power stage for a high voltage 3−phase inverter in a DIP−S3 package
- PFC stage using NCP1632 controller, FCPF125N65S3 NMOS power transistors and FFSPF1065A diodes
- DC/DC converter producing auxiliary power supply 15VDC – non−isolated buck converter using NCP1063
- 3 phase current measurement using 3 x NCS2003 operational amplifier
- Over current protection using NCS2250 comparator

Attention: The SECO−1kW−MCTRL−GEVB is powered by AC Mains, and exposed to high voltage. Only trained personnel should manipulate and operate on the system. Ensure that all boards are properly connected before powering, and that power is off before disconnecting any boards. It is mandatory to read the Safety Precautions section before manipulating the board. Failure to comply with the described safety precautions may result in personal injury or death, or equipment damage.

© Semiconductor Components Industries, LLC, 2020

Downloaded from Arrow.com.

Overview

The block diagram of the whole system is represented in Figure 1. The picture of the real board is in the Figure 2 and Figure 3.

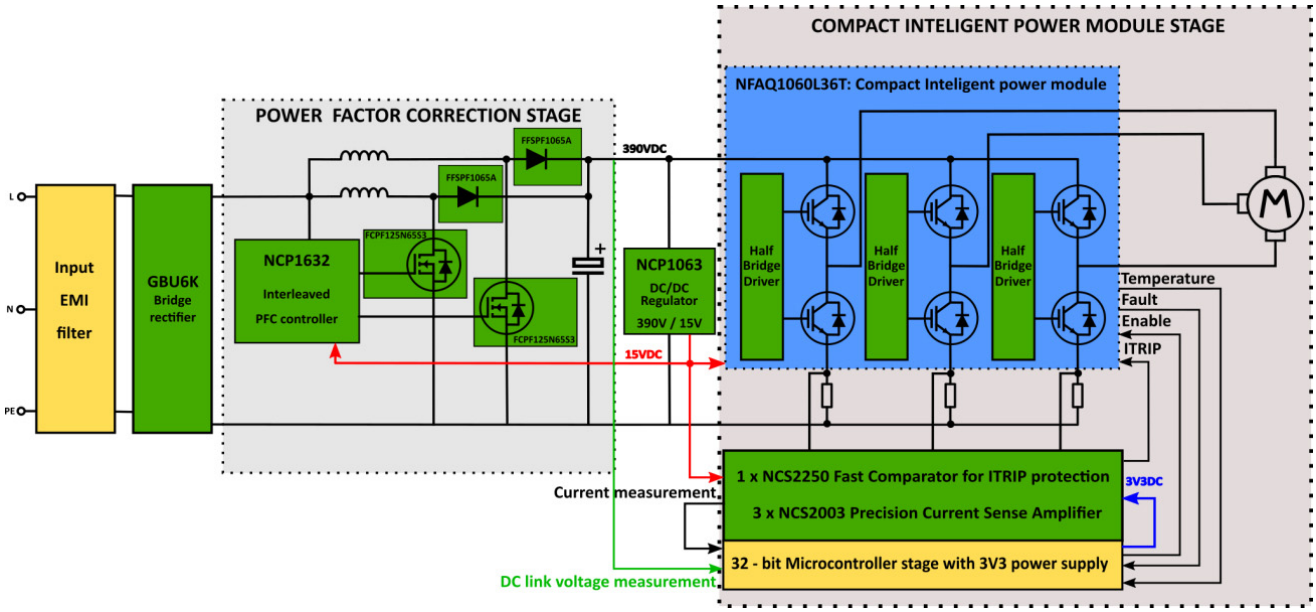

Figure 1. Block Diagram of the Evaluation Board

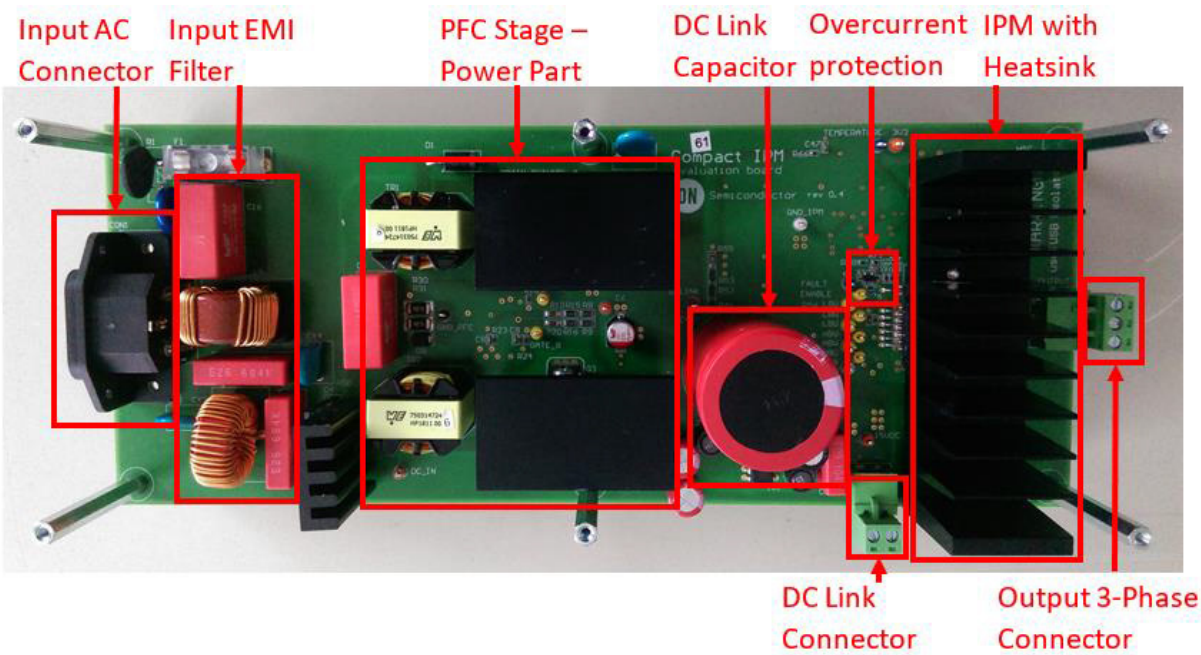

Figure 2. Picture of the Evaluation Board – Top Side

Downloaded from Arrow.com.

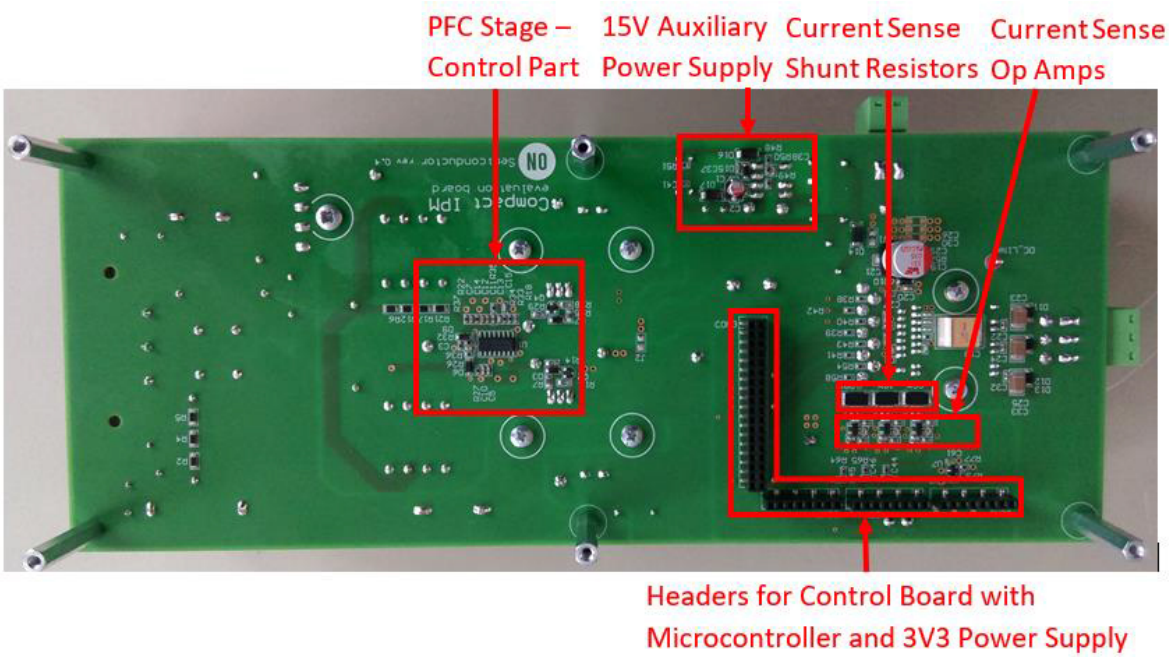

Figure 3. Picture of the Evaluation Board – Bottom Side

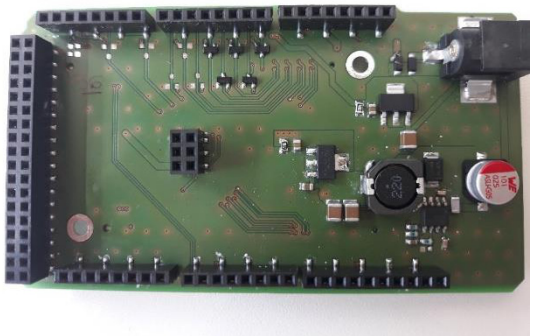

(Top Side)

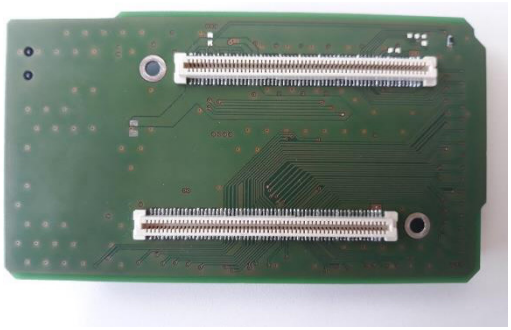

(Bottom Side)

Figure 4. Picture of the UCB Adapter

PREREQUISITES

Hardware

- SECO−1 kW−MCTRL−GEVB (includes power board and adapter for UCB)
- AC power cord one−phase
- Universal Controller Board (UCB) or pin−compatible controller board
- USB isolator (5 kV optical isolation)
- HF ferrite clamp i.e. WE 7427154

Software

- Downloadable GUI
- Binary file

Downloaded from Arrow.com.

SPECIFICATION

The specification and main features can be seen in the Table 1.

Table 1. EVALUATION BOARD SPECIFICATIONS

Parameters	Values	Conditions/comments
INPUT		
Voltage	230 V_{rms}±15%	
OUTPUT		
Power	850 W	Input 230 V_{AC}, f_{PWM} = 16 kHz, T_A = 25°C
Current per IPM leg	±5 A_{rms}	T_C = 100°C
DC BUS Voltage	390 V	Higher voltage value is created by interleaved PFC with NCP1632 working as a booster
CURRENT FEEDBACK		
Current sensing resistors	39 mΩ	
Op Amp power supply	3.3 V	
Set Op Amp gain	5	
Set output offset	1.65 V	Because of negative current measurement
Overcurrent protection	9 A_{peak}	Configured by shunt resistors and comparator threshold (voltage divider)
AUXILIARY POWER SUPPLY		
15 V	4.6 W	Used NCP1063
CONTROL		
Board with Microcontroller and 3V3 power supply		Arduino DUE headers
Type of control		V/f, Field Oriented Control (Sensor−less)
Supported type of motors		ACIM, PMSM, BLDC
APPLICATION		
White goods (washers), Industrial fans, Industrial automation		

Downloaded from Arrow.com.

SAFETY PRECAUTIONS

It is mandatory to read the following precautions before manipulating the SECO−1KW−MCTRL−GEVB.

Table 2.

SECO−1KW−MCTRL−GEVB	
	The ground potential of the system is biased to a negative DC bus voltage potential. When measuring voltage waveform by oscilloscope, the scope's ground needs to be isolated. Failure to do so may result in personal injury or death
	The ground potential of the system is NOT biased to an earth (PE) potential. When connecting the MCU board via USB to the computer, the appropriate galvanically isolated USB isolator have to be used. The recommended isolation voltage of USB isolator is 5 kV
	SECO−1KW−MCTRL−GEVB system contains DC bus capacitors which take time to discharge after removal of the main supply. Before working on the drive system, wait ten minutes for capacitors to discharge to safe voltage levels. Failure to do so may result in personal injury or death.
	Only personnel familiar with the drive and associated machinery should plan or implement the installation, start−up and subsequent maintenance of the system. Failure to comply may result in personal injury and/or equipment damage.
	The surfaces of the drive may become hot, which may cause injury.
	SECO−1KW−MCTRL−GEVB system contains parts and assemblies sensitive to Electrostatic Discharge (ESD). Electrostatic control precautions are required when installing, testing, servicing or repairing this assembly. Component damage may result if ESD control procedures are not followed. If you are not familiar with electrostatic control procedures, refer to applicable ESD protection handbooks and guidelines.
	A drive, incorrectly applied or installed, can result in component damage or reduction in product lifetime. Wiring or application errors such as under sizing the motor, supplying an incorrect or inadequate AC supply or excessive ambient temperatures may result in system malfunction.
	Remove and lock out power from the drive before you disconnect or reconnect wires or perform service. Wait ten minutes after removing power to discharge the bus capacitors. Do not attempt to service the drive until the bus capacitors have discharged to zero. Failure to do so may result in personal injury or death.
	SECO−1KW−MCTRL−GEVB system is shipped with packing materials that need to be removed prior to installation. Failure to remove all packing materials which are unnecessary for system installation may result in overheating or abnormal operating condition.

Downloaded from Arrow.com.

SCHEMATICS AND LAYOUT

To meet customer requirements and make the evaluation board a basis for development, all necessary technical data like schematics, layout and components are included in this chapter. Also simple measurements were done to show the functionality of individual stages.

Input EMI Filter

Figure 5 depicts schematic from AC input to rectifier input. This circuitry include a passive EMI filter consisting of elements C16, L5, CY1, CY3, CY4, C51, L4 and C17.

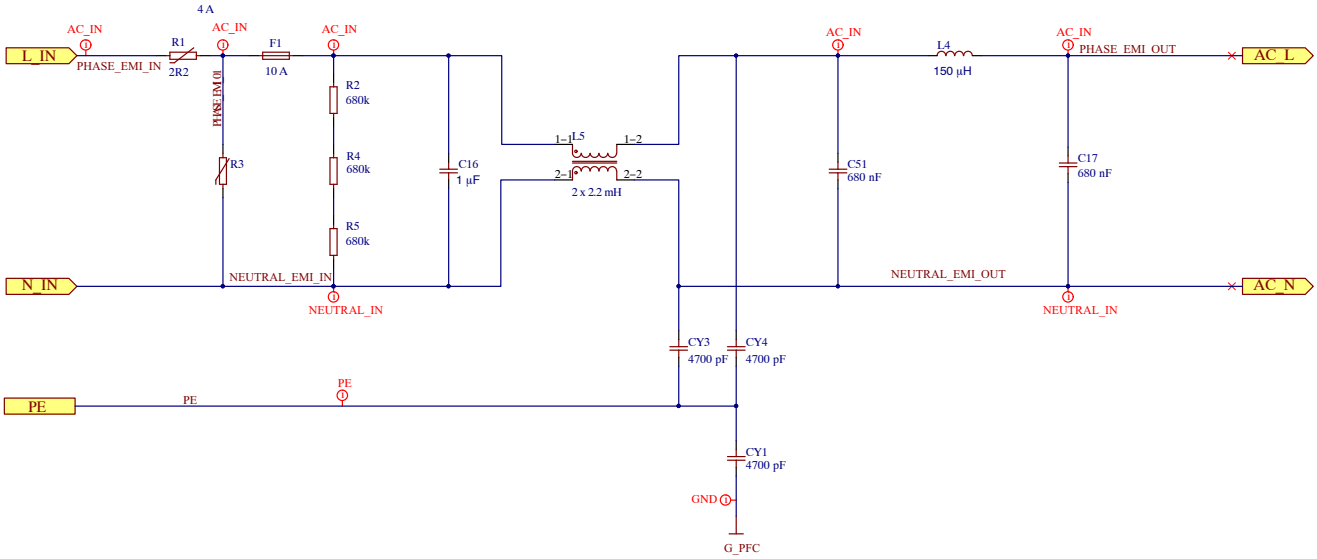

Figure 5. Schematic of EMI filter

Downloaded from Arrow.com.

Interleaved PFC Stage

In higher power applications to utilize full capacity power of mains and reduce harmonics is PFC−regulators generally required. This high power application use interleaved PFC stages, where may reduce inductor size, input and output capacitors ripple current. In overall, power components are smaller include capacitors. The NCP1632 as voltage mode IC for interleaved PFC applications used in conduction critical mode. It drives two mosfets 180° phase shifted. The most important at design should be focused significant inductance value of selected PFC coils. It significantly specifies working range.

Figure 6 depicts schematic from rectifier input to DC link output. *Activation of stage (connection to 15 V DC power supply) is via J2 (soldered pads).*

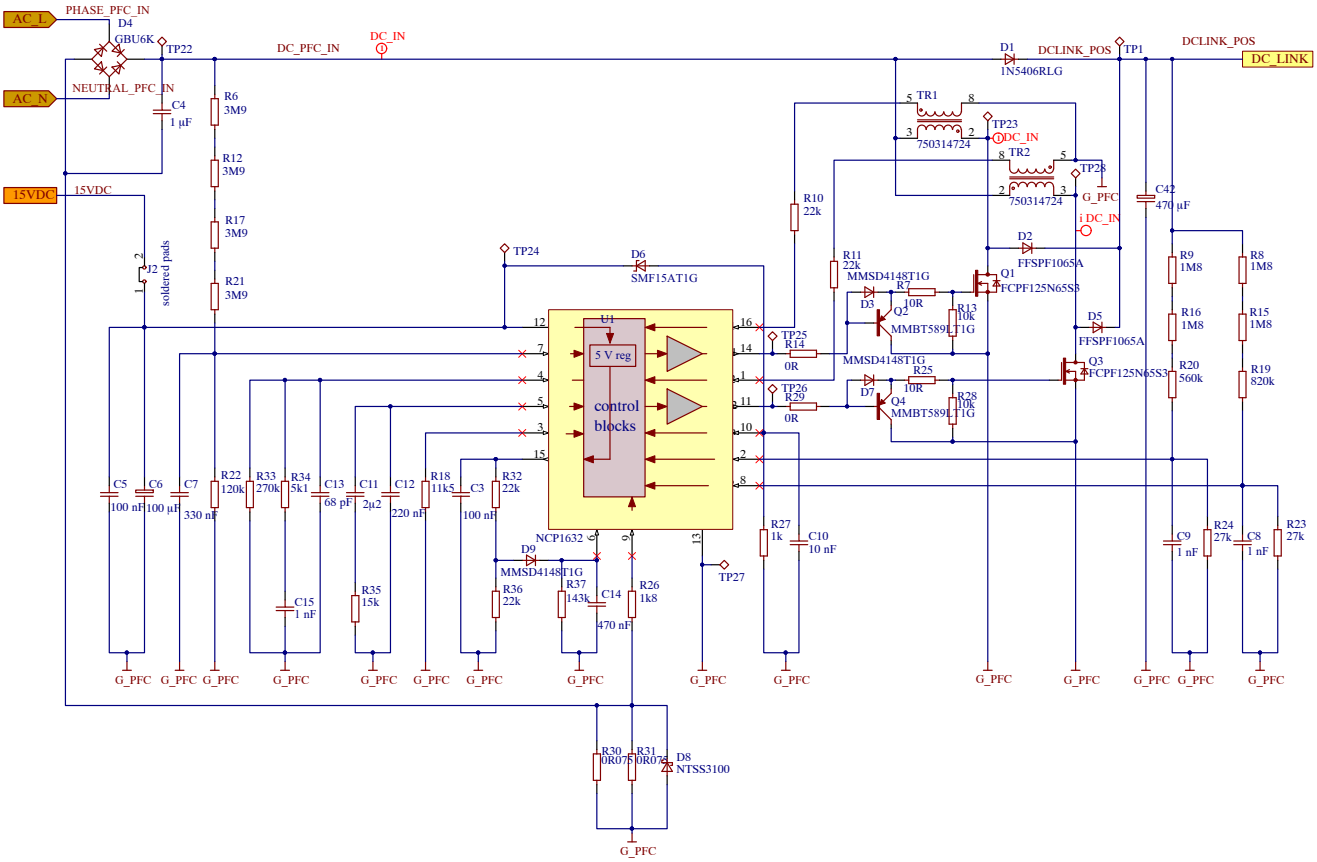

Figure 6. Schematic of interleaved PFC stage

Downloaded from Arrow.com.

Basic tests and measurements were done. The results of efficiency, power factor, power losses, load transients and startup can be seen in the Figures 7–13. The used load was Halogen light bulb.

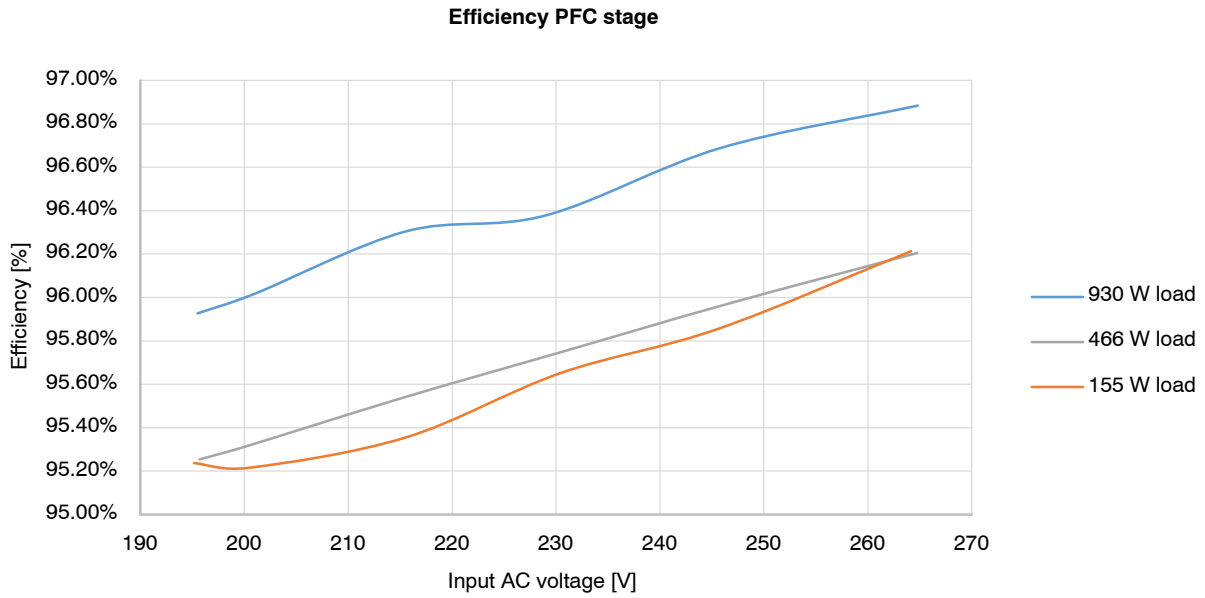

Figure 7. Efficiency of PFC Stage for Various Value of Input AC Voltage and Load

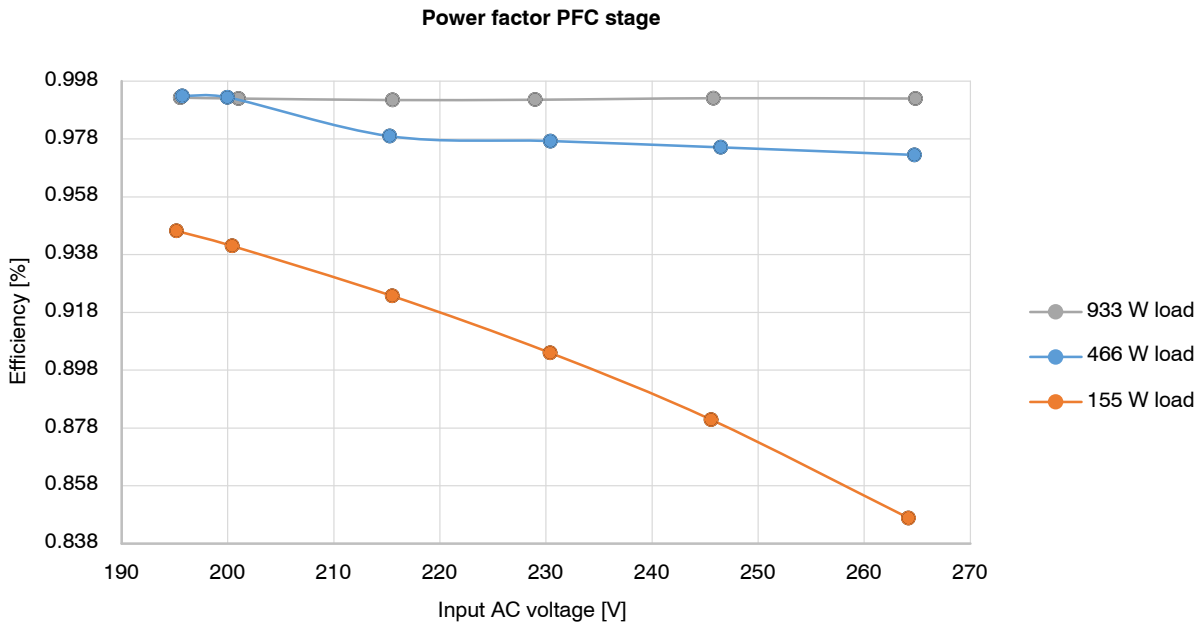

Figure 8. Power Factor of PFC Stage for Various Value of Input AC Voltage and Load

Downloaded from Arrow.com.

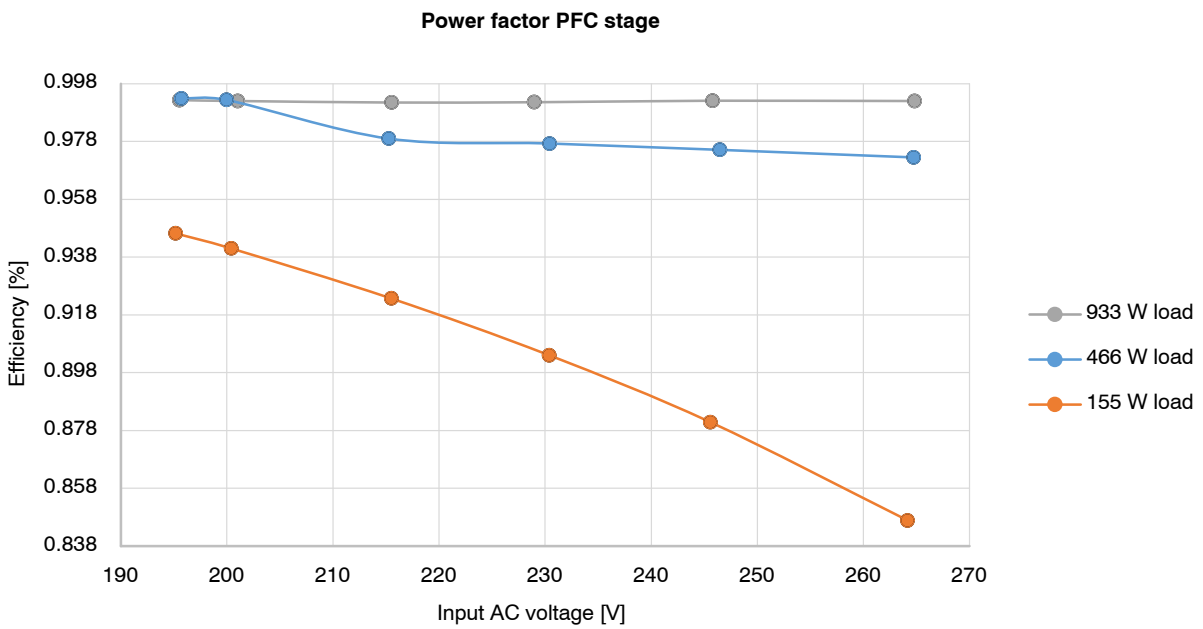

Figure 9. Power Losses of PFC Stage for Various Value of Input AC Voltage and Load

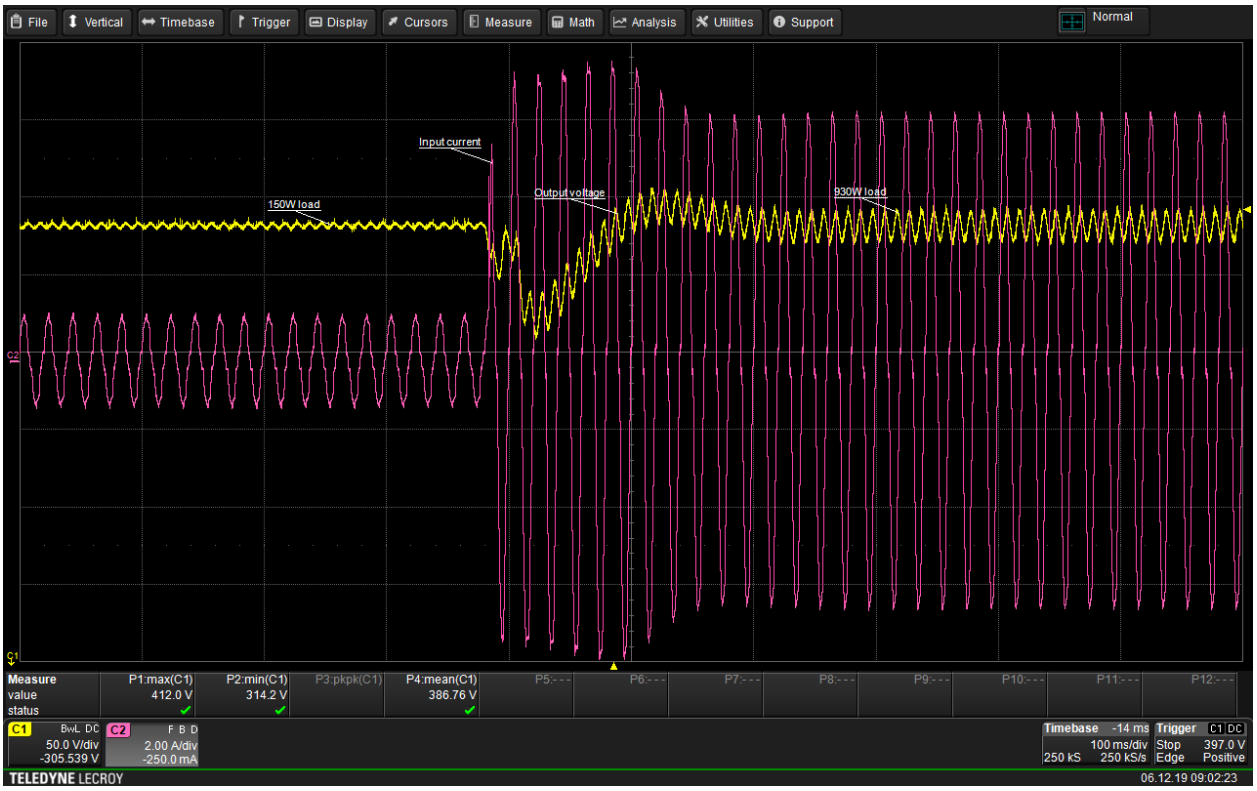

Figure 10. Load Transient 155 W to 930 W at 230 V AC Input

Downloaded from Arrow.com.

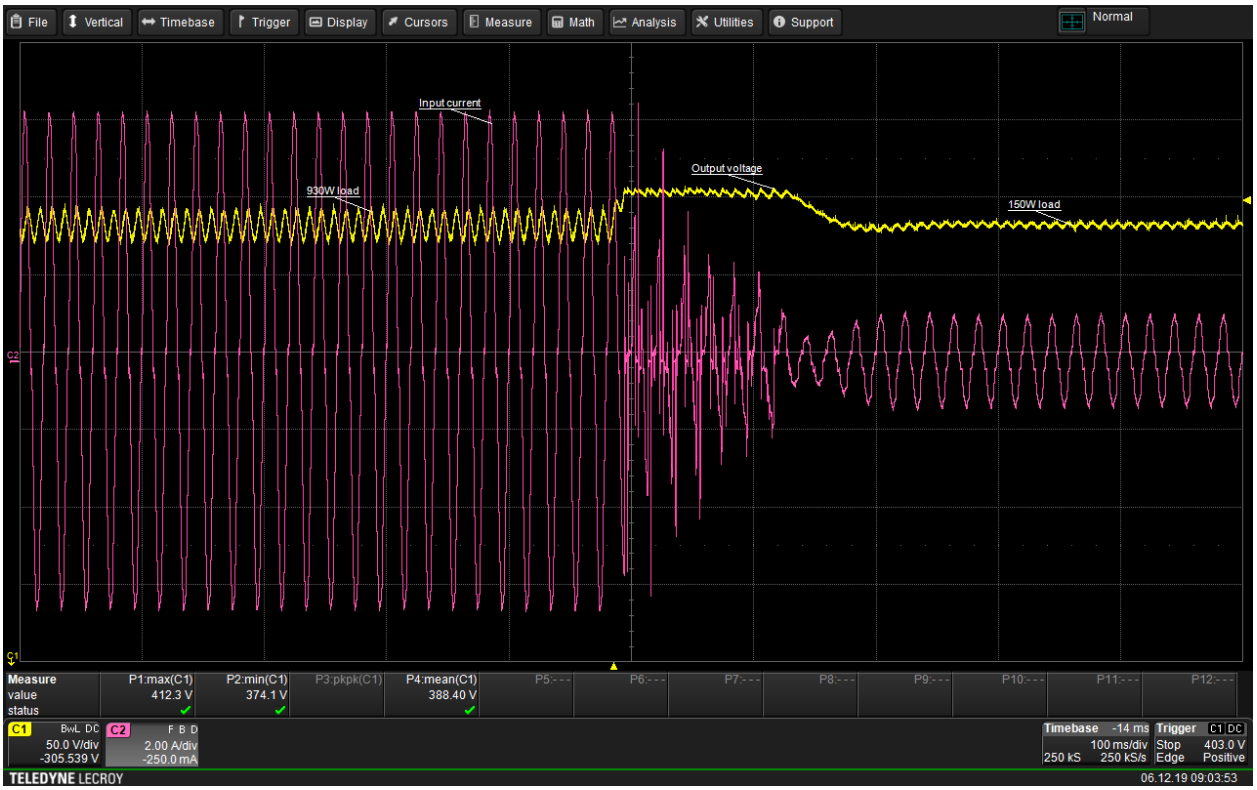

Figure 11. Load Transient 930 W to 155 W at 230 V AC Input

Figure 12. Start up to Open Circuit, 155 W and 930 W at 230 V AC Input

Downloaded from Arrow.com.

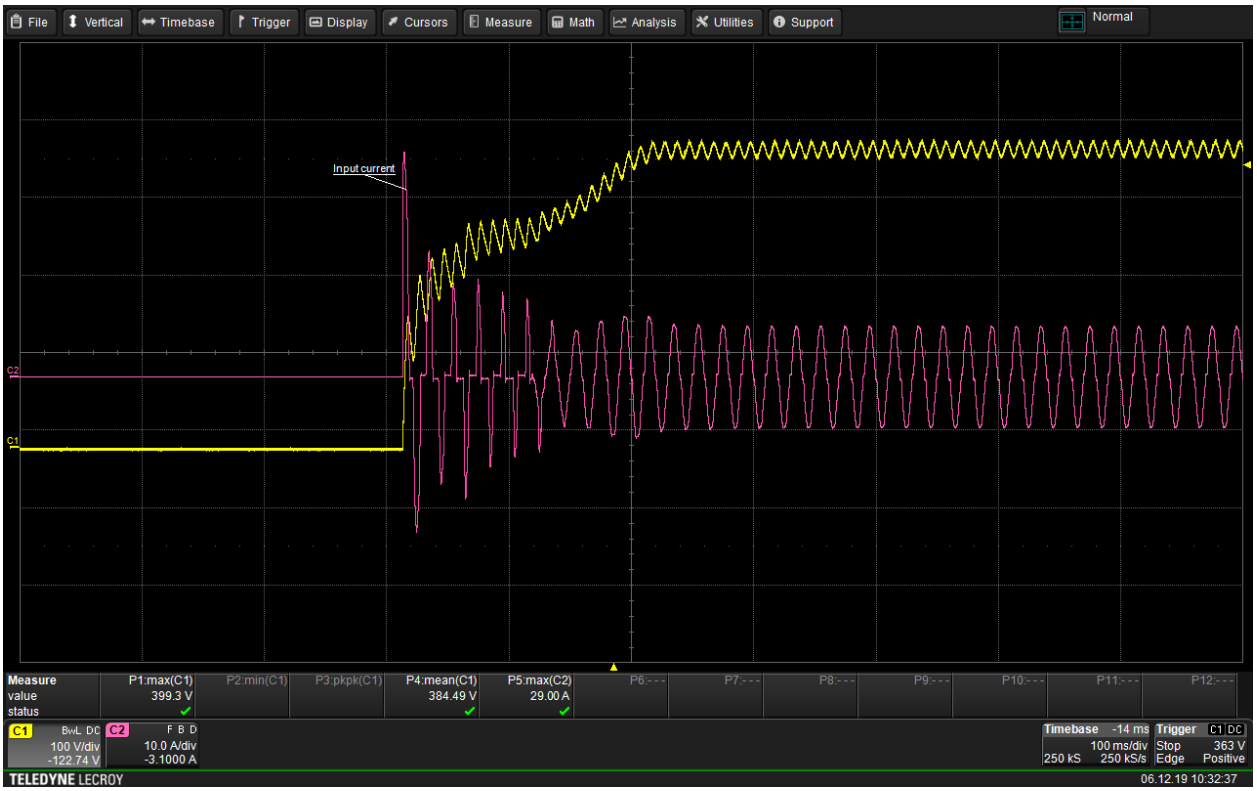

Figure 13. Start to 930 W at 230 V AC Input, Inrush Current

Downloaded from Arrow.com.

Auxiliary 15 V Power Supply

The NCP1063 is used as converter 390 V to 15 V output to supply PFC, IPM and Control board (Arduino Due). The maximal power delivered is up to 4.6 W. Figure 14 depicts schematic of 15 V auxiliary power supply. Figure 15 shows startup of the converter.

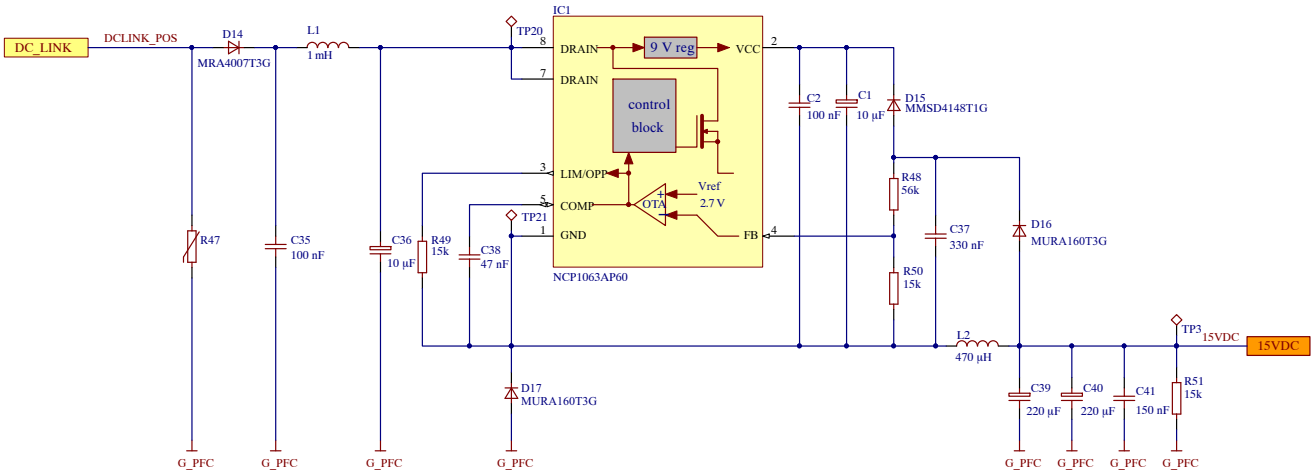

Figure 14. Schematic of Auxiliary 15V Power Supply

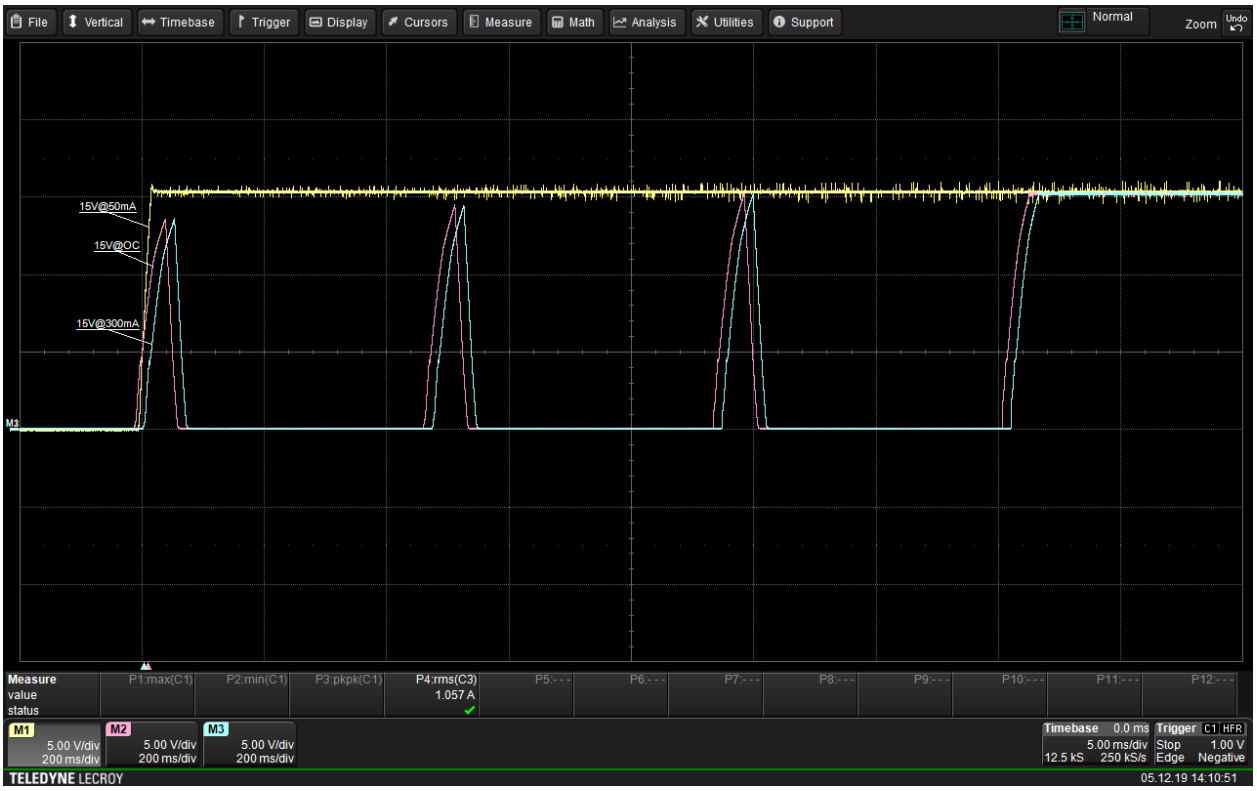

Figure 15. Start Up to Open Circuit, to 50 mA and to 300 mA at 390 V DC Input

Downloaded from Arrow.com.

IPM Stage

This stage uses NFAQ1060L36T IPM for 3−phase motor drives containing three−phase inverter, gate drivers for the inverter and a thermistor. It uses **onsemi**'s Insulated Metal Substrate (IMS) Technology. Very important function is over−current protection which is deeply described in chapter – Current Measurement and Over−Current Protection. Module also contains fault pin which is keeping high level during normal state. *Activation of IPM stage (connection to 15 V DC power supply) is via J1 (soldered pads)*. In the figure 15 is shown schematics of IPM stage also with DC link voltage measurement (voltage divider containing R46, R52, R53 and R55). Signals from 39 mΩ shunt resistors are going to current measurement and over−current protection circuits.

Downloaded from Arrow.com.

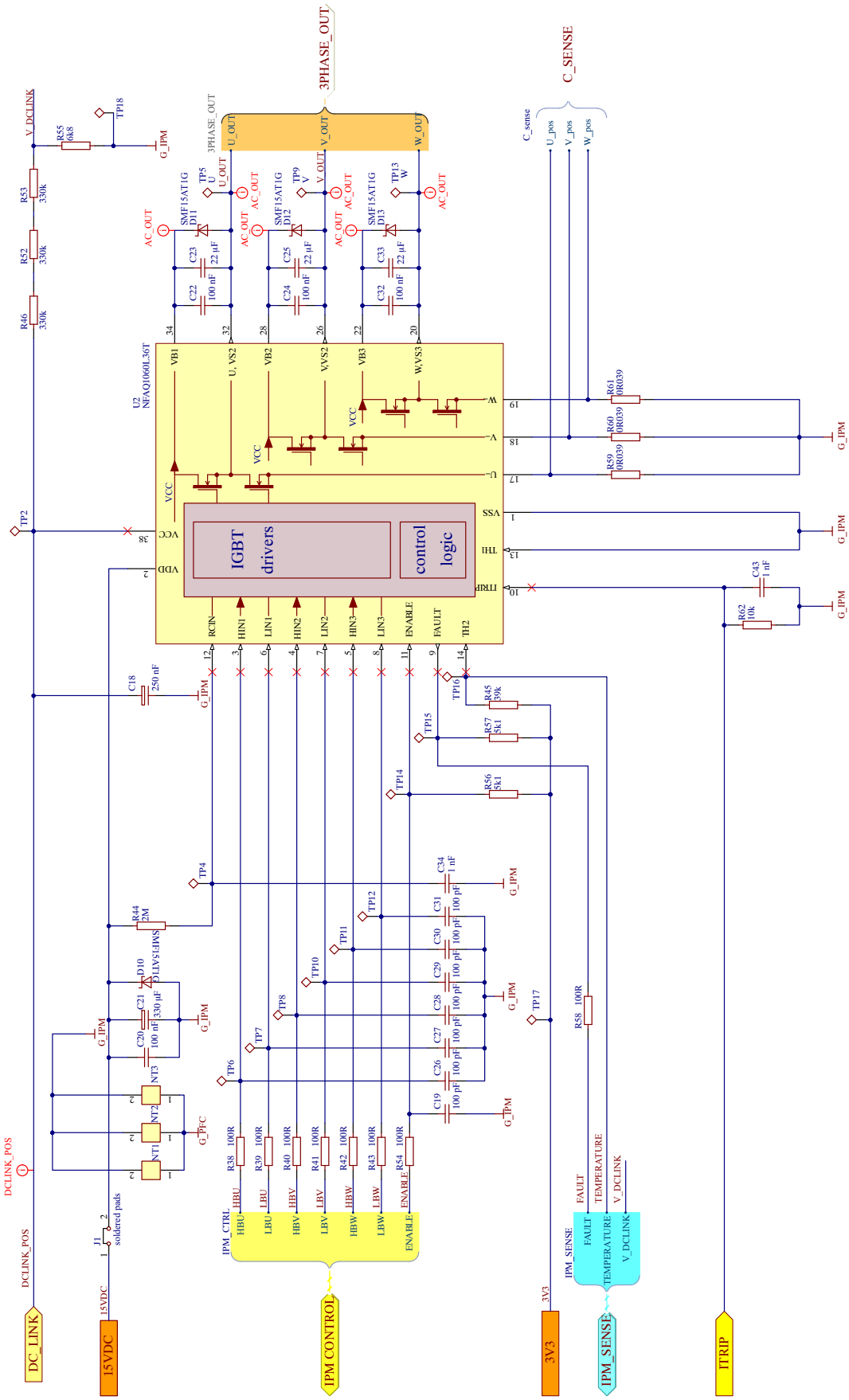

Figure 16. Schematic of IPM Stage

Downloaded from Arrow.com.

Current Measurement and Over−Current Protection

Schematic of current measurement and over−current protection can be seen in the Figure 17. Information about currents is provided via 39 mΩ shunt resistors. Voltage drop from shunt resistor is going to input of operational amplifier (op−amp) NCS2003 which gain is set to 4.99 with 1k resistor and 4k99 resistor connected as negative feedback. U7 (TLV431) is creating 1.65 V reference which is connected to non−inverting input of op−amps. This connection provides voltage offset at the output of op−amps, which is needed for negative current measurement.

Overcurrent protection is offered by NCS2250 comparator. Comparator threshold is set by voltage divider which consists of R68, R71 and C48. Signals from shunt resistors are going via R78, R81 and R84 connected to non−inverting input. These resistors together with C58 are also acting as low pass filter for high frequency signals interference. On the one hand, with insufficient filtering the over− current protection can react for lower values of current even if there is 350 ns blanking time on ITRIP pin of IPM to improve noise immunity (see datasheet of IPM). On the other hand, when we are designing this filter it is needed to be careful about the maximal time constant value according short circuit safe operating area (see datasheet of IPM, NFAQ1060L36T− for V_{CE} = 400 V is 4 µs). Output from comparator is connected to ITRIP pin of IMP module. As was mentioned in previous chapter, IPM has fault pin and its voltage level is high during normal state. An over−current condition is detected if the voltage on the ITRIP pin is larger than the reference voltage (typically 0.5 V). After a shutdown propagation delay of typically 1.1 µs, the FAULT output is switched on. The FAULT output is held on for a time determined by the resistor and capacitor connected to the RCIN pin (IPM pin 12). If R44 = 2 MΩ and C34 = 1 nF, the FAULT output is switched on for 1.65 ms (typical). The over−current protection threshold should be set to be equal or lower to 2 times the module rated current. The reaction of the protection can be seen in the Figure 18 and 19. System is also using ENABLE pin of the IPM. After the over−current fault, fault signal is generated and sent to microcontroller which disable the IPM via ENABLE pin (programmed by user). New operation is possible after microcontroller reset.

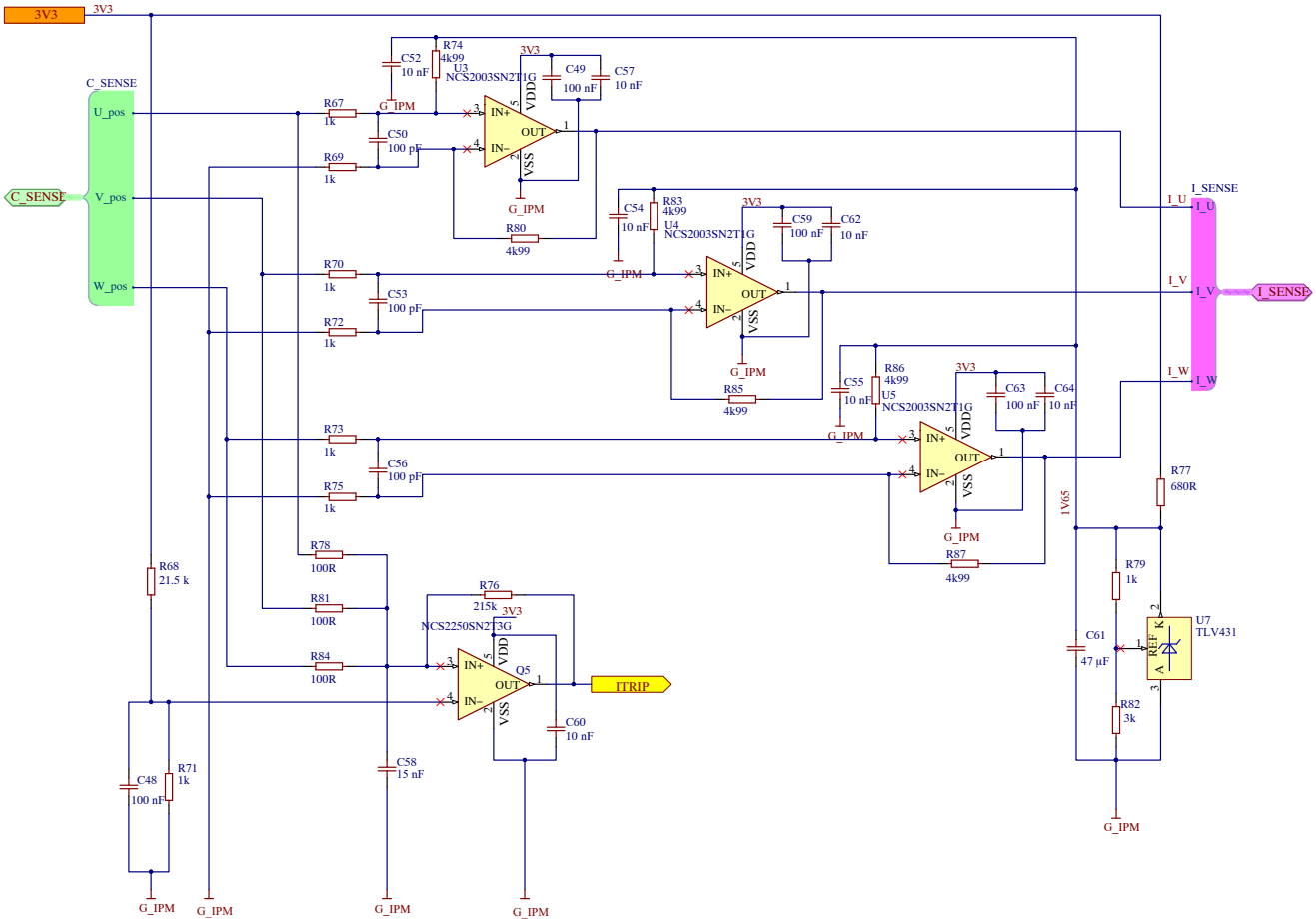

Figure 17. Schematic of Current Measurement and Overcurrent Protection

Downloaded from Arrow.com.

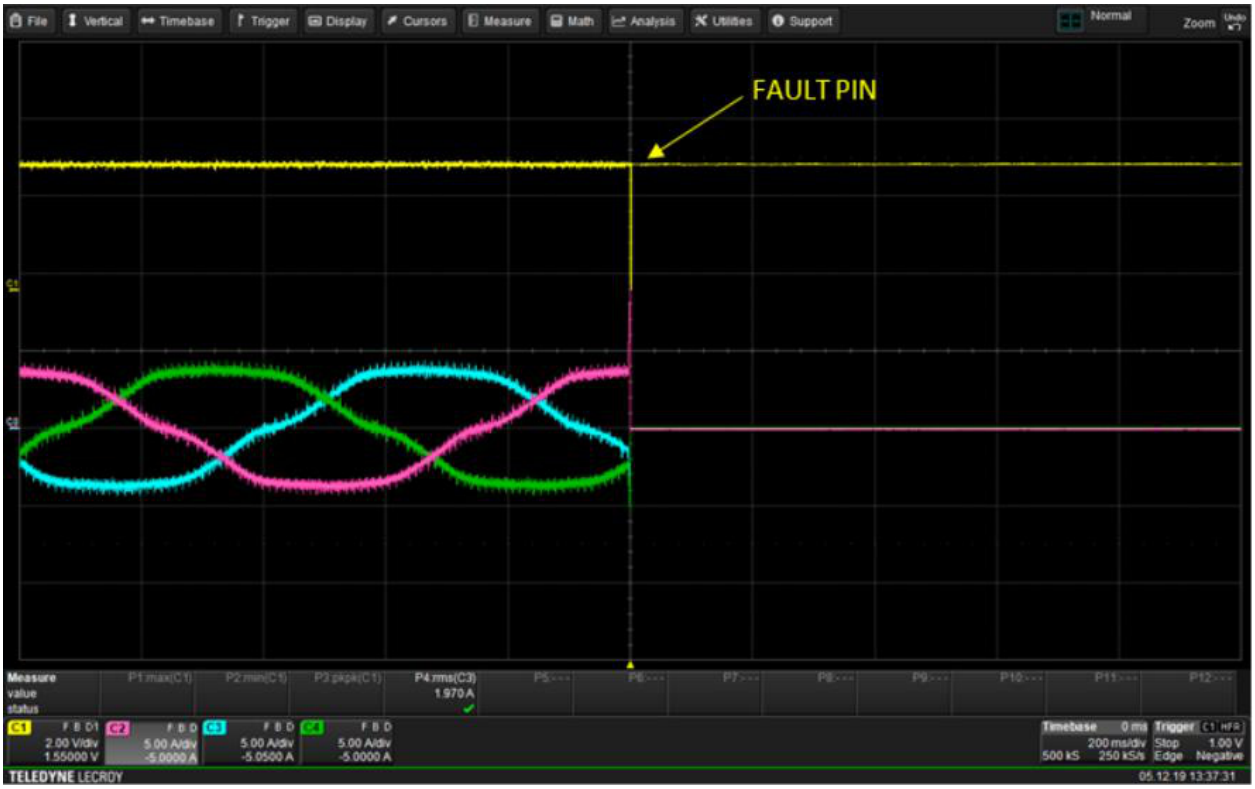

Figure 18. Reaction of Over−current Protection

Figure 19. Reaction of Over−current Protection − Detail

Downloaded from Arrow.com.

Control Board Headers

Schematic of control board headers can be seen in the Figure 20. The headers have Arduino Due footprint. The applied control board has to contain 3V3 power supply as it is also used for supplying current measurement op amps and comparator for over−current protection. Low pass filters for current and voltage measurement signals are placed closed to the headers (see CON4). *When connecting the control board to the PC, do not forget to use isolator.*

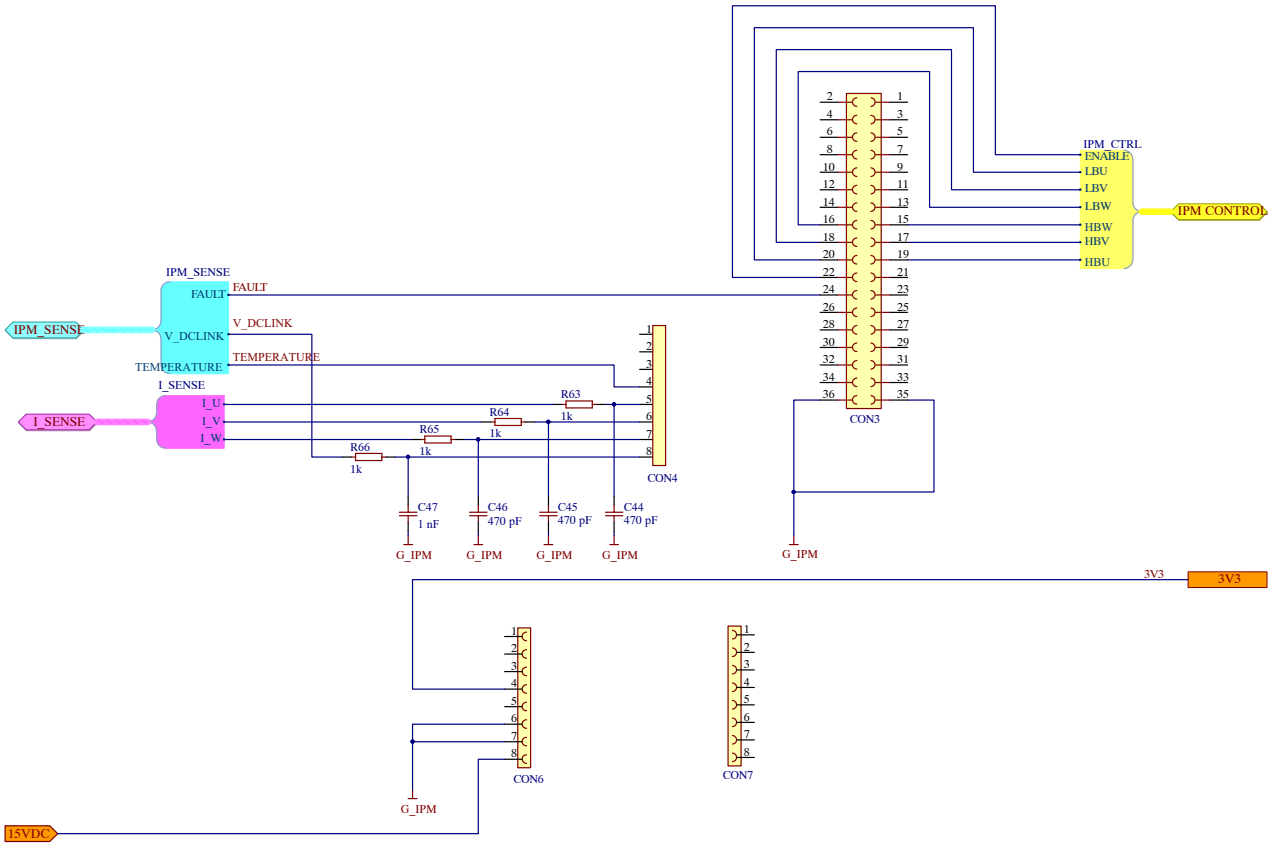

Figure 20. Schematic of Control Board Headers

Layout

Evaluation board consist of 4 layers. Following figures are showing all the layers. Board size is 280x112 mm.

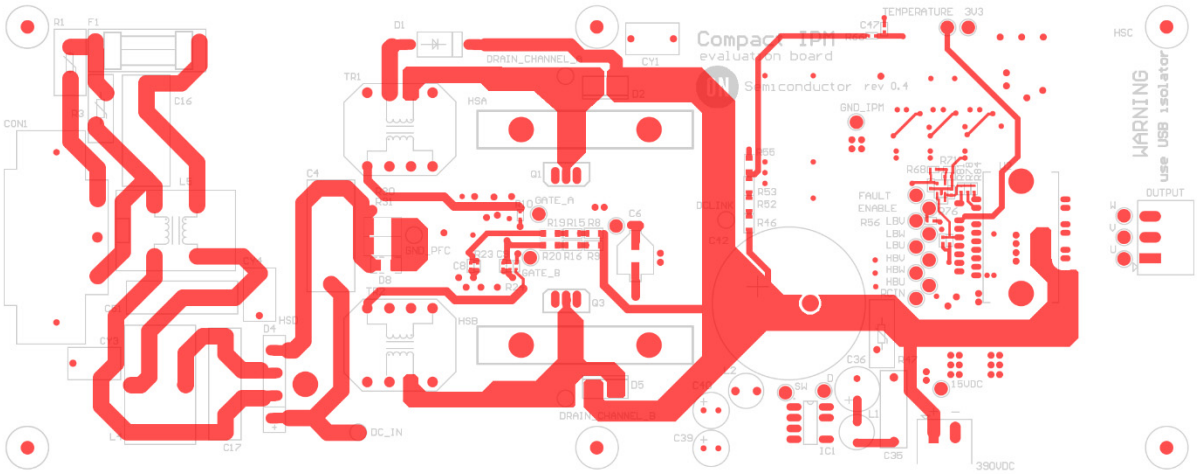

Figure 21. Top Layer Routing and Top Assembly

Downloaded from Arrow.com.

Figure 22. Internal Layer 1

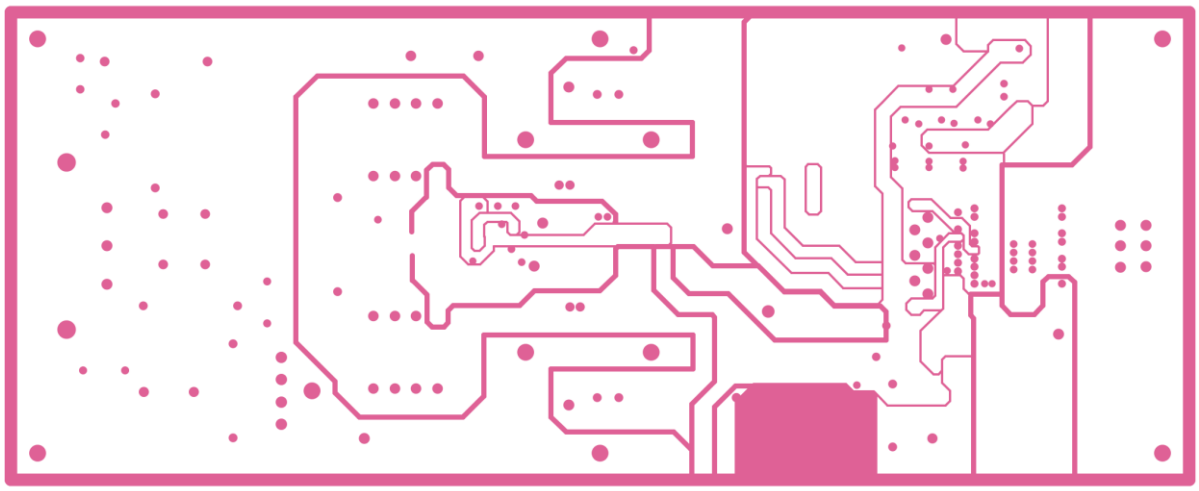

Figure 23. Internal Layer 2

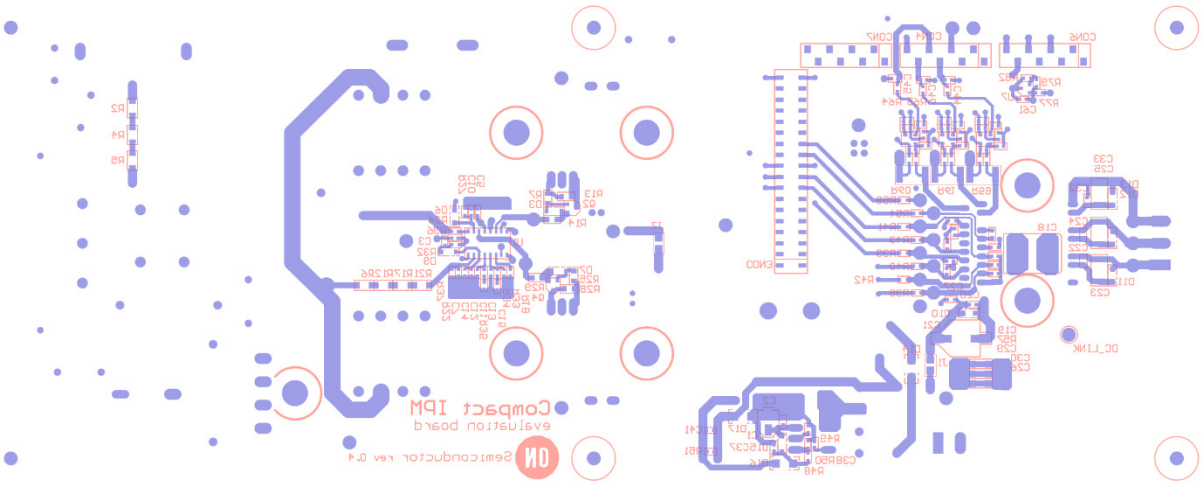

Figure 24. Bottom Layer Routing and Bottom Assembly

Downloaded from Arrow.com.

Software

FOC has been widely used during the last decade as an efficient way to control various types of motors over wide speed ranges. The controller optimizes the efficiency of the system as it produces the required motor torque with the lowest possible phase−currents, by maintaining a 90° angle between the rotor flux and current. Moreover, it provides fast dynamic response and a low current harmonic content. Numerous scientific and technical papers in literature describe thoroughly the FOC operation. We would like to note that the analysis of FOC falls beyond the scope of this document. For a more comprehensive description of FOC operation, the reader may refer to the corresponding references. [8]−[10].

UCB with Pre−flashed Firmware

(UCB acquired as part of SECO−1KW−MCTRL−GEVK)

If you acquired the UCB as part of the **onsemi** kit, the controller is already flashed with V/F control and FOC control. The user does not have to perform any further actions for booting. It is noted however, that booting from the flash, the SD−socket at UCB should be empty. With the flashed controller, the user can control the motor via the graphical user interface (GUI) of Figure 25. Download and install Strata Developer Studio to access the GUI. Once this step is done, UCB can be connected and powered up, Strata Developer Studio will detect the board automatically and display the board as connected.

To open the GUI, click *Hardware controls* next to the connected board. With the GUI, the user can select between the V/F and FOC strategy. The GUI also assists the end−user to configure and tune the foremost V/F and FOC parameters, while it also provides visual representation of key electrical variables, such as the DC−Link voltage and temperature of IPM, the RMS value of the inverter output current and voltage, and the motor speed.

Rewriting Flash Memory or SD−card Image

(Important when UCB not acquired as part of the SECO−1KW−MCTRL−GEVK)

In case the user wants to rewrite the flash memory with the default V/F−FOC control, he can use the boot−image and fsbl.elf files that are accessible via the link in [12]. To download the boot−image and fsbl.elf, click the link in [12] and download the latest version of software; boot−image and fsbl.elf files are included in the UCB_firmware of the downloaded software file.

The following guide contains material on how to load the boot image:

- Flashing QSPI memory [11] (link)

To boot from SD card, copy the boot image that is found in [12] into the root directory of the SD card. Then place the SD card into the SD socket of UCB. Upon power−up the UCB will automatically boot from the SD card.

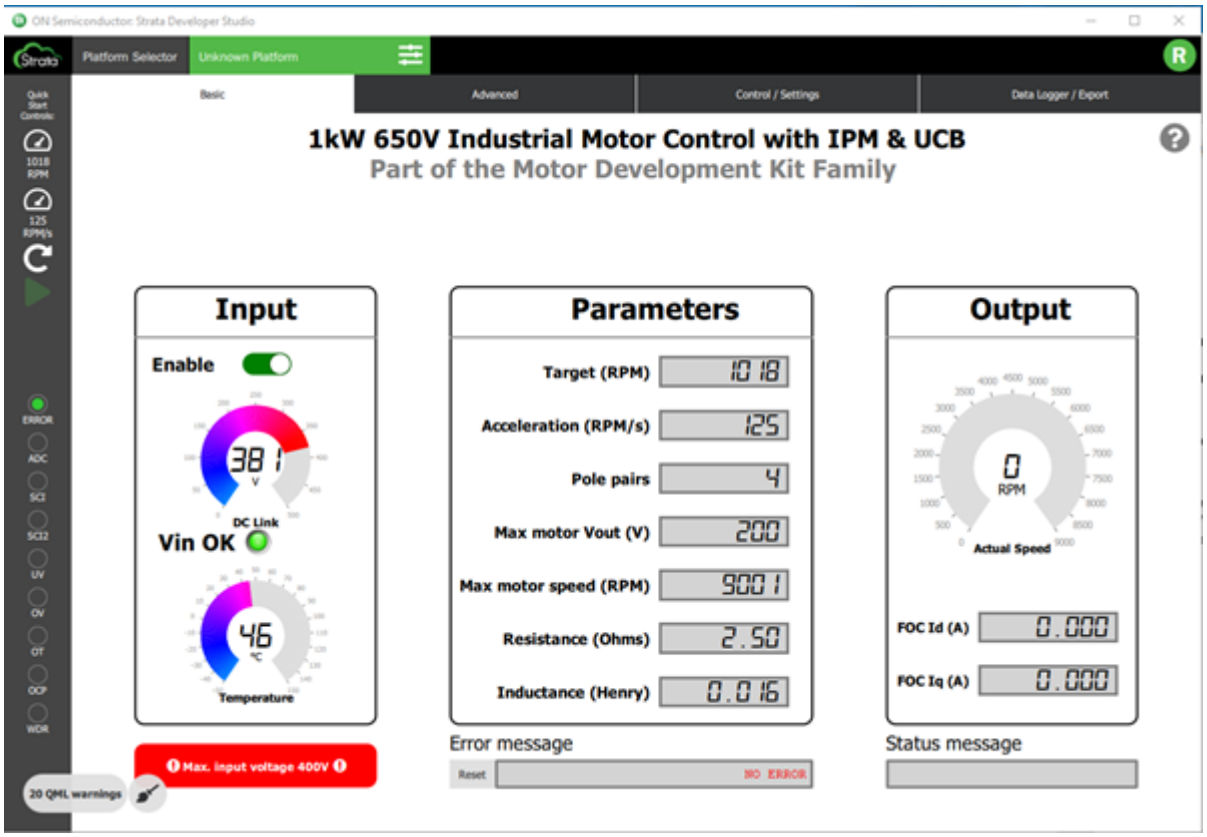

Figure 25. Graphical User Interface (GUI) in Strata Developer Studio

Downloaded from Arrow.com.

Electromagnetic Compatibility

Due to the inherent high frequency common mode noise generated by the power switches, it is strongly recommended to install a ferrite clamp on the motor wires. This will prevent disturbing other electronic devices in the vicinity, including the UCB.

The recommended CM filter setup is depicted in the picture below.

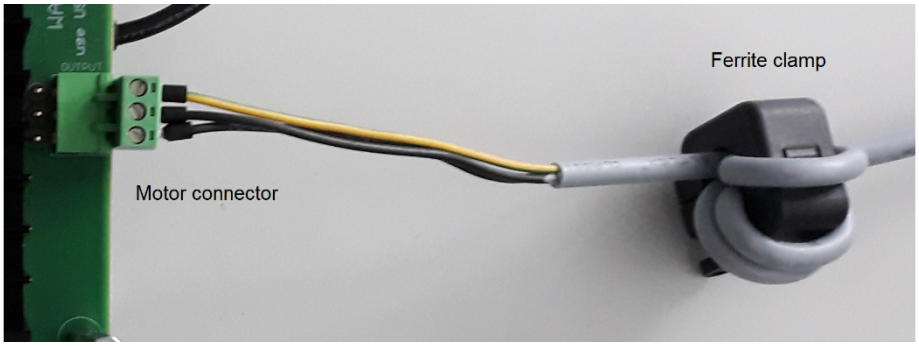

Figure 26. Recommended EMC Filter

USB Isolator

During the communication with control board and PC, using of USB isolator is very important because of safety.

In the Figure 27 can be seen evaluation board with USB isolator (5 kV optical isolation).

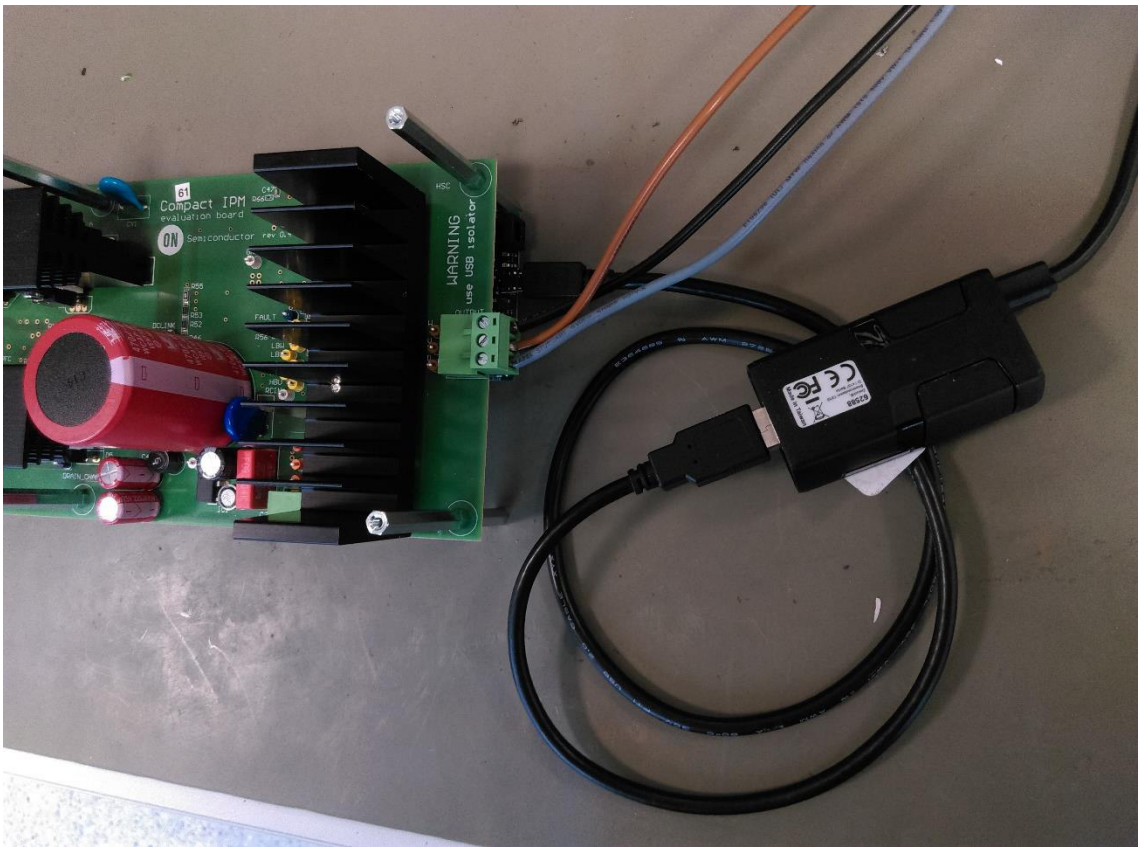

Figure 27. Evaluation Board with Control Board and USB Isolator

Downloaded from Arrow.com.

Bill of Materials

Table 3 provides bill of materials of the evaluation board.

Table 3. BILL OF MATERIALS OF THE EVALUATION BOARD

No.	Designator	Comment	Manufacturer	Part number	Quantity
1.	C1	10 μF	Würth Electronik	865080540004	1
2.	C2	100 nF	Würth Electronik	885012206071	1
3.	C3, C5	100 nF	Würth Electronik	885012206095	2
4.	C4, C16	1 μF	Würth Electronik	890334026027CS	2
5.	C6	100 μF	Würth Electronik	875115652007	1
6.	C7	330 nF	Murata	GRM188R71C334JA01D	1
7.	C8, C9	1 nF	Würth Electronik	885012006044	2
8.	C10, C52, C54, C55, C57, C62, C64	10 nF	Würth Electronik	885012206089	7
9.	C11	2μ2	Würth Electronik	885012206027	1
10.	C12	220 nF	Murata	GRM188R71H224KAC4D	1
11.	C13	68 pF	Murata	GRM1885C1H680JA01D	1
12.	C14	470 nF	Murata	GRM188R61H474KA12D	1
13.	C15	1 nF	Würth Electronik	885012006063	1
14.	C17, C51	680 nF	Würth Electronik	890334026020CS	2
15.	C18	250 nF	TDK	B58031I9254M062	1
16.	C19, C26, C27, C28, C29, C30, C31, C50, C53, C56	100 pF	Würth Electronik	885012006057	10
17.	C20	100 nF	Würth Electronik	885012207072	1
18.	C21	330 μF	Würth Electronik	875075661010	1
19.	C22, C24, C32	100 nF	Würth Electronik	885012105018	3
20.	C23, C25, C33	22 μF	TDK	C4532X7R1E226M250KC	3
21.	C34, C43, C47	1 nF	Würth Electronik	885012206083	3
22.	C35	100 nF	Würth Electronik	890334025017CS	1
23.	C36	10 μF	Rubycon	450BXF10M10X16	1
24.	C37	330 nF	Würth Electronik	885012207101	1
25.	C38	47 nF	Würth Electronik	885012206093	1
26.	C39, C40	220 μF	Würth Electronik	860040474004	2
27.	C41	150 nF	Murata	GRM188R71H154KAC4D	1
28.	C42	470 μF	Würth Electronik	861141486024	1
29.	C44, C45, C46	470 pF	Würth Electronik	885012006061	3
30.	C48, C49, C59, C63	100 nF	Wurth Electronics	885012206046	4
31.	C58	15 nF	Würth Electronik	885012206090	1
32.	C60	10 nF	Würth Electronik	885012206065	1
33.	C61	47 μF	Murata	GRM188R60J476ME15D	1
34.	CON1	Black	TE Connectivity	6ESRM−P	1
35.	CON2	Green	Würth Elektronik	691313710003	1
36.	CON3	610 036 218 21	Würth Elektronik	61003621821	1

Downloaded from Arrow.com.

Table 3. BILL OF MATERIALS OF THE EVALUATION BOARD

No.	Designator	Comment	Manufacturer	Part number	Quantity
37.	CON4, CON6, CON7	610 008 13 321	Würth Elektronik	61000813321	3
38.	CON5	691 313 510 002	Würth Elektronik	691313510002	1
39.	CY1, CY3, CY4	4700 pF	Murata	DE1E3KX472MA4BN01F	3
40.	D1	1N5406RLG	**onsemi**	1N5406RLG	1
41.	D2, D5	FFSPF1065A	**onsemi**	FFSPF1065A	2
42.	D3, D7, D9, D15	MMSD4148T1G	**onsemi**	MMSD4148T1G	4
43.	D4	GBU6K	**onsemi**	GBU6K	1
44.	D6, D10, D11, D12, D13	SMF15AT1G	**onsemi**	SMF15AT1G	5
45.	D8	NTSS3100	**onsemi**	NTSS3100T3G	1
46.	D14	MRA4007T3G	**onsemi**	MRA4007T3G	1
47.	D16, D17	MURA160T3G	**onsemi**	MURA160T3G	2
48.	F1	10 A	Schurter	0031.8201	1
49.	F2	4 A	Schurter	0034.3123	1
50.	FC1	Fuse cover	Schurter	0853.0551	1
51.	HSA, HSB	SK 489 50 mm black anodized			2
52.	HSC	SK 92 30 mm natural anodized			1
53.	HSD	SK 447 37.5 mm black anodized			1
54.	IC1	NCP1063AP60	**onsemi**	NCP1063AP60G	1
55.	J_AC_OUT	691 351 500 003	Würth Elektronik	691351500003	1
56.	J_DC390V	691 351 500 002	Würth Elektronik	691351500002	1
57.	L1	1 mH	Würth Elektronik	744731102	1
58.	L2	470 μH	Würth Elektronik	744731471	1
59.	L4	150 μH	Würth Elektronik	7447076	1
60.	L5	2 x 2.2 mH	Würth Elektronik	744824622	1
61.	NAC1, NAC2	nut M3 ISO4032			2
62.	Q1, Q3	FCPF125N65S3	**onsemi**	FCPF125N65S3	2
63.	Q2, Q4	MMBT589LT1G	**onsemi**	MMBT589LT1G	2
64.	Q5	NCS2250SN2T3G	**onsemi**	NCS2250SN2T3G	1
65.	R1	2R2	TDK	B57237S0229M000	1
66.	R2, R4, R5	680k	Vishay	CRCW1206680KFKEA	3
67.	R3, R47	320 V	TDK	B72214S0321K101	2
68.	R6, R12, R17, R21	3M9	Vishay	CRCW12063M90FKEA	4
69.	R7, R25	10R	Panasonic	ERJ6ENF10R0V	2
70.	R8, R9, R15, R16	1M8	Vishay	CRCW12061M80FKEA	4
71.	R10, R11, R32, R36	22k	Panasonic	ERJ3EKF2202V	4
72.	R13, R28	10k	Panasonic	ERJ6ENF1002V	2
73.	R14, R29	0R	Panasonic	ERJ6GEY0R00V	2
74.	R18	11k5	Panasonic	ERJ3EKF1152V	1

Downloaded from Arrow.com.

Table 3. BILL OF MATERIALS OF THE EVALUATION BOARD

No.	Designator	Comment	Manufacturer	Part number	Quantity
75.	R19	820k	Panasonic	ERJU08F8203V	1
76.	R20	560k	Panasonic	ERJU08F5603V	1
77.	R22	120k	Panasonic	ERJ3EKF1203V	1
78.	R23, R24	27k	Panasonic	ERJ3EKF2702V	2
79.	R26	1k8	Panasonic	ERJ3EKF1801V	1
80.	R27, R63, R64, R65, R71, R79	1k	Panasonic	ERJ3EKF1001V	6
81.	R30, R31	0R075	Bourns	CRA2512−FZ−R075ELF	2
82.	R33	270k	Panasonic	ERJ3EKF2703V	1
83.	R34, R56, R57	5k1	Panasonic	ERJ3EKF5101V	3
84.	R35, R49, R50, R51	15k	Panasonic	ERJ3EKF1502V	4
85.	R37	143k	Panasonic	ERJ3EKF1433V	1
86.	R38, R39, R40, R41, R42, R43, R54, R58, R78, R81, R84	100R	Panasonic	ERJ3EKF1000V	11
87.	R44	2M	Vishay	CRCW06032M00FKEA	1
88.	R45	39k	Panasonic	ERJ3EKF3902V	1
89.	R46, R52, R53	330k	Vishay	CRCW1206330KFKEA	3
90.	R48	56k	Panasonic	ERJ3EKF5602V	1
91.	R55	6k8	Panasonic	ERJP08F6801V	1
92.	R59, R60, R61	0R039	KOA SPEER ELECTRONICS	TLRH3AWTTE39L0F	3
93.	R62	10k	Panasonic	ERJ3EKF1002V	1
94.	R66, R67, R69, R70, R72, R73, R75	1k	Panasonic	ERJ3RBD1001V	7
95.	R68	21k5	Panasonic	ERJ3EKF2152V	1
96.	R74, R80, R83, R85, R86, R87	4k99	TT Electronics	PCF0603R−4K99BT1	6
97.	R76	215k	Panasonic	ERJ3EKF2153V	1
98.	R77	680R	Panasonic	ERJ3EKF6800V	1
99.	R82	3k	Panasonic	ERJ3EKF3001V	1
100.	SAC1, SAC2, SHA1, SHA2, SHB1, SHB2, SHD1	M3x8 DIN7985			7
101.	SB1, SB2, SB3, SB4, SB5, SB6	Spacer M3 F/F 50 HEX7			6
102.	SDA, SDB, SDD, SHC1, SHC2, SQA, SQB	M3x16 DIN7985			7
103.	SHSA1, SHSA2, SHSB1, SHSB2	spacer for M3	Wurth Elektronik	963030042	4
104.	ST1, ST2, ST3, ST4, ST5, ST6	Spacer M3 M/F 6/30 HEX7			6
105.	TP1, TP2	RED	Keystone Electronics	5005	2

Downloaded from Arrow.com.

Table 3. BILL OF MATERIALS OF THE EVALUATION BOARD

No.	Designator	Comment	Manufacturer	Part number	Quantity
106.	TP3, TP17, TP24	ORANGE	Keystone Electronics	5008	3
107.	TP4, TP18, TP21	WHITE	Keystone Electronics	5007	3
108.	TP5, TP9, TP13, TP22	BROWN	Keystone Electronics	5120	4
109.	TP6, TP7, TP8, TP10, TP11, TP12, TP14, TP25, TP26	YELLOW	Keystone Electronics	5009	9
110.	TP15, TP16	BLUE	Keystone Electronics	5122	2
111.	TP20, TP23, TP28	PURPLE	Keystone Electronics	5124	3
112.	TP27	BLACK	Keystone Electronics	5006	1
113.	TR1, TR2	750314724	Würth Elektronik	750314724	2
114.	U1	NCP1632	**onsemi**	NCP1632DR2G	1
115.	U2	NFAQ1060L36T	**onsemi**	NFAQ1060L36T	1
116.	U3, U4, U5	NCS2003SN2T1G	**onsemi**	NCS2003SN2T1G	3
117.	U7	TLV431	**onsemi**	TLV431CSN1T1G	1
118.	WAC1, WAC2, WHSA1, WHSA2, WHSB1, WHSB2, WPDA, WPDB, WPDD, WPQA, WPQB, WSHC1, WSHC2, WSHD1	plain washer M3 DIN125A			14
119.	WHAD, WHAQ, WHBD, WHBQ	AOS 220 18x12x1.5 D3.1			4
120.	WSDA, WSDB, WSDD, WSQA, WSQB	spring washer M3 DIN7980			5

Table 4. BILL OF MATERIALS OF THE UCB ADAPTER

No.	Designator	Comment	Manufacturer	Part number	Quantity
1.	C1	10 μF, 50 V	Wurth Elektronik	885012108022	1
2.	C2, C11, C12	10 μF, 10 V	Wurth Elektronik	885012107010	3
3.	C3	100 μF, 25 V	Wurth Elektronik	865080449011	1
4.	C4, C5	100 nF, 16 V	Wurth Elektronik	885012206046	2
5.	C15, C21	10 nF, 50 V	Wurth Elektronik	885012206089	2
6.	C16	470 nF, 50 V	Wurth Elektronik	885012207102	1
7.	C19, C20	22 μF, 10 V	Wurth Elektronik	885012209006	2
8.	C23	470 pF, 50 V	Wurth Elektronik	885012006061	1
9.	D1, D2, D3, D4, D5, D6, D7, D8, D9, D10	BAT54S	**onsemi**	BAT54S	10
10.	D11, D12	MBR230LSFT1G	**onsemi**	MBR230LSFT1G	2
11.	D13	MBRS2040LT3G	**onsemi**	MBRS2040LT3G	1
12.	J1	61001011921	Wurth Elektronik	61001011921	1
13.	J2, J3, J5, J6, J7	61000811921	Wurth Elektronik	61000811921	5
14.	J4	61003621821	Wurth Elektronik	61003621821	1

Downloaded from Arrow.com.

Table 4. BILL OF MATERIALS OF THE UCB ADAPTER

No.	Designator	Comment	Manufacturer	Part number	Quantity
15.	J8	61000621821	Wurth Elektronik	61000621821	1
16.	J9	694106105102	Wurth Elektronik	694106105102	1
17.	JB1, JB2	10139781−121402LF	Amphenol	10139781−121402LF	2
18.	L1	22 μH, 3 A	Wurth Elektronik	7447714220	1
19.	R1, R6	0R			2
20.	R3	0R			1
21.	R4	270R			1
22.	R5	560R			1
23.	R7, R8	470R			2
24.	R45	22k			1
25.	R46	3k			1
26.	R47	56k			1
27.	U1	FAN8303MX	**onsemi**	FAN8303MX	1
28.	U2	NCP1117ST33T3G	**onsemi**	NCP51460SN33T1G	1
29.	U3	NCP1117ST50T3G	**onsemi**	NCP1117ST50T3G	1
30.	C1	10 μF, 50 V	Wurth Elektronik	885012108022	1
31.	C2, C11, C12	10 μF, 10 V	Wurth Elektronik	885012107010	3
32.	C3	100 μF, 25 V	Wurth Elektronik	865080449011	1
33.	C4, C5	100 nF, 16 V	Wurth Elektronik	885012206046	2
34.	C15, C21	10 nF, 50 V	Wurth Elektronik	885012206089	2
35.	C16	470 nF, 50 V	Wurth Elektronik	885012207102	1
36.	C19, C20	22 μF, 10 V	Wurth Elektronik	885012209006	2
37.	C23	470 pF, 50 V	Wurth Elektronik	885012006061	1
38.	D1, D2, D3, D4, D5, D6, D7, D8, D9, D10	BAT54S	**onsemi**	BAT54S	10
39.	D11, D12	MBR230LSFT1G	**onsemi**	MBR230LSFT1G	2
40.	D13	MBRS2040LT3G	**onsemi**	MBRS2040LT3G	1
41.	J1	61001011921	Wurth Elektronik	61001011921	1
42.	J2, J3, J5, J6, J7	61000811921	Wurth Elektronik	61000811921	5
43.	J4	61003621821	Wurth Elektronik	61003621821	1
44.	J8	61000621821	Wurth Elektronik	61000621821	1
45.	J9	694106105102	Wurth Elektronik	694106105102	1
46.	JB1, JB2	10139781−121402LF	Amphenol	10139781−121402LF	2
47.	L1	22 μH, 3 A	Wurth Elektronik	7447714220	1
48.	R1, R6	0R			2
49.	R3	0R			1
50.	R4	270R			1
51.	R5	560R			1
52.	R7, R8	470R			2
53.	R45	22k			1
54.	R46	3k			1
55.	R47	56k			1
56.	U1	FAN8303MX	**onsemi**	FAN8303MX	1
57.	U2	NCP1117ST33T3G	**onsemi**	NCP51460SN33T1G	1
58.	U3	NCP1117ST50T3G	**onsemi**	NCP1117ST50T3G	1

Downloaded from Arrow.com.

REFERENCES

[1]. Datasheet of IPM NFAQ1060L36T, available on **onsemi** website

[2]. Datasheet of NCP1632, available on **onsemi** website

[3]. Application note – Key Steps to Design an Interleaved PFC Stage Driven by the NCP1632, available on **onsemi** website

[4]. Datasheet of NCP1063, available on **onsemi** website

[5]. Application note – Universal AC Input, 12V 0.35 A Output, 4.2 Watt Non−isolated Power Supply, available on **onsemi** website

[6]. Datasheet of NCS2003, available on **onsemi** website

[7]. Datasheet of NCS2250, available on **onsemi** website

[8]. J.A. Santisteban, R.M. Stephan, "Vector control methods for induction machines: an overview," *IEEE Transactions on Education*, Vol 44, no 2, pp−170−175, May 2001.

[9]. M. Ahmad, "High Performance AC Drives: Modelling Analysis and Control," published by *Springer−Verlag*, 2010.

[10]. J.R Hendershot, T.J.E. Miller, "Design of Brushless Permanent−Magnet Machines," published in the USA by *Motor Design Books LLC*, 2010.

[11]. Boot from flash

[12]. Boot/image download link

[13]. Strata Developer Studio

Downloaded from Arrow.com.

onsemi, onsemi, and other names, marks, and brands are registered and/or common law trademarks of Semiconductor Components Industries, LLC dba "**onsemi**" or its affiliates and/or subsidiaries in the United States and/or other countries. **onsemi** owns the rights to a number of patents, trademarks, copyrights, trade secrets, and other intellectual property. A listing of **onsemi**'s product/patent coverage may be accessed at www.onsemi.com/site/pdf/Patent−Marking.pdf. **onsemi** is an Equal Opportunity/Affirmative Action Employer. This literature is subject to all applicable copyright laws and is not for resale in any manner.

The evaluation board/kit (research and development board/kit) (hereinafter the "board") is not a finished product and is not available for sale to consumers. The board is only intended for research, development, demonstration and evaluation purposes and will only be used in laboratory/development areas by persons with an engineering/technical training and familiar with the risks associated with handling electrical/mechanical components, systems and subsystems. This person assumes full responsibility/liability for proper and safe handling. Any other use, resale or redistribution for any other purpose is strictly prohibited.

THE BOARD IS PROVIDED BY ONSEMI TO YOU "AS IS" AND WITHOUT ANY REPRESENTATIONS OR WARRANTIES WHATSOEVER. WITHOUT LIMITING THE FOREGOING, ONSEMI (AND ITS LICENSORS/SUPPLIERS) HEREBY DISCLAIMS ANY AND ALL REPRESENTATIONS AND WARRANTIES IN RELATION TO THE BOARD, ANY MODIFICATIONS, OR THIS AGREEMENT, WHETHER EXPRESS, IMPLIED, STATUTORY OR OTHERWISE, INCLUDING WITHOUT LIMITATION ANY AND ALL REPRESENTATIONS AND WARRANTIES OF MERCHANTABILITY, FITNESS FOR A PARTICULAR PURPOSE, TITLE, NON−INFRINGEMENT, AND THOSE ARISING FROM A COURSE OF DEALING, TRADE USAGE, TRADE CUSTOM OR TRADE PRACTICE.

onsemi reserves the right to make changes without further notice to any board.

You are responsible for determining whether the board will be suitable for your intended use or application or will achieve your intended results. Prior to using or distributing any systems that have been evaluated, designed or tested using the board, you agree to test and validate your design to confirm the functionality for your application. Any technical, applications or design information or advice, quality characterization, reliability data or other services provided by **onsemi** shall not constitute any representation or warranty by **onsemi**, and no additional obligations or liabilities shall arise from **onsemi** having provided such information or services.

onsemi products including the boards are not designed, intended, or authorized for use in life support systems, or any FDA Class 3 medical devices or medical devices with a similar or equivalent classification in a foreign jurisdiction, or any devices intended for implantation in the human body. You agree to indemnify, defend and hold harmless **onsemi**, its directors, officers, employees, representatives, agents, subsidiaries, affiliates, distributors, and assigns, against any and all liabilities, losses, costs, damages, judgments, and expenses, arising out of any claim, demand, investigation, lawsuit, regulatory action or cause of action arising out of or associated with any unauthorized use, even if such claim alleges that **onsemi** was negligent regarding the design or manufacture of any products and/or the board.

This evaluation board/kit does not fall within the scope of the European Union directives regarding electromagnetic compatibility, restricted substances (RoHS), recycling (WEEE), FCC, CE or UL, and may not meet the technical requirements of these or other related directives.

FCC WARNING − This evaluation board/kit is intended for use for engineering development, demonstration, or evaluation purposes only and is not considered by **onsemi** to be a finished end product fit for general consumer use. It may generate, use, or radiate radio frequency energy and has not been tested for compliance with the limits of computing devices pursuant to part 15 of FCC rules, which are designed to provide reasonable protection against radio frequency interference. Operation of this equipment may cause interference with radio communications, in which case the user shall be responsible, at its expense, to take whatever measures may be required to correct this interference.

onsemi does not convey any license under its patent rights nor the rights of others.

LIMITATIONS OF LIABILITY: **onsemi** shall not be liable for any special, consequential, incidental, indirect or punitive damages, including, but not limited to the costs of requalification, delay, loss of profits or goodwill, arising out of or in connection with the board, even if **onsemi** is advised of the possibility of such damages. In no event shall **onsemi**'s aggregate liability from any obligation arising out of or in connection with the board, under any theory of liability, exceed the purchase price paid for the board, if any.

The board is provided to you subject to the license and other terms per **onsemi**'s standard terms and conditions of sale. For more information and documentation, please visit www.onsemi.com.

ADDITIONAL INFORMATION

TECHNICAL PUBLICATIONS:
Technical Library: www.onsemi.com/design/resources/technical−documentation
onsemi Website: www.onsemi.com

ONLINE SUPPORT: www.onsemi.com/support
For additional information, please contact your local Sales Representative at www.onsemi.com/support/sales

Downloaded from Arrow.com.