IEQ05 series

XP Power

5W

DC-DC converters

The IEQ05 series is housed in a SIP8 plastic case. Featuring a 4:1 input voltage range of 4.5 to 18VDC, 9 to 36VDC or 18 to 75VDC with both single and dual outputs, singles have 3.3, 5, 12, 15 or 24VDC with duals having ±12 & ±15VDC.

The 5W IEQ05 provides 1.5kVDC isolation between input and output, the output has over load and short circuit protection, remote On/Off is standard. The operating temperature range is from -40°C to +90°C, with derating above +65°C.

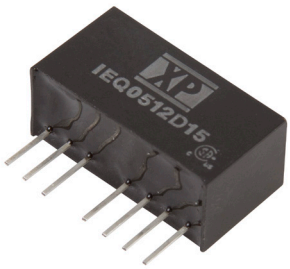

Features

- Regulated single & dual outputs
- 4:1 input range
- Single outputs 3.3 to 24VDC
- Dual outputs ±12 & ±15VDC
- SIP8 package
- 1.5kVDC isolation
- Remote On/Off
- -40°C to +90°C operating temperature
- Full power to +65°C
- 3 year warranty

Applications

Autonomous equipment

Industrial

Technology

Dimensions

21.8 x 9.3 x 11.2mm (0.86" x 0.37" x 0.44")

Documentation

For further information click the link or scan the code

→ xppower.com

Models & ratings

Model number	Input voltage	Output voltage	Output current	Efficiency	Input current[1,2]		Maximum capacitive load[3]
					No load	Full load	
IEQ0512S3V3	4.5-18VDC	3.3VDC	1075mA	76%	60mA	390mA	1000µF
IEQ0512S05		5.0VDC	1000mA	81%		515mA	1000µF
IEQ0512S12		12.0VDC	417mA	83%		500mA	220µF
IEQ0512S15		15.0VDC	334mA	83%		505mA	100µF
IEQ0512S24		24.0VDC	209mA	82%		510mA	100µF
IEQ0512D12		±12.0VDC	±209mA	81%		515mA	±100µF
IEQ0512D15		±15.0VDC	±167mA	82%		510mA	±47µF

Continued on page 2

Notes:

1. Input currents measured at nominal input voltage.
2. Input current is typically 2.5mA at nominal input voltage when output is remotely turned off.
3. Maximum capacitive load is per output.

Downloaded from Arrow.com.

Models & ratings

Model number	Input voltage	Output voltage	Output current	Efficiency	Input current[1,2]		Maximum capacitive load[3]
					No load	Full load	
IEQ0524S3V3	9-36VDC	3.3VDC	1075mA	76%	30 mA	195mA	1000µF
IEQ0524S05		5.0VDC	1000mA	81%		255mA	1000µF
IEQ0524S12		12.0VDC	417mA	83%		250mA	220µF
IEQ0524S15		15.0VDC	334mA	84%		250mA	100µF
IEQ0524S24		24.0VDC	209mA	83%		250mA	100µF
IEQ0524D12		±12.0VDC	±209mA	82%		255mA	±100µF
IEQ0524D15		±15.0VDC	±167mA	82%		255mA	±47µF
IEQ0548S3V3	18-75VDC	3.3VDC	1075mA	76%	20 mA	95mA	1000µF
IEQ0548S05		5.0VDC	1000mA	80%		130mA	1000µF
IEQ0548S12		12.0VDC	417mA	83%		125mA	220µF
IEQ0548S15		15.0VDC	334mA	84%		125mA	100µF
IEQ0548S24		24.0VDC	209mA	82%		125mA	100µF
IEQ0548D12		±12.0VDC	±209mA	82%		125mA	±100µF
IEQ0548D15		±15.0VDC	±167mA	83%		125mA	±47µF

Notes:

1. Input currents measured at nominal input voltage.
2. Input current is typically 2.5mA at nominal input voltage when output is remotely turned off.
3. Maximum capacitive load is per output.

Input

Characteristic	Minimum	Typical	Maximum	Units	Notes & conditions
Input voltage range	4.5		18	VDC	12VDC nominal
	9		36		24VDC nominal
	18		75		48VDC nominal
Input filter	Internal capacitor				
Input surge			36	VDC for 1s	12VDC models
			50		24VDC models
			100		48VDC models
Remote on/off	ON: open circuit OFF: 2-4 mA via 1kΩ resistor into pin 3 with respect to pin 1				

Output

Characteristic	Minimum	Typical	Maximum	Units	Notes & conditions
Output voltage	3.3		30	VDC	See models and ratings table
Initial set accuracy			±2	%	
Output voltage balance		±1	±2	%	For dual output with balanced laods
Minimum load				A	No minimum load required
Line regulation		±0.3	±0.5	%	
		±0.5	±1.0	%	
Cross regulation			±5.0	%	On dual output models when one load is varied between 25% and 100% and other is fixed at 100%
Transient response		3	5	% deviation	Recovery within 1% in less than 500µs for a 25% load change.
Ripple & noise			100	mV pk-pk	20MHz bandwidth. Measured using 0.47µF ceramic capacitor.
Overload protection		170		%	20MHz bandwidth, measured using 0.1µF ceramic capacitor
Short circuit protection	Continuous, with auto recovery				
Maximum capacitive load	See models and ratings table				
Temperature coefficient			0.02	%/°C	

Downloaded from Arrow.com.

General

Characteristic	Minimum	Typical	Maximum	Units	Notes & conditions
Efficiency		82		%	See models and ratings table
Isolation: input to output	1500/1800			VDC	60s/1s
Isolation Resistance	10^9			Ω	At 500VDC
Isolation Capacitance		250		pF	200Vrms
Switching Frequency	100			kHz	
Power Density			2.17 (35.7)	W/cm³ (W/in³)	
Mean Time Between Failure		2.4		MHrs	MIL-HDBK-217F, +25°C GB
Weight		4.8 (0.01)		g (lb)	

Environmental

Characteristic	Minimum	Typical	Maximum	Units	Notes & conditions
Operating temperature	-40		+90	°C	See derating curve.
Storage temperature	-55		+125	°C	
Case temperature			+90	°C	
Humidity			95	%RH	Non-condensing
Cooling	Natural convection				
Case flammability					Non conductive black plastic

Safety approvals

Safety agency	Standard	Notes & conditions
UL	UL/cUL60950-1, 62368-1	ITE
CE	Meets all applicable directives	
UKCA	Meets all applicable legislation	

Emissions - EMC

Phenomenon	Standard	Test level	Notes & conditions
Conducted	EN55022	Class A	See application notes

Immunity - EMC

Phenomenon	Standard	Test level	Criteria	Notes & conditions
ESD Immunity	EN61000-4-2	±6kV	A	Contact
		±8kV		Air
Radiated immunity	EN61000-4-3	10V/m	A	
EFT/Burst	EN61000-4-4	±2kV	A	With external capacitor, see application notes
Surge	EN61000-4-5	±1kV	A	With external capacitor, see application notes
Conducted immunity	EN61000-4-6	10Vrms	A	

Downloaded from Arrow.com.

Application notes

Derating curve

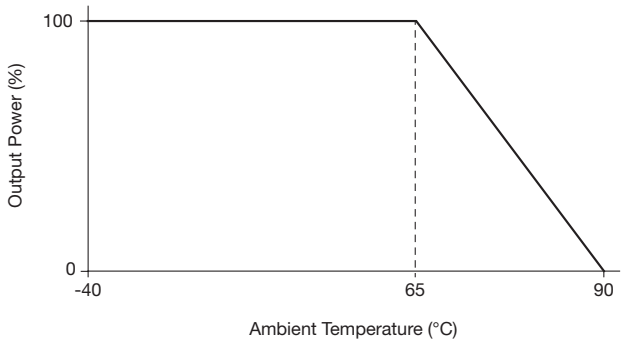

Model	C1	C2	C3	L1	C4	C5	C6	C7
IEQ0512		10µF/25V, 1206	10µF/25V, 1206	2.7µH, SCD0504T	10µF/25V, 1206	10µF/25V, 1206		220pF/2kV, 1808
IEQ0524	2.2µF/50V 1206	2.2µF/50V, 1206	2.2µF/50V, 1206	3.3µH, SCD0504T	2.2µF/50V, 1206	2.2µF/50V, 1206	2.2µF/50V, 1206	680pF/2kV, 1808
IEQ0548		1µF/100V, 1206	1µF/100V, 1206	39µH, SCD0504T	1µF/100V, 1206	1µF/100V, 1206		100pF/2kV, 1808

External Filter meets EMI EN55022, class A

Single output models

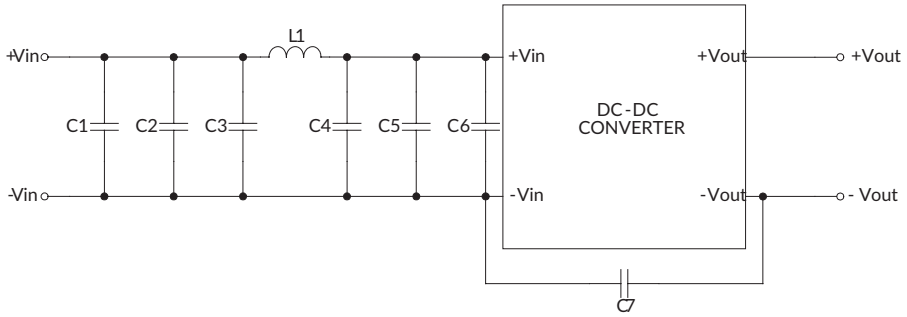

Dual output models

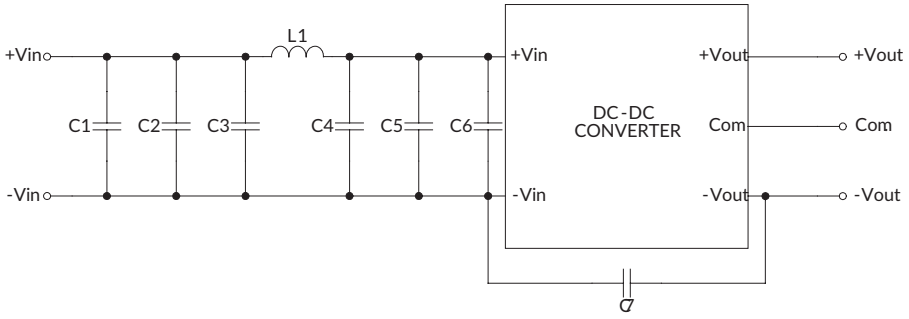

Downloaded from Arrow.com.

Application notes

EFT and surge

Single

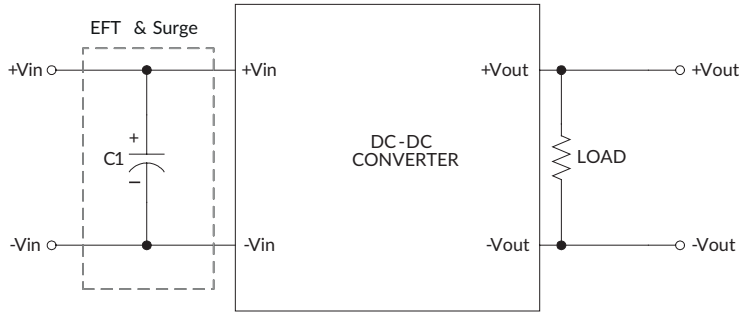

Dual

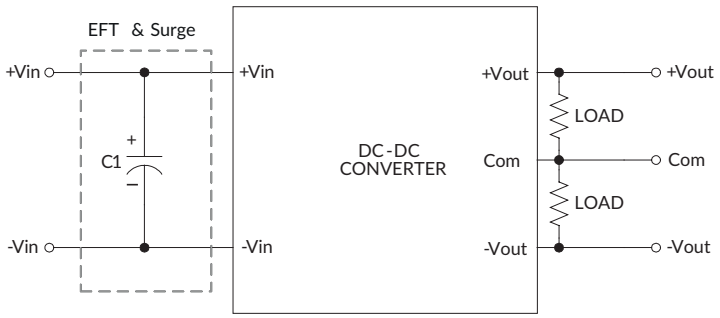

Mechanical details

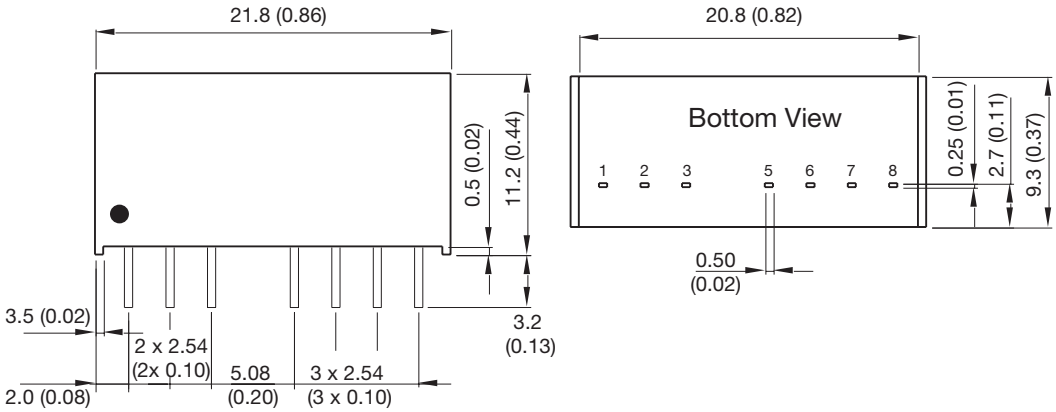

Pin connections		
Pin	**Single**	**Dual**
1	-Vin	-Vin
2	+Vin	+Vin
3	Remote On/Off	Remote On/Off
5	No Connection	No Connection
6	+Vout	+Vout
7	-Vout	Common
8	No Connection	-Vout

Notes:

1. All dimensions are in mm (inches)
2. Weight: 4.8 (0.01) g (lb) approx.
3.Tolerance: x.xx (x.x) = ±0.5 (±0.02). x.xxx (x.xx) = ±0.25 (±0.01)
4. Pin tolerance: ±0.05 (±0.002)

Downloaded from Arrow.com.