| REVISIONS | | | |
|---|---|---|---|
| LTR | DESCRIPTION | DATE (YR-MO-DA) | APPROVED |
| A | Add vendor CAGE F8859. Add device Class V criteria. Add delta limits, table III. Add case outline X. Update boilerplate to MIL-PRF-38535 requirements. – lgt | 01-02-26 | Raymond Monnin |
| B | Add radiation features in section 1.5. Correct the waveforms in figure 5. Update the boilerplate to include radiation hardness assured requirements. Editorial changes throughout. – jak | 04-12-14 | Thomas M. Hess |
| C | Update boilerplate paragraphs to the current MIL-PRF-38535 requirements. - LTG | 11-04-19 | David J. Corbett |
| D | Add vendor devices. Update boilerplate paragraphs to the current MIL-PRF-38535 requirements. - MAA | 16-03-23 | Thomas M. Hess |
| E | Add case outline Y for device type 01. Update boilerplate paragraphs to the current MIL-PRF-38535 requirements. - LTG | 19-01-29 | Thomas M. Hess |
| F | Update devices supplier CAGE 0C7V7 information to bulletin page. Update boilerplate paragraphs to the current MIL-PRF-38535 requirements. - TTM | 25-02-20 | Muhammad A. Akbar |

| | | | | | | | | | | | | | | | | | | | | |
|---|---|---|---|---|---|---|---|---|---|---|---|---|---|---|---|---|---|---|---|---|
| REV | | | | | | | | | | | | | | | | | | | | |
| SHEET | | | | | | | | | | | | | | | | | | | | |
| REV | F | F | F | F | F | F | | | | | | | | | | | | | | |
| SHEET | 15 | 16 | 17 | 18 | 19 | 20 | | | | | | | | | | | | | | |

| REV STATUS | REV | F | F | F | F | F | F | F | F | F | F | F | F | F |
|---|---|---|---|---|---|---|---|---|---|---|---|---|---|---|
| OF SHEETS | SHEET | 1 | 2 | 3 | 4 | 5 | 6 | 7 | 8 | 9 | 10 | 11 | 12 | 13 | 14 |

PMIC N/A

| | | |
|---|---|---|
| **STANDARD MICROCIRCUIT DRAWING**<br><br>THIS DRAWING IS AVAILABLE FOR USE BY ALL DEPARTMENTS AND AGENCIES OF THE DEPARTMENT OF DEFENSE | PREPARED BY<br>Marcia B. Kelleher<br><br>CHECKED BY<br>Ray Monnin | **DLA LAND AND MARITIME**<br>**COLUMBUS, OHIO 43218-3990**<br>**https://www.dla.mil/LandandMaritime** |
| | APPROVED BY<br>Michael A. Frye<br><br>DRAWING APPROVAL DATE<br>89-06-07 | MICROCIRCUIT, DIGITAL, ADVANCED CMOS, SYNCHRONOUS PRESETTABLE BINARY COUNTER, MONOLITHIC SILICON |

| | | | | |
|---|---|---|---|---|
| AMSC N/A | REVISION LEVEL<br>F | SIZE<br>A | CAGE CODE<br>**67268** | **5962-89561** |
| | | SHEET 1 OF 20 | | |


DISTRIBUTION STATEMENT A. Approved for public release. Distribution is unlimited.

Downloaded from Arrow.com.

1. SCOPE

1.1 Scope. This drawing documents two product assurance class levels consisting of high reliability (device class Q and M) and space application (device class V). A choice of case outlines and lead finishes are available and are reflected in the Part or Identifying Number (PIN). When available, a choice of Radiation Hardness Assurance (RHA) levels is reflected in the PIN.

1.2 PIN. The PIN is as shown in the following examples.

For device class M and Q:

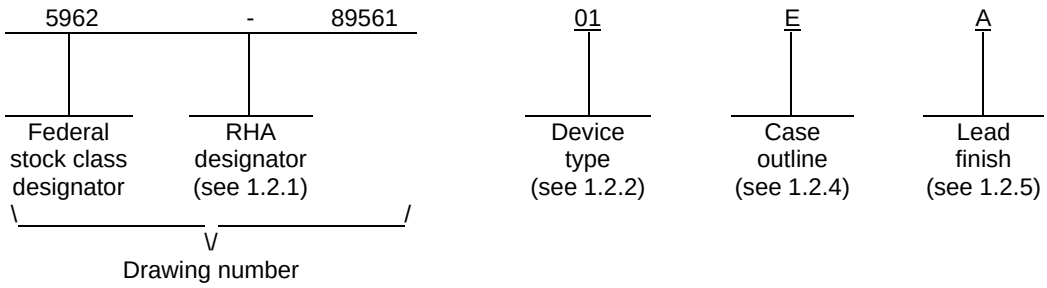


For device class V:

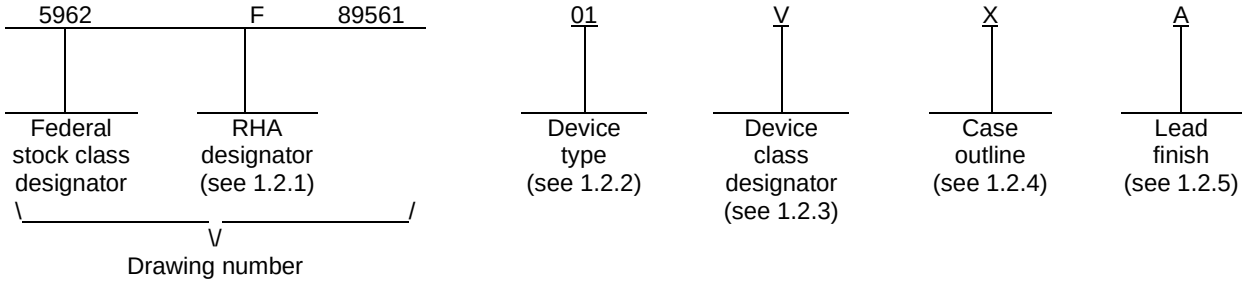


1.2.1 RHA designator. Device classes Q and V RHA marked devices meet the MIL-PRF-38535 specified RHA levels and are marked with the appropriate RHA designator. Device class M RHA marked devices meet the MIL-PRF-38535, appendix A specified RHA levels and are marked with the appropriate RHA designator. A dash (-) indicates a non-RHA device.

1.2.2 Device type(s). The device type(s) identify the circuit function as follows:

| Device type | Generic number | Circuit function |
|---|---|---|
| 01 | 54AC161 | Synchronous presettable binary counter |

1.2.3 Device class designator. The device class designator is a single letter identifying the product assurance level as listed below. Since the device class designator has been added after the original issuance of this drawing, device classes M and Q designators will not be included in the PIN and will not be marked on the device.

| Device class | Device requirements documentation |
|---|---|
| M | Vendor self-certification to the requirements for MIL-STD-883 compliant, non-JAN class level B microcircuits in accordance with MIL-PRF-38535, appendix A |
| Q or V | Certification and qualification to MIL-PRF-38535 |



Downloaded from Arrow.com.

1.2.4 Case outline(s). The case outline(s) are as designated in MIL-STD-1835 and as follows:

| Outline letter | Descriptive designator | Terminals | Package style |
|---|---|---|---|
| E | GDIP1-T16 or CDIP2-T16 | 16 | Dual-in-line |
| F | GDFP2-F16 or CDFP3-F16 | 16 | Flat pack |
| 2 | CQCC1-N20 | 20 | Square leadless chip carrier |
| X | CDFP4-F16 | 16 | Flat pack 7 |
| Y | CDFP4-F16 | 16 | Flat pack 8/ |

1.2.5 Lead finish. The lead finish is as specified in MIL-PRF-38535 for device classes Q and V or MIL-PRF-38535, appendix A for device class M.

1.3 Absolute maximum ratings. 1/ 2/ 3/

Supply voltage range ($V_{CC}$) ..... -0.5 V dc to +7.0 V dc
DC input voltage range ($V_{IN}$) ..... -0.5 V dc to $V_{CC}$ + 0.5 V dc
DC output voltage range ($V_{OUT}$) ..... -0.5 V dc to $V_{CC}$ + 0.5 V dc
Clamp diode current ($I_{IK}$, $I_{OK}$) ..... ±20 mA
DC output current ..... ±50 mA
DC $V_{CC}$ or GND current (per pin) ..... ±50 mA
Storage temperature range ($T_{STG}$) ..... -65°C to +150°C
Maximum power dissipation ($P_D$) ..... 500 mW
Lead temperature (soldering, 10 seconds):
Case outlines X and Y ..... +260°C
All other case outlines except cases X and Y ..... +245°C
Thermal resistance, junction-to-case ($\theta_{JC}$) ..... See MIL-STD-1835
Junction temperature ($T_J$) ..... +175°C 4/

1.4 Recommended operating conditions. 2/ 3/ 5/

Supply voltage range ($V_{CC}$) ..... +2.0 V dc to +6.0 V dc
Input voltage range ($V_{IN}$) ..... +0.0 V dc to $V_{CC}$
Output voltage range ($V_{OUT}$) ..... +0.0 V dc to $V_{CC}$
Case operating temperature range ($T_C$) ..... -55°C to +125°C
Input rise or fall times:
$V_{CC}$ = 3.6 V to 5.5 V ..... 0 to 8 ns/V
Minimum setup time, Pn to CP ($t_s$):
$T_C$ = +25°C, $V_{CC}$ = 3.0 V ..... 11.0 ns
$T_C$ = +25°C, $V_{CC}$ = 4.5 V ..... 7.5 ns
$T_C$ = -55°C to 125°C, $V_{CC}$ = 3.0 V ..... 16.0 ns
$T_C$ = -55°C to 125°C, $V_{CC}$ = 4.5 V ..... 10.5 ns
Minimum hold time, Pn to CP ($t_h$):
$T_C$ = +25°C, $V_{CC}$ = 3.0 V ..... 0.0 ns
$T_C$ = +25°C, $V_{CC}$ = 4.5 V ..... 1.5 ns
$T_C$ = -55°C to 125°C, $V_{CC}$ = 3.0 V ..... 0.5 ns
$T_C$ = -55°C to 125°C, $V_{CC}$ = 4.5 V ..... 1.5 ns
Minimum setup time, $\overline{PE}$ to CP ($t_s$):
$T_C$ = +25°C, $V_{CC}$ = 3.0 V ..... 11.5 ns
$T_C$ = +25°C, $V_{CC}$ = 4.5 V ..... 7.5 ns
$T_C$ = -55°C to 125°C, $V_{CC}$ = 3.0 V ..... 15.0 ns
$T_C$ = -55°C to 125°C, $V_{CC}$ = 4.5 V ..... 10.5 ns
Minimum hold time, $\overline{PE}$ to CP ($t_h$):
$T_C$ = +25°C, $V_{CC}$ = 3.0 V ..... -1.5 ns
$T_C$ = +25°C, $V_{CC}$ = 4.5 V ..... -0.5 ns
$T_C$ = -55°C to 125°C, $V_{CC}$ = 3.0 V ..... -1.0 ns
$T_C$ = -55°C to 125°C, $V_{CC}$ = 4.5 V ..... 0.0 ns



Downloaded from Arrow.com.

1.4 Recommended operating conditions – Continued.

Minimum setup time, CEP or CET to CP ($t_s$):
$T_C$ = +25°C, $V_{CC}$ = 3.0 V .....6.0 ns
$T_C$ = +25°C, $V_{CC}$ = 4.5 V .....4.5 ns
$T_C$ = -55°C to 125°C, $V_{CC}$ = 3.0 V .....7.5 ns
$T_C$ = -55°C to 125°C, $V_{CC}$ = 4.5 V .....5.5 ns
Minimum hold time, CEP or CET to CP ($t_h$):
$T_C$ = +25°C, $V_{CC}$ = 3.0 V .....1.0 ns
$T_C$ = +25°C, $V_{CC}$ = 4.5 V .....2.0 ns
$T_C$ = -55°C to 125°C, $V_{CC}$ = 3.0 V .....2.0 ns
$T_C$ = -55°C to 125°C, $V_{CC}$ = 4.5 V .....2.0 ns
Minimum pulse width, CP ($t_w$):
$T_C$ = +25°C, $V_{CC}$ = 3.0 V .....5.0 ns
$T_C$ = +25°C, $V_{CC}$ = 4.5 V .....5.0 ns
$T_C$ = -55°C to 125°C, $V_{CC}$ = 3.0 V .....5.0 ns
$T_C$ = -55°C to 125°C, $V_{CC}$ = 4.5 V .....5.0 ns
Minimum pulse width, $\overline{MR}$ ($t_w$):
$T_C$ = +25°C, $V_{CC}$ = 3.0 V .....5.0 ns
$T_C$ = +25°C, $V_{CC}$ = 4.5 V .....5.0 ns
$T_C$ = -55°C to 125°C, $V_{CC}$ = 3.0 V .....5.0 ns
$T_C$ = -55°C to 125°C, $V_{CC}$ = 4.5 V .....5.0 ns
Minimum recovery time, $\overline{MR}$ to CP($t_{rec}$):
$T_C$ = +25°C, $V_{CC}$ = 3.0 V .....1.5 ns
$T_C$ = +25°C, $V_{CC}$ = 4.5 V .....1.5 ns
$T_C$ = -55°C to 125°C, $V_{CC}$ = 3.0 V .....1.5 ns
$T_C$ = -55°C to 125°C, $V_{CC}$ = 4.5 V .....2.0 ns
Maximum frequency, CP ($f_{max}$):
$T_C$ = +25°C, $V_{CC}$ = 3.0 V .....70 MHz
$T_C$ = +25°C, $V_{CC}$ = 4.5 V .....95 MHz
$T_C$ = -55°C to 125°C, $V_{CC}$ = 3.0 V .....55 MHz
$T_C$ = -55°C to 125°C, $V_{CC}$ = 4.5 V .....80 MHz

1.5 Radiation features.

For device type 01 (Vendor cage code: F8859):
Maximum total dose available (dose rate = 50 – 300 rad(Si)/s) ..... 300 krad(Si)
Single event phenomenon (SEP):
No single event latch-up (SEL) occurs at effective LET (see 4.4.4.2) ..... ≤ 93 MeV-cm$^2$/mg 6/

1/ Stresses above the absolute maximum rating may cause permanent damage to the device. Extended operation at the maximum levels may degrade performance and affect reliability.
2/ Unless otherwise noted, all voltages are referenced to GND.
3/ The limits for the parameters specified herein shall apply over the full specified $V_{CC}$ range and case temperature range of -55°C to +125°C.
4/ Maximum junction temperature shall not be exceeded except for allowable short duration burn-in screening conditions in accordance with method 5004 of MIL-STD-883.
5/ Operation from 2.0 V dc to 3.0 V dc is provided for compatibility with data retention and battery back-up systems. Data retention implies no input transition and no stored data loss with the following conditions: $V_{IH} \geq 70\%\ V_{CC}$, $V_{IL} \leq 30\%\ V_{CC}$, $V_{OH} \geq 70\%\ V_{CC}$ @ -20µA, $V_{OL} \leq 30\%\ V_{CC}$ @ 20 µA.
6/ Limits obtained during technology characterization/qualification, guaranteed by design or process, but not production tested unless specified by the customer through the purchase order or contract.
7/ Package case outline X flat pack with isolated lid.
8/ Package case outline Y flat pack with grounded lid.



Downloaded from Arrow.com.

2. APPLICABLE DOCUMENTS

2.1 Government specification, standards, and handbooks. The following specification, standards, and handbooks form a part of this drawing to the extent specified herein. Unless otherwise specified, the issues of these documents are those cited in the solicitation or contract.

DEPARTMENT OF DEFENSE SPECIFICATION

MIL-PRF-38535 - Integrated Circuits, Manufacturing, General Specification for.

DEPARTMENT OF DEFENSE STANDARDS

MIL-STD-883 - Test Method Standard Microcircuits.
MIL-STD-1835 - Interface Standard Electronic Component Case Outlines.

DEPARTMENT OF DEFENSE HANDBOOKS

MIL-HDBK-103 - List of Standard Microcircuit Drawings.
MIL-HDBK-780 - Standard Microcircuit Drawings.

(Copies of these documents are available online at https://quicksearch.dla.mil.)

2.2 Non-Government publications. The following document(s) form a part of this document to the extent specified herein. Unless otherwise specified, the issues of these documents cited in the solicitation or contract.

JEDEC – SOLID STATE TECHNOLOGY ASSOCIATION (JEDEC)

JESD20 - Standard for Description of 54/74ACXXXXX and 54/74ACTXXXXX Advanced High-Speed CMOS Devices.

JESD78 - IC Latch-Up Test.

(Copies of these documents are available online at https://www.jedec.org/.)

ASTM INTERNATIONAL (ASTM)

ASTM F1192 - Standard Guide for the Measurement of Single Event Phenomena (SEP) Induced by Heavy Ion Irradiation of Semiconductor Devices.

(Copies of these documents are available online at https://www.astm.org/.)

2.3 Order of precedence. In the event of a conflict between the text of this drawing and the references cited herein, the text of this drawing takes precedence. Nothing in this document, however, supersedes applicable laws and regulations unless a specific exemption has been obtained.

3. REQUIREMENTS

3.1 Item requirements. The individual item requirements for device classes Q and V shall be in accordance with MIL-PRF-38535 as specified herein, or as modified in the device manufacturer's Quality Management (QM) plan. The modification in the QM plan shall not affect the form, fit, or function as described herein. The individual item requirements for device class M shall be in accordance with MIL-PRF-38535, appendix A for non-JAN class level B devices and as specified herein.

3.2 Design, construction, and physical dimensions. The design, construction, and physical dimensions shall be as specified in MIL-PRF-38535 and herein for device classes Q and V or MIL-PRF-38535, appendix A and herein for device class M.



Downloaded from Arrow.com.

3.2.1 Case outlines. The case outlines shall be in accordance with 1.2.4 herein.

3.2.2 Terminal connections. The terminal connections shall be as specified on figure 1.

3.2.3 Truth table. The truth table shall be as specified on figure 2.

3.2.4 Logic diagram. The logic diagram shall be as specified on figure 3.

3.2.5 Counting sequence. The counting sequence shall be as specified on figure 4.

3.2.6 Switching waveforms and test circuit. The switching waveforms and test circuit shall be as specified on figure 5.

3.2.7 Radiation exposure circuit. The radiation exposure circuit shall be maintained by the manufacturer under document revision level control and shall be made available to the preparing and acquiring activity upon request.

3.3 Electrical performance characteristics and postirradiation parameter limits. Unless otherwise specified herein, the electrical performance characteristics and postirradiation parameter limits are as specified in table IA and shall apply over the full case operating temperature range.

3.4 Electrical test requirements. The electrical test requirements shall be the subgroups specified in table IIA. The electrical tests for each subgroup are defined in table IA.

3.5 Marking. The part shall be marked with the PIN listed in 1.2 herein. In addition, the manufacturer's PIN may also be marked. For packages where marking of the entire SMD PIN number is not feasible due to space limitations, the manufacturer has the option of not marking the "5962-" on the device. For RHA product using this option, the RHA designator shall still be marked. Marking for device classes Q and V shall be in accordance with MIL-PRF-38535. Marking for device class M shall be in accordance with MIL-PRF-38535, appendix A.

3.5.1 Certification/compliance mark. The certification mark for device classes Q and V shall be a "QML" or "Q" as required in MIL-PRF-38535. The compliance mark for device class M shall be a "C" as required in MIL-PRF-38535, appendix A.

3.6 Certificate of compliance. For device classes Q and V, a certificate of compliance shall be required from a QML-38535 listed manufacturer in order to supply to the requirements of this drawing (see 6.6.1 herein). For device class M, a certificate of compliance shall be required from a manufacturer in order to be listed as an approved source of supply in MIL-HDBK-103 (see 6.6.2 herein). The certificate of compliance submitted to DLA Land and Maritime-VA prior to listing as an approved source of supply for this drawing shall affirm that the manufacturer's product meets, for device classes Q and V, the requirements of MIL-PRF-38535 and herein or for device class M, the requirements of MIL-PRF-38535, appendix A and herein.

3.7 Certificate of conformance. A certificate of conformance as required for device classes Q and V in MIL-PRF-38535 or for device class M in MIL-PRF-38535, appendix A shall be provided with each lot of microcircuits delivered to this drawing.

3.8 Notification of change for device class M. For device class M, notification to DLA Land and Maritime-VA of change of product (see 6.2 herein) involving devices acquired to this drawing is required for any change that affects this drawing.

3.9 Verification and review for device class M. For device class M, DLA Land and Maritime, DLA Land and Maritime 's agent, and the acquiring activity retain the option to review the manufacturer's facility and applicable required documentation. Offshore documentation shall be made available onshore at the option of the reviewer.

3.10 Microcircuit group assignment for device class M. Device class M devices covered by this drawing shall be in microcircuit group number 40 (see MIL-PRF-38535, appendix A).



Downloaded from Arrow.com.

TABLE IA. Electrical performance characteristics.

| Test and MIL-STD-883 test method 1/ | Symbol | Test conditions 2/ 3/ -55°C ≤ $T_C$ ≤ +125°C +3.0 V ≤ $V_{CC}$ ≤ +5.5 V unless otherwise specified | Device type and 4/ device class | $V_{CC}$ | Group A subgroups | Limits 5/ | | Unit |
|---|---|---|---|---|---|---|---|---|
| | | | | | | Min | Max | |
| Positive input clamp voltage 3022 | $V_{IC+}$ | For input under test, $I_{IN}$ = 1.0 mA | All V | 0.0 V | 1 | 0.4 | 1.5 | V |
| Negative input clamp voltage 3022 | $V_{IC-}$ | For input under test, $I_{IN}$ = -1.0 mA | All V | Open | 1 | -0.4 | -1.5 | V |
| High level output voltage 3006 | $V_{OH}$ 6/ | $V_{IN}$ = $V_{IH}$ minimum or $V_{IL}$ maximum $I_{OH}$ = -50 μA | All All | 3.0 V | 1, 2, 3 | 2.9 | | V |
| | | | All All | 4.5 V | | 4.4 | | |
| | | | All All | 5.5 V | | 5.4 | | |
| | | $V_{IN}$ = $V_{IH}$ minimum or $V_{IL}$ maximum $I_{OH}$ = -4 mA | All All | 3.0 V | | 2.4 | | |
| | | $V_{IN}$ = $V_{IH}$ minimum or $V_{IL}$ maximum $I_{OH}$ = -24 mA | All All | 4.5 V | | 3.7 | | |
| | | | All All | 5.5 V | | 4.7 | | |
| | | $V_{IN}$ = $V_{IH}$ minimum or $V_{IL}$ maximum $I_{OH}$ = -50 mA | All All | 5.5 V | | 3.85 | | |
| Low level output voltage 3007 | $V_{OL}$ 6/ | $V_{IN}$ = $V_{IH}$ minimum or $V_{IL}$ maximum $I_{OL}$ = +50 μA | All All | 3.0 V | 1, 2, 3 | | 0.1 | V |
| | | | All All | 4.5 V | | | 0.1 | |
| | | | All All | 5.5 V | | | 0.1 | |
| | | $V_{IN}$ = $V_{IH}$ minimum or $V_{IL}$ maximum $I_{OL}$ = +12 mA | All All | 3.0 V | | | 0.5 | |
| | | $V_{IN}$ = $V_{IH}$ minimum or $V_{IL}$ maximum $I_{OL}$ = 24 mA | All All | 4.5 V | | | 0.5 | |
| | | | All All | 5.5 V | | | 0.5 | |
| | | $V_{IN}$ = $V_{IH}$ minimum or $V_{IL}$ maximum $I_{OL}$ = +50 mA | All All | 5.5 V | | | 1.65 | |
| High level input voltage | $V_{IH}$ 7/ | | All All | 3.0 V | 1, 2, 3 | 2.1 | | V |
| | | | All All | 4.5 V | | 3.15 | | |
| | | | All All | 5.5 V | | 3.85 | | |
| Low level input voltage | $V_{IL}$ 7/ | | All All | 3.0 V | 1, 2, 3 | | 0.9 | V |
| | | | All All | 4.5 V | | | 1.35 | |
| | | | All All | 5.5 V | | | 1.65 | |

See footnotes at end of table.



Downloaded from Arrow.com.

TABLE IA. Electrical performance characteristics – Continued.

| Test and MIL-STD-883 test method 1/ | Symbol | Test conditions 2/ 3/ -55°C ≤ $T_C$ ≤ +125°C +3.0 V ≤ $V_{CC}$ ≤ +5.5 V unless otherwise specified | Device type and 4/ device class | $V_{CC}$ | Group A subgroups | Limits 5/ Min | Limits 5/ Max | Unit |
|---|---|---|---|---|---|---|---|---|
| Input leakage current low 3009 | $I_{IL}$ | $V_{IN}$ = 0.0 V | All | 5.5 V | 1 | | -0.1 | µA |
| | | | All | | 2, 3 | | -1.0 | |
| Input leakage current high 3010 | $I_{IH}$ | $V_{IN}$ = 5.5 V | All | 5.5 V | 1 | | 0.1 | µA |
| | | | All | | 2, 3 | | 1.0 | |
| Quiescent supply current, output high 3005 | $I_{CCH}$ | $V_{IN}$ = $V_{CC}$ or GND $I_O$ = 0 A | All | 5.5 V | 1 | | 4 | µA |
| | | | All | | 2, 3 | | 80 | |
| | | M, D, P, L, R, F 8/ | 01 | | 1 | | 50 | |
| Quiescent supply current, output low 3005 | $I_{CCL}$ | $V_{IN}$ = $V_{CC}$ or GND $I_O$ = 0 A | All | 5.5 V | 1 | | 4 | µA |
| | | | All | | 2,3 | | 80 | |
| | | M, D, P, L, R, F 8/ | 01 | | 1 | | 50 | |
| Input capacitance 3012 | $C_{IN}$ | See 4.4.1c $T_C$ = +25°C | All | 5.0 V | 4 | | 8.0 | pF |
| | | | All | | | | | |
| Power dissipation capacitance | $C_{PD}$ 9/ | See 4.4.1c $T_C$ = +25°C, f = 1 MHz | All | 5.0 V | 4 | | 60.0 | pF |
| | | | All | | | | | |
| Functional tests 3014 | 10/ | See 4.4.1b $V_{IN}$ = $V_{IH}$ or $V_{IL}$ Verify output $V_{OUT}$ | All | 3.0 V | 7, 8 | L | H | |
| | | | All | 5.5 V | 7, 8 | L | H | |
| Propagation delay time, high to low low to high, CP to Qn ($\overline{PE}$ = HIGH) 3003 | $t_{PHL1}$, $t_{PLH1}$ 11/ | $T_C$ = +25°C $C_L$ = 50 pF minimum $R_L$ = 500Ω See figure 5 | All | 3.0 V | 9 | 1.0 | 12.0 | ns |
| | | | All | | | | | |
| | | | All | 4.5 V | | 1.5 | 8.5 | |
| | | | All | | | | | |
| | | $T_C$ = -55°C and +125°C $C_L$ = 50 pF minimum $R_L$ = 500Ω See figure 5 | All | 3.0 V | 10, 11 | 1.0 | 14.0 | |
| | | | All | | | | | |
| | | | All | 4.5 V | | 1.5 | 10.0 | |
| | | | All | | | | | |
| Propagation delay time, high to low low to high, CP to Qn ($\overline{PE}$ = LOW) 3003 | $t_{PHL2}$, $t_{PLH2}$ 11/ | $T_C$ = +25°C $C_L$ = 50 pF minimum $R_L$ = 500Ω See figure 5 | All | 3.0 V | 9 | 1.0 | 12.0 | ns |
| | | | All | | | | | |
| | | | All | 4.5 V | | 1.5 | 8.5 | |
| | | | All | | | | | |
| | | $T_C$ = -55°C and +125°C $C_L$ = 50 pF minimum $R_L$ = 500Ω See figure 5 | All | 3.0 V | 10, 11 | 1.0 | 14.0 | |
| | | | All | | | | | |
| | | | All | 4.5 V | | 1.5 | 10.0 | |
| | | | All | | | | | |
| Propagation delay time, high to low low to high, CP to TC 3003 | $t_{PHL3}$ 11/ | $T_C$ = +25°C $C_L$ = 50 pF minimum $R_L$ = 500Ω See figure 5 | All | 3.0 V | 9 | 3.0 | 14.0 | ns |
| | | | All | | | | | |
| | | | All | 4.5 V | | 3.0 | 10.5 | |
| | | | All | | | | | |
| | $t_{PLH3}$ 11/ | | All | 3.0 V | | 3.0 | 14.0 | |
| | | | All | | | | | |
| | | | All | 4.5 V | | 3.0 | 10.0 | |
| | | | All | | | | | |

See footnotes at end of table.



Downloaded from Arrow.com.

TABLE IA. Electrical performance characteristics - Continued.

| Test and MIL-STD-883 test method 1/ | Symbol | Test conditions 2/ 3/ -55°C ≤ $T_C$ ≤ +125°C +3.0 V ≤ $V_{CC}$ ≤ +5.5 V unless otherwise specified | Device type and 4/ device class | $V_{CC}$ | Group A subgroups | Limits 5/ Min | Limits 5/ Max | Unit |
|---|---|---|---|---|---|---|---|---|
| Propagation delay time, high to low low to high, CP to TC 3003 | $t_{PHL3}$ 11/ | $T_C$ = -55°C and +125°C $C_L$ = 50 pF minimum $R_L$ = 500Ω See figure 5 | All | 3.0 V | 10, 11 | 3.0 | 17.5 | ns |
| | | | All | 4.5 V | | 3.0 | 13.0 | |
| | $t_{PLH3}$ 11/ | | All | 3.0 V | | 3.0 | 18.0 | |
| | | | All | 4.5 V | | 3.0 | 13.0 | |
| Propagation delay time, high to low low to high, CET to TC 3003 | $t_{PHL4}$ 11/ | $T_C$ = +25°C $C_L$ = 50 pF minimum $R_L$ = 500Ω See figure 5 | All | 3.0 V | 9 | 1.0 | 11.5 | ns |
| | | | All | 4.5 V | | 1.5 | 8.5 | |
| | $t_{PLH4}$ 11/ | | All | 3.0 V | | 1.0 | 10.0 | |
| | | | All | 4.5 V | | 1.5 | 6.5 | |
| | $t_{PHL4}$ 11/ | $T_C$ = -55°C and +125°C $C_L$ = 50 pF minimum $R_L$ = 500Ω See figure 5 | All | 3.0 V | 10, 11 | 1.0 | 13.5 | ns |
| | | | All | 4.5 V | | 1.5 | 10.5 | |
| | $t_{PLH4}$ 11/ | | All | 3.0 V | | 1.0 | 13.0 | |
| | | | All | 4.5 V | | 1.5 | 8.5 | |
| Propagation delay time, high to low $\overline{MR}$ to Qn 3003 | $t_{PHL5}$ 11/ | $T_C$ = +25°C $C_L$ = 50 pF minimum $R_L$ = 500Ω See figure 5 | All | 3.0 V | 9 | 1.0 | 11.5 | ns |
| | | | All | 4.5 V | | 1.5 | 8.5 | |
| | | $T_C$ = -55°C and +125°C $C_L$ = 50 pF minimum $R_L$ = 500Ω See figure 5 | All | 3.0 V | 10, 11 | 1.0 | 14.5 | ns |
| | | | All | 4.5 V | | 1.5 | 10.5 | |
| Propagation delay time, high to low, $\overline{MR}$ to TC 3003 | $t_{PHL6}$ 11/ | $T_C$ = +25°C $C_L$ = 50 pF minimum $R_L$ = 500Ω See figure 5 | All | 3.0 V | 9 | 1.0 | 15.0 | ns |
| | | | All | 4.5 V | | 1.5 | 11.5 | |
| | | $T_C$ = -55°C and +125°C $C_L$ = 50 pF minimum $R_L$ = 500Ω See figure 5 | All | 3.0 V | 10, 11 | 1.0 | 18.5 | ns |
| | | | All | 4.5 V | | 1.5 | 14.0 | |

See footnotes on next sheet.



Downloaded from Arrow.com.

TABLE IA. Electrical performance characteristics - Continued.

1/ For tests not listed in the referenced MIL-STD-883 (e.g. $V_{IH}$,$V_{IL}$) utilize the general test procedure under the conditions listed herein. All inputs and outputs shall be tested, as applicable, to the tests in table IA herein.

2/ Each input/output, as applicable shall be tested at the specified temperature for the specified limits. Output terminals not designated shall be high level logic, low level logic, or open, except as follows:

a. $V_{IC}$ (pos) tests, the GND terminal can be open. $T_C$ = +25°C.

b. $V_{IC}$ (neg) tests, the $V_{CC}$ terminal shall be open. $T_C$ = +25°C.

c. All $I_{CC}$ tests, the output terminal shall be open. When performing these tests, the current meter shall be placed in the circuit such that all current flows through the meter.

3/ RHA parts for device type 01 have been characterized through all levels M, D, P, L, R, and F of irradiation. However, this device is only tested at the 'F' level. Pre and post irradiation values are identical unless otherwise specified in table IA. When performing post irradiation electrical measurements for any RHA level for any device, $T_A$ = +25°C.

4/ The word "All" in the device type and device class column, means limits for all device types and classes.

5/ For negative and positive voltage and current values, the sign designates the potential difference in reference to GND and the direction of current flow, respectively; and the absolute value of the magnitude, not the sign, is relative to the minimum and maximum limits, as applicable, listed herein. All devices shall meet or exceed the limits specified in table IA, as applicable, at 3.0 V ≤ $V_{CC}$ ≤ 3.6 V and 4.5 V ≤ $V_{CC}$ ≤ 5.5 V.

6/ The $V_{OH}$ and $V_{OL}$ tests shall be tested at $V_{CC}$ = 3.0 V and 4.5 V. The $V_{OH}$ and $V_{OL}$ tests are guaranteed, if not tested, for other values of $V_{CC}$. Limits shown apply to operation at $V_{CC}$ = 3.3 V ±0.3 V and $V_{CC}$ = 5.0 V ±0.5 V. Tests with input current at +50 mA or -50 mA are performed on only one input at a time with duration not to exceed 10 ms. Transmission driving tests may be performed using $V_{IN}$ = $V_{CC}$ or GND. When $V_{IN}$ = $V_{CC}$ or GND is used, the test is guaranteed for $V_{IN}$ = $V_{IH}$ minimum and $V_{IL}$ maximum.

7/ The $V_{IH}$ and $V_{IL}$ tests are not required if applied as forcing functions for $V_{OH}$ and $V_{OL}$ tests.

8/ The maximum limit for this parameter at 100 krads (Si) is 4 μA.

9/ Power dissipation capacitance ($C_{PD}$) determines both the power consumption ($P_D$) and dynamic current consumption ($I_S$). Where:

$P_D = (C_{PD} + C_L)(V_{CC} \times V_{CC})f + (I_{CC} \times V_{CC})$

$I_S = (C_{PD} + C_L) V_{CC}f + I_{CC}$

f is the frequency of the input signal and $C_L$ is the external output load capacitance.

10/ Tests shall be performed in sequence, attributes data only. Functional tests shall include the truth table and other logic patterns used for fault detection. The test vectors used to verify the truth table shall, at a minimum, test all functions of each input and output. All possible input to output logic patterns per function shall be guaranteed, if not tested, to the truth table in figure 2 herein. Functional tests shall be performed in sequence as approved by the qualifying activity on qualified devices. Allowable tolerances in accordance with MIL-STD-883 for the input voltage levels may be incorporated. For $V_{OUT}$ measurements, L ≤ 0.3$V_{CC}$ and H ≥ 0.7$V_{CC}$.

11/ AC limits at $V_{CC}$ = 5.5 V are equal to the limits at $V_{CC}$ = 4.5 V and guaranteed by testing at $V_{CC}$ = 4.5 V. AC limits at $V_{CC}$ = 3.6 V are equal to limits at $V_{CC}$ = 3.0 V and guaranteed by testing at $V_{CC}$ = 3.0 V. Minimum ac limits for $V_{CC}$ = 5.5 V are 1.0 ns and guaranteed by guardbanding the $V_{CC}$ = 4.5 V minimum limits to 1.5 ns. For propagation delay tests, all paths must be tested.



Downloaded from Arrow.com.

TABLE IB. SEP test limits. 1/ 2/ 3/

| Device Type (Vendor cage code: F8859) | Bias $V_{CC}$ = 5.5 V No SEL occurs at effective LET |
|---|---|
| 01 | LET ≤ 93 MeV/(mg/cm$^2$) |

1/ For SEP test conditions, see 4.4.4.2 herein.
2/ Technology characterization and model verification supplemented by in-line data may be used in lieu of end of-line testing. Test plan must be approved by TRB and qualifying activity.
3/ Tested at worst case temperature, $T_A$ = +125°C ±10°C for latch-up.

| Device type | 01 | |
|---|---|---|
| Case outlines | E, F, X, and Y | 2 |
| Terminal number | Terminal symbol | |
| 1 | $\overline{MR}$ | NC |
| 2 | CP | $\overline{MR}$ |
| 3 | P0 | CP |
| 4 | P1 | P0 |
| 5 | P2 | P1 |
| 6 | P3 | NC |
| 7 | CEP | P2 |
| 8 | GND | P3 |
| 9 | $\overline{PE}$ | CEP |
| 10 | CET | GND |
| 11 | Q3 | NC |
| 12 | Q2 | $\overline{PE}$ |
| 13 | Q1 | CET |
| 14 | Q0 | Q3 |
| 15 | TC | Q2 |
| 16 | $V_{CC}$ | NC |
| 17 | - - - - | Q1 |
| 18 | - - - - | Q0 |
| 19 | - - - - | TC |
| 20 | - - - - | $V_{CC}$ |

NC = No internal connection

FIGURE 1. Terminal connections.



Downloaded from Arrow.com.

| Inputs | | | | Action on rising clock edge |
|---|---|---|---|---|
| $\overline{MR}$ | $\overline{PE}$ | CET | CEP | |
| L | X | X | X | Reset (clear) |
| H | L | X | X | Load (Pn to Qn) |
| H | H | H | H | Count (increment) |
| H | H | L | X | No change (hold) |
| H | H | X | L | No change (hold) |

H = High voltage level
L = Low voltage level
X = Irrelevant

FIGURE 2. Truth table.

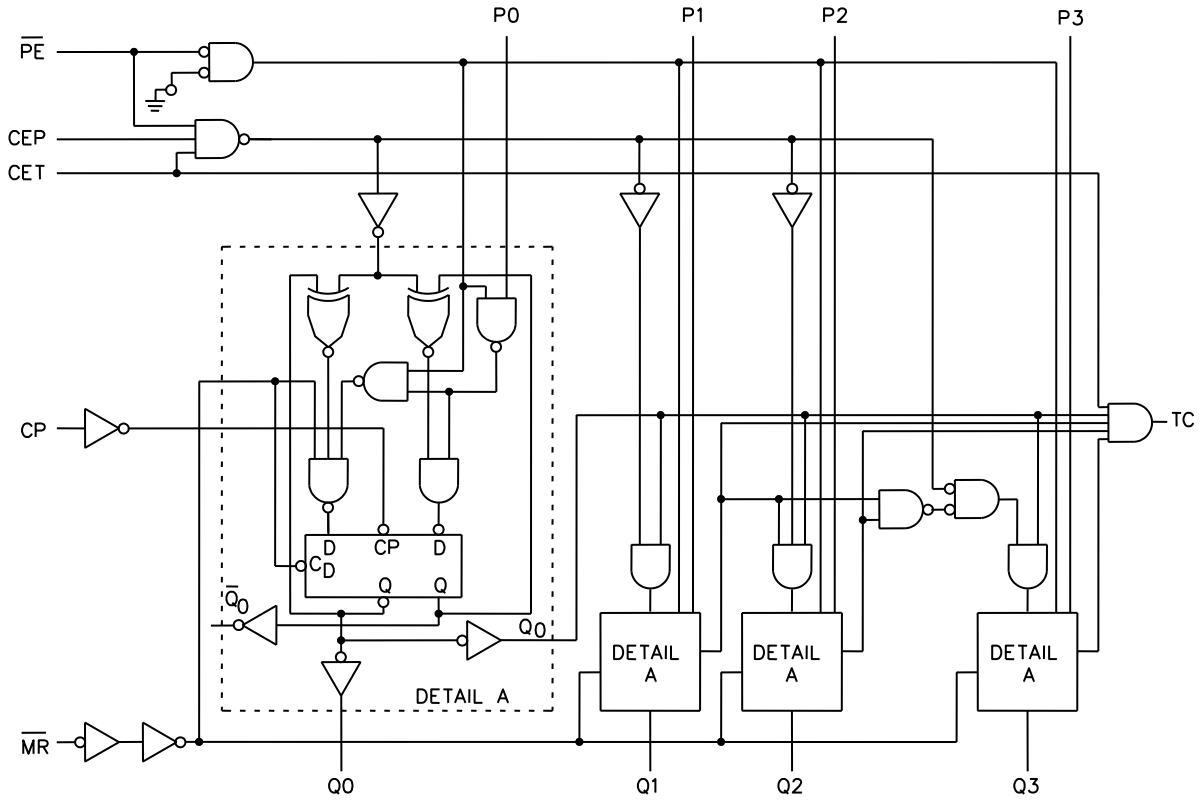


FIGURE 3. Logic diagram.



Downloaded from Arrow.com.

Sequence illustrated in waveforms:

1. Reset outputs to zero.
2. Preset to binary twelve.
3. Count to thirteen, fourteen, fifteen, zero, one, and two.
4. Inhibit.

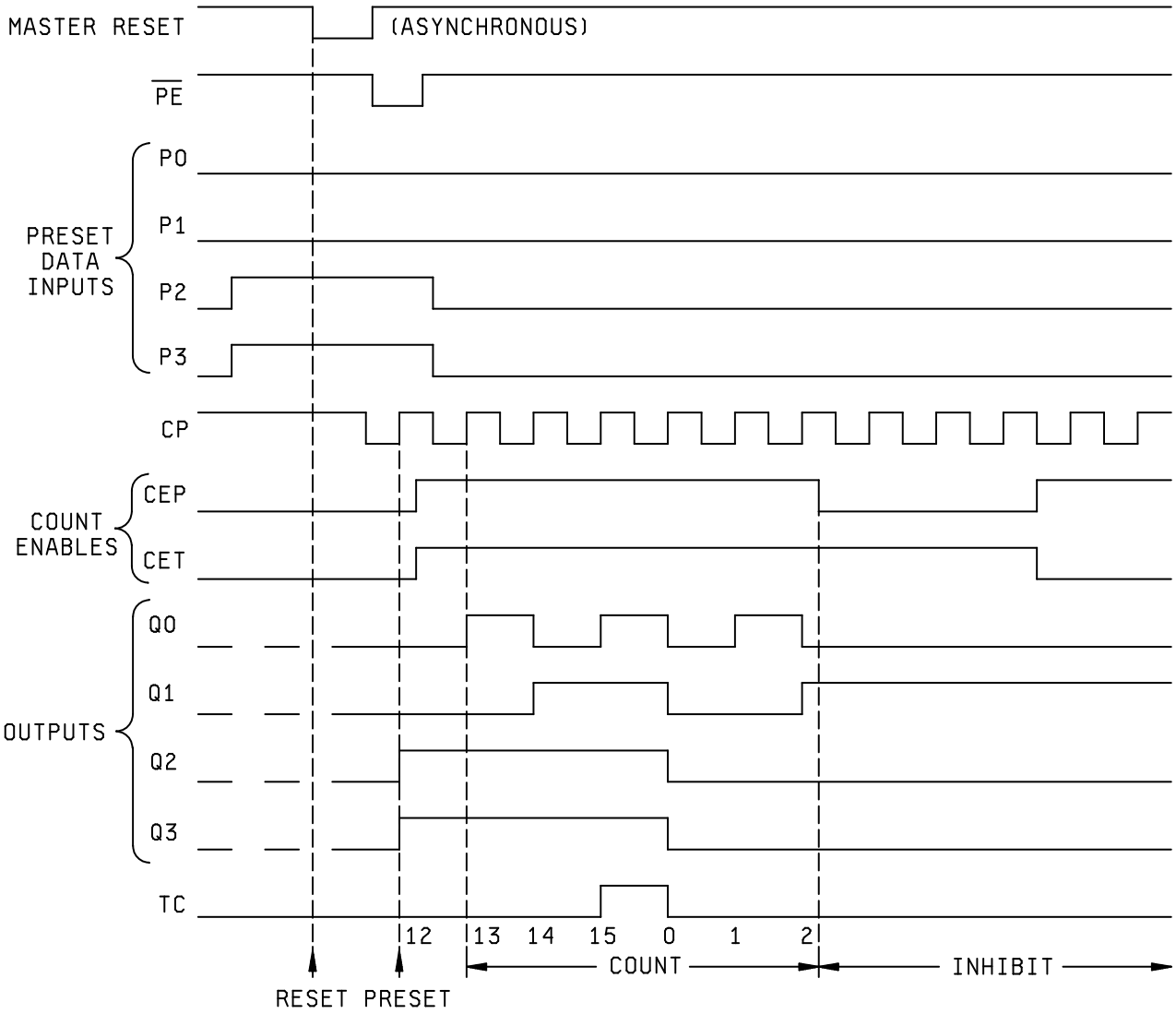


FIGURE 4. Counting sequence.



Downloaded from Arrow.com.

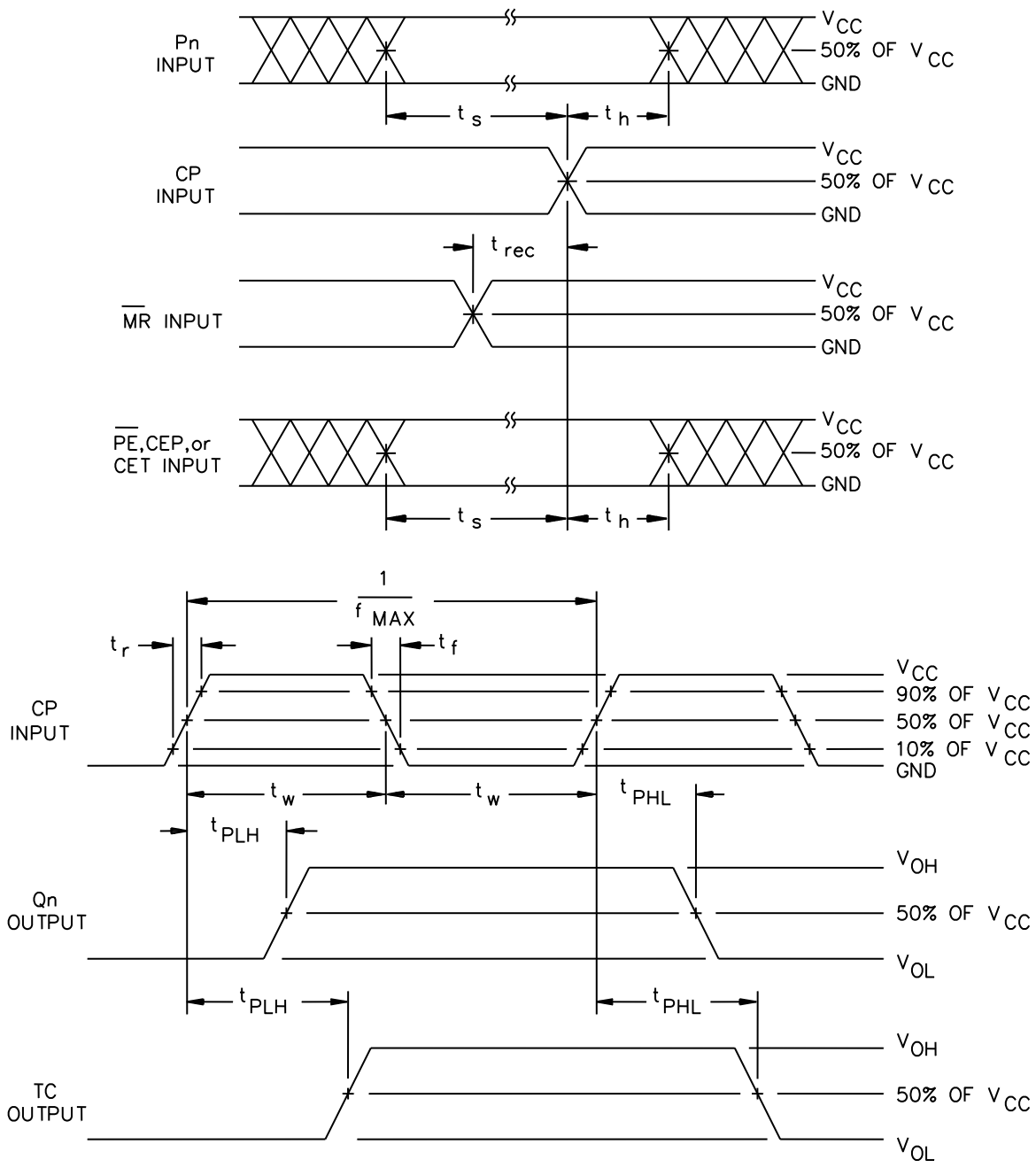


FIGURE 5. Switching waveforms and test circuit.



Downloaded from Arrow.com.

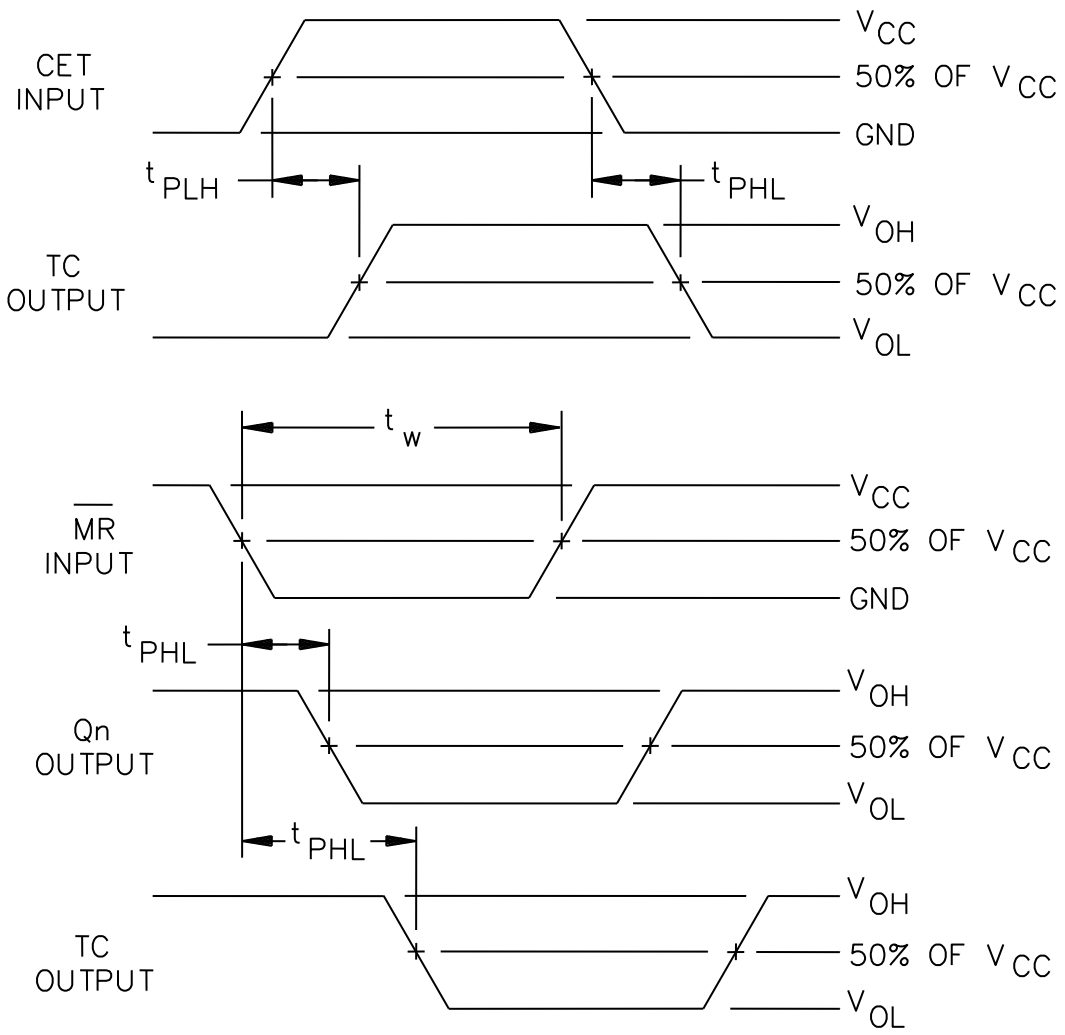


FIGURE 5. Switching waveforms and test circuit - Continued.



Downloaded from Arrow.com.

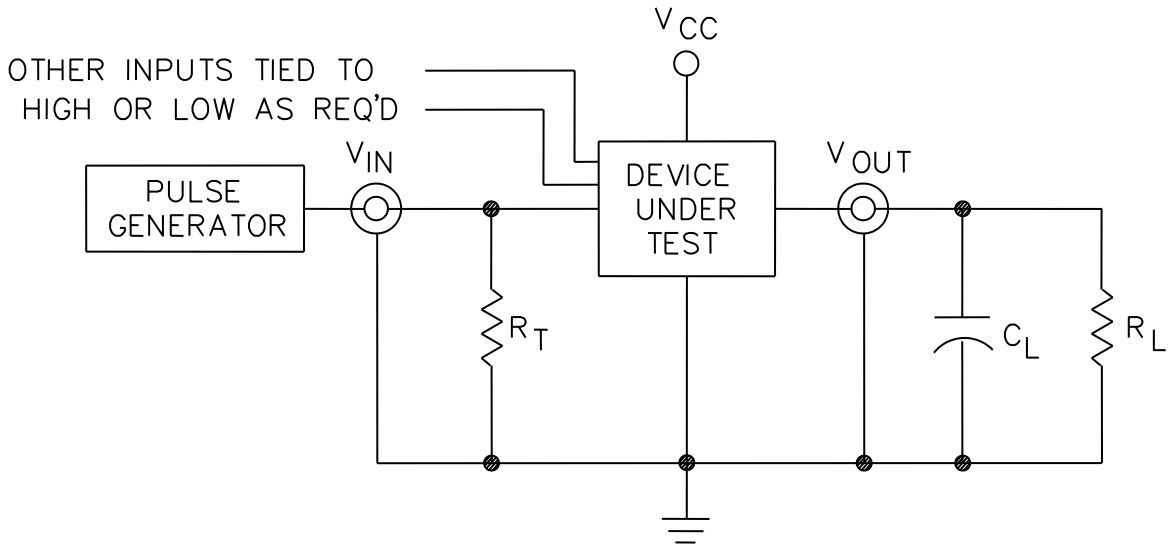


NOTES :

1. $C_L$ = 50 pF or equivalent, (includes probe and jig capacitance).
2. $R_T$ = 50Ω or equivalent. $R_L$ = 500Ω or equivalent.
3. Input signal from pulse generator: $V_{IN}$ = 0.0 V to $V_{CC}$; PRR ≤ 1 MHz; $Z_O$ = 50Ω; $t_r$ ≤ 3.0 ns; $t_f$ ≤ 3.0 ns; $t_r$ and $t_f$ shall be measured from 10% of $V_{CC}$ to 90% of $V_{CC}$ and from 90% of $V_{CC}$ to 10% of $V_{CC}$, respectively; duty cycle = 50 percent.
4. Timing parameters shall be tested at a minimum input frequency of 1 MHz.
5. The outputs are measured one at a time with one transition per measurement.

FIGURE 5. Switching waveforms and test circuit - Continued.



Downloaded from Arrow.com.

4. VERIFICATION

4.1 Sampling and inspection. For device classes Q and V, sampling and inspection procedures shall be in accordance with MIL-PRF-38535 or as modified in the device manufacturer's Quality Management (QM) plan. The modification in the QM plan shall not affect the form, fit, or function as described herein. For device class M, sampling and inspection procedures shall be in accordance with MIL-PRF-38535, appendix A.

4.2 Screening. For device classes Q and V, screening shall be in accordance with MIL-PRF-38535, and shall be conducted on all devices prior to qualification and technology conformance inspection. For device class M, screening shall be in accordance with method 5004 of MIL-STD-883, and shall be conducted on all devices prior to quality conformance inspection.

4.2.1 Additional criteria for device class M.

a. Burn-in test, method 1015 of MIL-STD-883.

(1) Test condition A, B, C, or D. The test circuit shall be maintained by the manufacturer under document revision level control and shall be made available to the preparing or acquiring activity upon request. The test circuit shall specify the inputs, outputs, biases, and power dissipation, as applicable, in accordance with the intent specified in method 1015.

(2) $T_A$ = +125°C, minimum.

b. Interim and final electrical test parameters shall be as specified in table IIA herein.

4.2.2 Additional criteria for device classes Q and V.

a. The burn-in test duration, test condition and test temperature, or approved alternatives shall be as specified in the device manufacturer's QM plan in accordance with MIL-PRF-38535. The burn-in test circuit shall be maintained under document revision level control of the device manufacturer's Technology Review Board (TRB) in accordance with MIL-PRF-38535 and shall be made available to the acquiring or preparing activity upon request. The test circuit shall specify the inputs, outputs, biases, and power dissipation, as applicable, in accordance with the intent specified in method 1015 of MIL-STD-883.

b. Interim and final electrical test parameters shall be as specified in table IIA herein.

c. Additional screening for device class V beyond the requirements of device class Q shall be as specified in MIL-PRF-38535, appendix B.

4.3 Qualification inspection for device classes Q and V. Qualification inspection for device classes Q and V shall be in accordance with MIL-PRF-38535. Inspections to be performed shall be those specified in MIL-PRF-38535 and herein for groups A, B, C, D, and E inspections (see 4.4.1 through 4.4.4).

4.4 Conformance inspection. Technology conformance inspection for classes Q and V shall be in accordance with MIL-PRF-38535 including groups A, B, C, D, and E inspections and as specified. Quality conformance inspection for device class M shall be in accordance with MIL-PRF-38535, appendix A and as specified herein. Inspections to be performed for device class M shall be those specified in method 5005 of MIL-STD-883 and herein for groups A, B, C, D, and E inspections (see 4.4.1 through 4.4.4).

4.4.1 Group A inspection.

a. Tests shall be as specified in table IIA herein.

b. For device class M, subgroups 7 and 8 tests shall be sufficient to verify the truth table in figure 2 herein. The test vectors used to verify the truth table shall, at a minimum, test all functions of each input and output. All possible input to output logic patterns per function shall be guaranteed, if not tested, to the truth table in figure 2, herein. For device classes Q and V, subgroups 7 and 8 shall include verifying the functionality of the device.

c. $C_{IN}$ and $C_{PD}$ shall be measured only for initial qualification and after process or design changes which may affect capacitance. $C_{IN}$ shall be measured between the designated terminal and GND at a frequency of 1 MHz. $C_{PD}$ shall be tested in accordance with the latest revision of JESD20 and table IA herein. For $C_{IN}$ and $C_{PD}$, test all applicable pins on five devices with zero failures.



Downloaded from Arrow.com.

TABLE IIA. Electrical test requirements.

| Test requirements | Subgroups (in accordance with MIL-STD-883, method 5005, table I) | Subgroups (in accordance with MIL-PRF-38535, table III) | |
|---|---|---|---|
| | Device class M | Device class Q | Device class V |
| Interim electrical parameters (see 4.2) | - - - | - - - | 1 |
| Final electrical parameters (see 4.2) | 1/ 1, 2, 3, 7, 8, 9 | 1/ 1, 2, 3, 7, 8, 9 | 2/, 3/ 1, 2, 3, 7, 8, 9, 10, 11 |
| Group A test requirements (see 4.4) | 1, 2, 3, 4, 7, 8, 9, 10, 11 | 1, 2, 3, 4, 7, 8, 9, 10, 11 | 1, 2, 3, 4, 7, 8, 9, 10, 11 |
| Group C end-point electrical parameters (see 4.4) | 1, 2, 3 | 1, 2, 3 | 3/ 1, 2, 3, 7,8, 9, 10, 11 |
| Group D end-point electrical parameters (see 4.4) | 1, 2, 3 | 1, 2, 3 | 1, 2, 3, 7, 9 |
| Group E end-point electrical parameters (see 4.4) | 1, 7, 9 | 1, 7, 9 | 1, 7, 9 |

1/ PDA applies to subgroup 1.
2/ PDA applies to subgroups 1, 7, and deltas.
3/ Delta limits, as specified in table IIB, shall be required where specified, and the delta limits shall be completed with reference to the zero hour electrical parameters.

TABLE IIB. Burn-in and operating life test, delta parameters (+25°C).

| Parameter 1/ | Symbol | Delta Limits |
|---|---|---|
| Quiescent supply current | $I_{CCH}$, $I_{CCL}$ | ±300 nA |
| Input current low level | $I_{IL}$ | ±20 nA |
| Input current high level | $I_{IH}$ | ±20 nA |
| Output voltage low level $V_{CC}$ = 5.5 V, $I_{OL}$ = +24 mA | $V_{OL}$ | ±0.04 V |
| Output voltage high level $V_{CC}$ = 5.5 V, $I_{OH}$ = -24 mA | $V_{OH}$ | ±0.2 V |

1/ These parameters shall be recorded before and after the required burn-in and life tests to determine the delta limits.

4.4.2 Group C inspection. The group C inspection end-point electrical parameters shall be as specified in table IIA herein.

4.4.2.1 Additional criteria for device class M. Steady-state life test conditions, method 1005 of MIL-STD-883:

a. Test condition A, B, C, or D. The test circuit shall be maintained by the manufacturer under document revision level control and shall be made available to the preparing or acquiring activity upon request. The test circuit shall specify the inputs, outputs, biases, and power dissipation, as applicable, in accordance with the intent specified in method 1005 of MIL-STD-883.

b. $T_A$ = +125°C, minimum.

c. Test duration: 1,000 hours, except as permitted by method 1005 of MIL-STD-883.



Downloaded from Arrow.com.

4.4.2.2 Additional criteria for device classes Q and V. The steady-state life test duration, test condition and test temperature, or approved alternatives shall be as specified in the device manufacturer's QM plan in accordance with MIL-PRF-38535. The test circuit shall be maintained under document revision level control by the device manufacturer's TRB in accordance with MIL-PRF-38535 and shall be made available to the acquiring or preparing activity upon request. The test circuit shall specify the inputs, outputs, biases, and power dissipation, as applicable, in accordance with the intent specified in method 1005 of MIL-STD-883.

4.4.3 Group D inspection. The group D inspection end-point electrical parameters shall be as specified in table IIA herein.

4.4.4 Group E inspection. Group E inspection is required only for parts intended to be marked as radiation hardness assured (see 3.5 herein).

a. End-point electrical parameters shall be as specified in table IIA herein.

b. For device classes Q and V, the devices or test vehicle shall be subjected to radiation hardness assured tests as specified in MIL-PRF-38535 for the RHA level being tested. For device class M, the devices shall be subjected to radiation hardness assured tests as specified in MIL-PRF-38535, appendix A for the RHA level being tested. All device classes must meet the postirradiation end-point electrical parameter limits as defined in table IA at $T_A$ = +25°C ±5°C, after exposure, to the subgroups specified in table IIA herein.

4.4.4.1 Total dose irradiation testing. Total dose irradiation testing shall be performed in accordance with MIL-STD-883, method 1019 condition A, and as specified herein.

a. Inputs tested high, $V_{CC}$ = 5.5 V dc +5%, $R_{CC}$ = 10 Ω +20%, $V_{IN}$ = 5.0 V dc +5%, $R_{IN}$ = 1 kΩ +20%, and all outputs are open.

b. Inputs tested low, $V_{CC}$ = 5.5 V dc +5%, $R_{CC}$ = 10 Ω +20%, $V_{IN}$ = 0.0 V dc, $R_{IN}$ = 1 kΩ+20%, and all outputs are open.

4.4.4.1.1 Accelerated annealing testing. Accelerated annealing testing shall be performed on all devices requiring a RHA level greater than 5k rads (Si). The post-anneal end-point electrical parameter limits shall be as specified in table IA herein and shall be the pre-irradiation end-point electrical parameter limits at 25°C ±5°C. Testing shall be performed at initial qualification and after any design or process changes which may affect the RHA response of the device.

4.4.4.2 Single event phenomena (SEP). When specified in the purchase order or contract, SEP testing shall be required on class V devices. SEP testing shall be performed on the Standard Evaluation Circuit (SEC) or alternate SEP test vehicle as approved by the qualifying activity at initial qualification and after any design or process changes which may affect the upset or latchup characteristics. Test four devices with zero failures. ASTM F1192 may be used as a guideline when performing SEP testing. The test conditions for SEP are as follows:

a. The ion beam angle of incidence shall be between normal to the die surface and 60° to the normal, inclusive (i.e. 0° ≤ angle ≤ 60°). No shadowing of the ion beam due to fixturing or package related effects is allowed.

b. The fluence shall be ≥ 100 errors or ≥ $10^7$ ions/cm$^2$.

c. The flux shall be between $10^2$ and $10^5$ ions/cm$^2$/s. The cross-section shall be verified to be flux independent by measuring the cross-section at two flux rates which differ by at least an order of magnitude.

d. The particle range shall be ≥ 20 micron in silicon.

e. The test temperature shall be +25°C for the upset measurements and the maximum rated operating temperature ±10°C for the latch-up measurements.

f. Bias conditions shall be defined by the manufacturer for the latch-up measurements.

g. For SEP test limits, see table IB herein.

4.5 Methods of inspection. Methods of inspection shall be specified as follows:

4.5.1 Voltage and current. Unless otherwise specified, all voltages given are referenced to the microcircuit GND terminal. Currents given are conventional current and positive when flowing into the referenced terminal.



Downloaded from Arrow.com.

5. PACKAGING

5.1 Packaging requirements. The requirements for packaging shall be in accordance with MIL-PRF-38535 for device classes Q and V or MIL-PRF-38535, appendix A for device class M.

6. NOTES

6.1 Intended use. Microcircuits conforming to this drawing are intended for use for Government microcircuit applications (original equipment), design applications, and logistics purposes.

6.1.1 Replaceability. Microcircuits covered by this drawing will replace the same generic device covered by a contractor-prepared specification or drawing.

6.2 Configuration control of SMD's. All proposed changes to existing SMD's will be coordinated with the users of record for the individual documents. This coordination will be accomplished using DD Form 1692, Engineering Change Proposal, or email communication.

6.3 Record of users. Military and industrial users should inform DLA Land and Maritime when a system application requires configuration control and which SMD's are applicable to that system. DLA Land and Maritime will maintain a record of users and this list will be used for coordination and distribution of changes to the drawings. Users of drawings covering microelectronic devices (FSC 5962) should contact DLA Land and Maritime-VA, telephone (614) 692-8108.

6.4 Comments. Comments on this drawing should be directed to DLA Land and Maritime-VA, Columbus, Ohio 43218-3990, or telephone (614) 692-0591.

6.5 Abbreviations, symbols, and definitions. The abbreviations, symbols, and definitions used herein are defined in MIL-PRF-38535 and MIL-HDBK-1331.

6.6 Sources of supply.

6.6.1 Sources of supply for device classes Q and V. Sources of supply for device classes Q and V are listed in MIL-HDBK-103 and QML-38535. The vendors listed in MIL-HDBK-103 and QML-38535 have submitted a certificate of compliance (see 3.6 herein) to DLA Land and Maritime-VA and have agreed to this drawing.

6.6.2 Approved sources of supply for device class M. Approved sources of supply for class M are listed in MIL-HDBK-103. The vendors listed in MIL-HDBK-103 have agreed to this drawing and a certificate of compliance (see 3.6 herein) has been submitted to and accepted by DLA Land and Maritime-VA.

6.7 Additional information. When specified in the purchase order or contract, a copy of the following additional data shall be supplied.

a. RHA test conditions of SEP.

b. Number of upsets (SEU).

c. SEU as written.

d. SEL as written.



Downloaded from Arrow.com.

STANDARD MICROCIRCUIT DRAWING BULLETIN

DATE: 25-02-20

Approved sources of supply for SMD 5962-89561 are listed below for immediate acquisition information only and shall be added to MIL-HDBK-103 and QML-38535 during the next revision. MIL-HDBK-103 and QML-38535 will be revised to include the addition or deletion of sources. The vendors listed below have agreed to this drawing and a certificate of compliance has been submitted to and accepted by DLA Land and Maritime-VA. This information bulletin is superseded by the next dated revision of MIL-HDBK-103 and QML-38535. DLA Land and Maritime maintains an online database of all current sources of supply at https://landandmaritimeapps.dla.mil/programs/smcr/.

| Standard microcircuit drawing PIN 1/ | Vendor CAGE number | Vendor similar PIN 2/ |
|---|---|---|
| 5962-8956101EA | 0C7V7 | 54AC161DMQB |
| | 3/ | EV54AC161DMQB |
| 5962-8956101FA | 0C7V7 | 54AC161FMQB |
| | 3/ | EV54AC161FMQB |
| 5962-89561012A | 0C7V7 | 54AC161LMQB |
| | 3/ | EV54AC161LMQB |
| 5962-8956101XA | 3/ | 54AC161K02Q |
| 5962-8956101VXA | 3/ | 54AC161K02V |
| 5962-8956101XC | 3/ | 54AC161K01Q |
| 5962-8956101VXC | 3/ | 54AC161K01V |
| 5962F8956101EA | F8859 | RHFAC161D04Q |
| 5962F8956101VEA | F8859 | RHFAC161D04V |
| 5962F8956101EC | F8859 | RHFAC161D03Q |
| 5962F8956101VEC | F8859 | RHFAC161D03V |
| 5962F8956101XA | F8859 | RHFAC161K02Q |
| 5962F8956101VXA | F8859 | RHFAC161K02V |
| 5962F8956101VYA | F8859 | RHFAC161K04V |
| 5962F8956101XC | F8859 | RHFAC161K01Q |
| 5962F8956101VXC | F8859 | RHFAC161K01V |
| 5962F8956101VYC | F8859 | RHFAC161K03V |

1/ The lead finish shown for each PIN representing a hermetic package is the most readily available from the manufacturer listed for that part. If the desired lead finish is not listed contact the vendor to determine its availability.
2/ Caution. Do not use this number for item acquisition. Items acquired to this number may not satisfy the performance requirements of this drawing.
3/ Not available from an approved source of supply.



Downloaded from Arrow.com.

| Vendor CAGE number | Vendor name and address |
|---|---|
| 0C7V7 | Teledyne e2v HiRel Electronics<br>765 Sycamore Drive<br>Milpitas, CA 95035 |
| F8859 | STMicroelectronics<br>3 rue de Suisse<br>CS 60816<br>35208 RENNES cedex2-FRANCE |

The information contained herein is disseminated for convenience only and the Government assumes no liability whatsoever for any inaccuracies in the information bulletin.



Downloaded from Arrow.com.