MICRO SWITCH
a Honeywell Division
FED.MFG.CODE 91929

SWITCH – BASIC

CATALOG LISTING
BM–2R559729

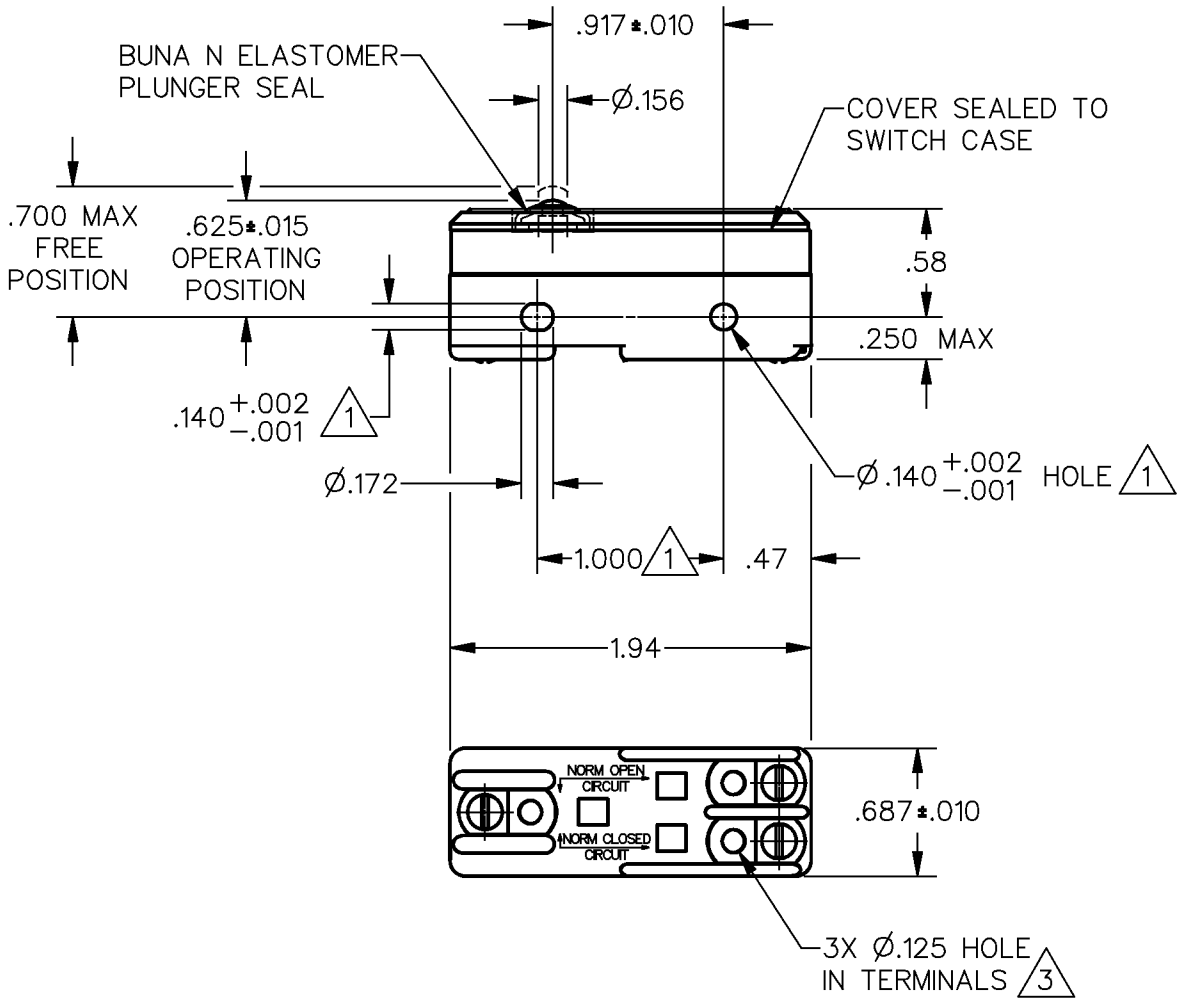

NOTES
1. MOUNTING HOLES WILL ACCEPT PINS OR SCREWS OF Ø.139 MAX ON 1.000±.002 CENTERS
2 – SEALED CONSTRUCTION PROVIDES SPLASH RESISTANCE
3. TERMINALS FORMED AT (15°) TO BOTTOM OF SWITCH

ANSI Y14.5M–1982 APPLIES

THIS DRAWING COVERS A PROPRIETARY ITEM AND IS THE PROPERTY OF MICRO SWITCH, A DIVISION OF HONEYWELL. THIS DRAWING IS NOT TO BE COPIED OR USED WITHOUT THE APPROVAL OF MICRO SWITCH.

THIRD ANGLE PROJECTION

CHARACTERISTICS	ELECTRICAL DATA	SCALE FULL / DO NOT SCALE PRINT
OPERATING FORCE — — — — 15–21 OZ	CONTACT ARRANGEMENT: SPDT	UNLESS OTHERWISE SPECIFIED TOLERANCES ARE
RELEASE FORCE — — — — 8 OZ MIN	L167: 22A 125, 250 OR 277 VAC; 3/4HP 125 VAC, 1 1/2HP 250 VAC	ONE PLACE (.0) ±.030
DIFFERENTIAL TRAVEL — — — .003 MAX	L288, L315, L318: 22A 250V ~ T85 5E4	TWO PLACE (.00) ±.015
OVERTRAVEL — — — — — — .005 MIN		THREE PLACE (.000) ±.005
		ANGLES ±
		WEIGHT .053 LBS

CATALOG LISTING BM–2R559729 PAGE 1 OF 1
ISSUE 3
RELEASE NO. PR–22604
REPLACES X100890–BM

REVISIONS			
A	CO-94212-K	DLT 4 NOV 99	
B	0035413	JA 07DEC07	07DEC07

DRAWN	CHECK	CHECK	CHECK	CHECK
RASTER	JJA 15 MAY 97	JJA 15 MAY 97	ASD	07DEC07

Downloaded from Arrow.com.