Dual NPN Bias Resistor Transistors
R1 = 22 kΩ, R2 = 47 kΩ

NPN Transistors with Monolithic Bias Resistor Network

MUN5234DW1, NSBC124XDXV6

This series of digital transistors is designed to replace a single device and its external resistor bias network. The Bias Resistor Transistor (BRT) contains a single transistor with a monolithic bias network consisting of two resistors; a series base resistor and a base-emitter resistor. The BRT eliminates these individual components by integrating them into a single device. The use of a BRT can reduce both system cost and board space.

Features

- Simplifies Circuit Design
- Reduces Board Space
- Reduces Component Count
- S and NSV Prefix for Automotive and Other Applications Requiring Unique Site and Control Change Requirements; AEC-Q101 Qualified and PPAP Capable
- These Devices are Pb-Free, Halogen Free/BFR Free and are RoHS Compliant

MAXIMUM RATINGS

(T_A = 25 °C, common for Q_1 and Q_2, unless otherwise noted)

Symbol	Rating	Max	Unit
V_{CBO}	Collector-Base Voltage	50	Vdc
V_{CEO}	Collector-Emitter Voltage	50	Vdc
I_C	Collector Current – Continuous	100	mAdc
$V_{IN(fwd)}$	Input Forward Voltage	40	Vdc
$V_{IN(rev)}$	Input Reverse Voltage	7	Vdc

Stresses exceeding those listed in the Maximum Ratings table may damage the device. If any of these limits are exceeded, device functionality should not be assumed, damage may occur and reliability may be affected.

SOT-363
CASE 419B

SOT-563
CASE 463A

PIN CONNECTIONS

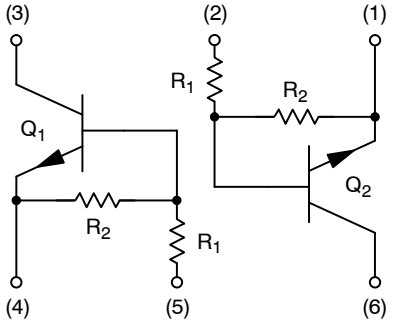

MARKING DIAGRAMS

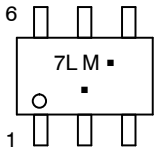

SOT-363
CASE 419B

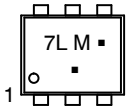

SOT-563
CASE 463A

7L = Specific Device Code
M = Date Code*
▪ = Pb-Free Package

(Note: Microdot may be in either location)

* Date Code orientation may vary depending upon manufacturing location.

ORDERING INFORMATION

See detailed ordering and shipping information on page 2 of this data sheet.

© Semiconductor Components Industries, LLC, 2012

Downloaded from Arrow.com.

ORDERING INFORMATION

Device	Marking	Package	Shipping†
MUN5234DW1T1G MUN5234DW1T1G-NC	7L	SOT-363 (Pb-Free)	3,000 / Tape & Reel
NSBC124XDXV6T1G NSBC124XDXV6T1G-NC (Under Development) NSVBC124XDXV6T1G* NSVBC124XDXV6T1G-NC* (Under Development)		SOT-563 (Pb-Free)	4,000 / Tape & Reel

† For information on tape and reel specifications, including part orientation and tape sizes, please refer to our Tape and Reel Packaging Specifications Brochure, BRD8011/D.

* S, V and NSV Prefix for Automotive and Other Applications Requiring Unique Site and Control Change Requirements; AEC-Q101 Qualified and PPAP Capable.

THERMAL CHARACTERISTICS

Characteristic		Symbol	Max	Unit
MUN5234DW1 (SOT-363) ONE JUNCTION HEATED				
Total Device Dissipation T_A = 25 °C (Note 2) Derate above 25 °C (Note 2)	 (Note 1) (Note 1) 	P_D	 187 256 1.5 2.0	 mW mW/°C
Thermal Resistance, Junction to Ambient	(Note 1) (Note 2)	$R_{\theta JA}$	670 490	°C/W
MUN5234DW1 (SOT-363) BOTH JUNCTION HEATED (Note 3)				
Total Device Dissipation T_A = 25 °C (Note 2) Derate above 25 °C (Note 2)	 (Note 1) (Note 1) 	P_D	 250 385 2.0 3.0	 mW mW/°C
Thermal Resistance, Junction to Ambient (Note 2)	 (Note 1) 	$R_{\theta JA}$	 493 325	°C/W
Thermal Resistance, Junction to Lead (Note 2)	 (Note 1) 	$R_{\theta JL}$	 188 208	°C/W
Junction and Storage Temperature Range		T_J, T_{stg}	−55 to +150	°C
NSBC124XDXV6 (SOT-563) ONE JUNCTION HEATED				
Total Device Dissipation T_A = 25 °C Derate above 25 °C	 (Note 1) (Note 1)	P_D	 357 2.9	 mW mW/°C
Thermal Resistance, Junction to Ambient	 (Note 1)	$R_{\theta JA}$	 350	°C/W
NSBC124XDXV6 (SOT-563) BOTH JUNCTION HEATED (Note 3)				
Total Device Dissipation T_A = 25 °C Derate above 25 °C	 (Note 1) (Note 1)	P_D	 500 4.0	 mW mW/°C
Thermal Resistance, Junction to Ambient	 (Note 1)	$R_{\theta JA}$	 250	°C/W
Junction and Storage Temperature Range		T_J, T_{stg}	−55 to +150	°C

1. FR-4 @ Minimum Pad.
2. FR-4 @ 1.0 × 1.0 Inch Pad.
3. Both junction heated values assume total power is sum of two equally powered channels.

Share Feedback
Your Opinion Matters

Downloaded from Arrow.com.

ELECTRICAL CHARACTERISTICS (T_A = 25 °C, common for Q_1 and Q_2, unless otherwise noted)

Characteristic	Symbol	Min	Typ	Max	Unit
OFF CHARACTERISTICS					
Collector-Base Cutoff Current (V_{CB} = 50 V, I_E = 0)	I_{CBO}	–	–	100	nAdc
Collector-Emitter Cutoff Current (V_{CE} = 50 V, I_B = 0)	I_{CEO}	–	–	500	nAdc
Emitter-Base Cutoff Current (V_{EB} = 6.0 V, I_C = 0)	I_{EBO}	–	–	0.13	mAdc
Collector-Base Breakdown Voltage (I_C = 10 μA, I_E = 0)	$V_{(BR)CBO}$	50	–	–	Vdc
Collector-Emitter Breakdown Voltage (Note 4) (I_C = 2.0 mA, I_B = 0)	$V_{(BR)CEO}$	50	–	–	Vdc
ON CHARACTERISTICS					
DC Current Gain (Note 4) (I_C = 5.0 mA, V_{CE} = 10 V)	h_{FE}	80	150	–	
Collector-Emitter Saturation Voltage (Note 4) (I_C = 10 mA, I_B = 1.0 mA)	$V_{CE(sat)}$	–	–	0.25	V
Input Voltage (Off) (V_{CE} = 5.0 V, I_C = 100 μA)	$V_{i(off)}$	–	0.8	–	Vdc
Input Voltage (On) (V_{CE} = 0.2 V, I_C = 3.0 mA)	$V_{i(on)}$	–	1.3	–	Vdc
Output Voltage (On) (V_{CC} = 5.0 V, V_B = 2.5 V, R_L = 1.0 kΩ)	V_{OL}	–	–	0.2	Vdc
Output Voltage (Off) (V_{CC} = 5.0 V, V_B = 0.5 V, R_L = 1.0 kΩ)	V_{OH}	4.9	–	–	Vdc
Input Resistor	R1	15.4	22	28.6	kΩ
Resistor Ratio	R_1/R_2	0.38	0.47	0.56	

Product parametric performance is indicated in the Electrical Characteristics for the listed test conditions, unless otherwise noted. Product performance may not be indicated by the Electrical Characteristics if operated under different conditions.

4. Pulsed Condition: Pulse Width = 300 ms, Duty Cycle ≤ 2%.

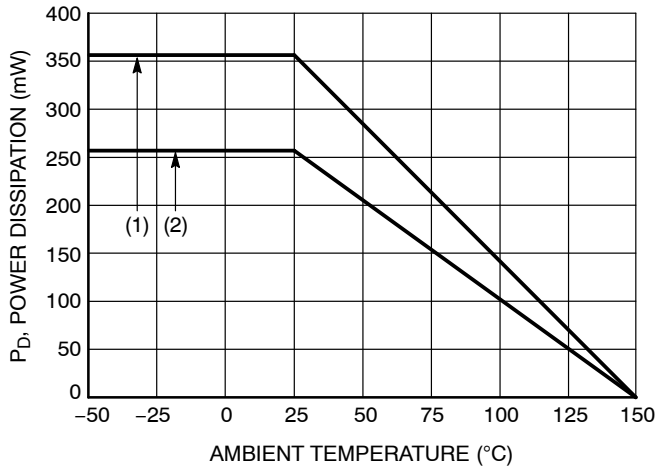

(1) SOT-363; 1.0 × 1.0 Inch Pad
(2) SOT-563; Minimum Pad

Figure 1. Derating Curve

Share Feedback
Your Opinion Matters

Downloaded from Arrow.com.

TYPICAL CHARACTERISTICS
MUN5234DW1, NSBC124XDXV6

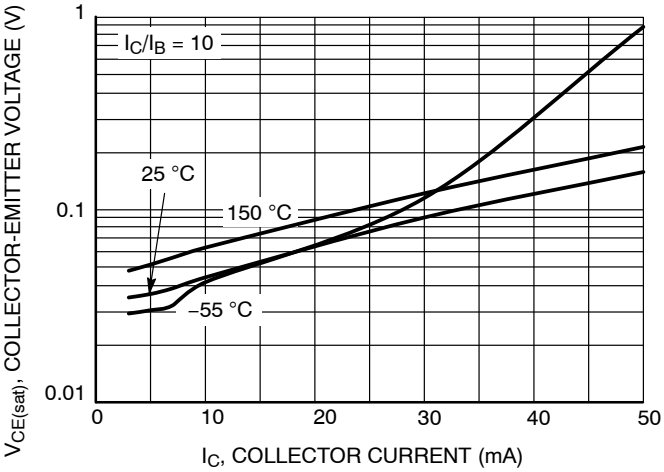

Figure 2. $V_{CE(sat)}$ vs. I_C

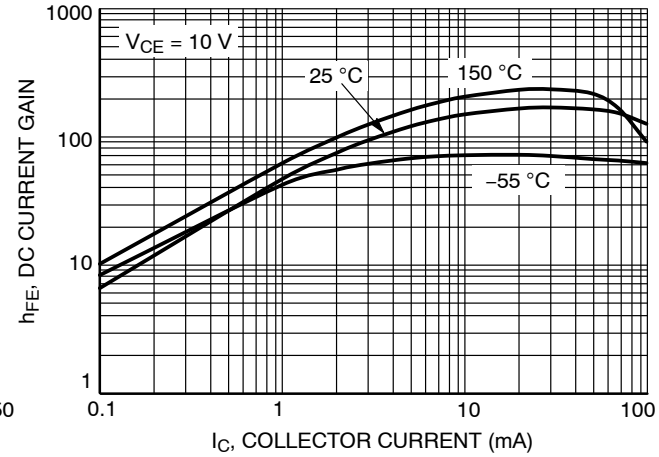

Figure 3. DC Current Gain

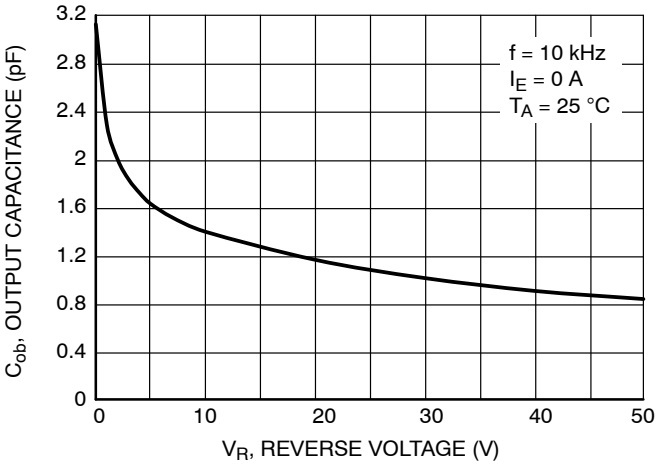

Figure 4. Output Capacitance

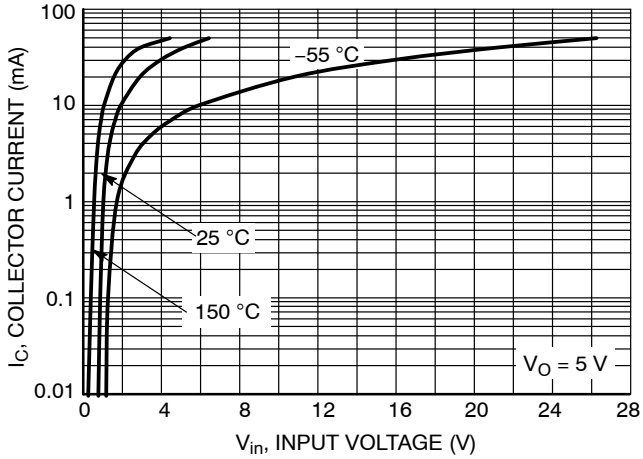

Figure 5. Output Current vs. Input Voltage

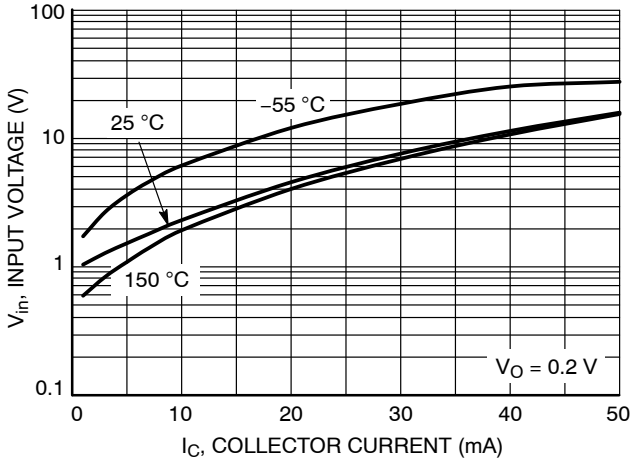

Figure 6. Input Voltage vs. Output Current

Share Feedback
Your Opinion Matters

Downloaded from Arrow.com.

REVISION HISTORY

Revision	Description of Changes	Date
3	Added “-NC” OPNs to order table.	9/25/2026

This document has undergone updates prior to the inclusion of this revision history table. The changes tracked here only reflect updates made on the noted approval dates.

Share Feedback
Your Opinion Matters

Downloaded from Arrow.com.

SC−88 2.00x1.25x0.90, 0.65P
CASE 419B−02
ISSUE Z

DATE 18 APR 2024

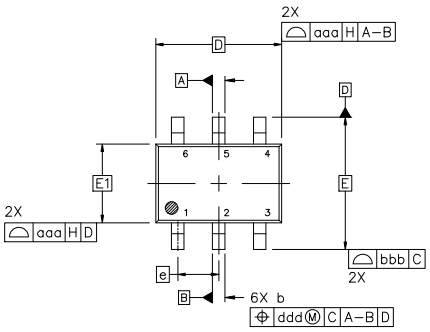

TOP VIEW

NOTES:

1. DIMENSIONING AND TOLERANCING CONFORM TO ASME Y14.5−2018.
2. ALL DIMENSION ARE IN MILLIMETERS.
3. DIMENSIONS D AND E1 DO NOT INCLUDE MOLD FLASH, PROTRUSIONS, OR GATE BURRS. MOLD FLASH, PROTRUSIONS, OR GATE BURRS SHALL NOT EXCEED 0.20 PER END.
4. DIMENSIONS D AND E1 AT THE OUTERMOST EXTREMES OF THE PLASTIC BODY AND DATUM H.
5. DATUMS A AND B ARE DETERMINED AT DATUM H.
6. DIMENSIONS b AND c APPLY TO THE FLAT SECTION OF THE LEAD BETWEEN 0.08 AND 0.15 FROM THE TIP.
7. DIMENSION b DOES NOT INCLUDE DAMBAR PROTRUSION. ALLOWABLE DAMBAR PROTRUSION SHALL BE 0.08 TOTAL IN EXCESS OF DIMENSION b AT MAXIMUM MATERIAL CONDITION. THE DAMBAR CANNOT BE LOCATED ON THE LOWER RADIUS OF THE FOOT.

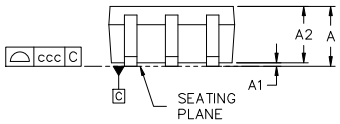

SIDE VIEW

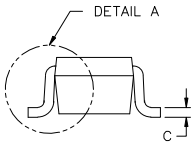

END VIEW

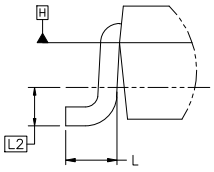

DETAIL A
SCALE 2:1

DIM	MILLIMETERS		
	MIN.	NOM.	MAX.
A	−−−	−−−	1.10
A1	0.00	−−−	0.10
A2	0.70	0.90	1.00
b	0.15	0.20	0.25
c	0.08	0.15	0.22
D	2.00 BSC		
E	2.10 BSC		
E1	1.25 BSC		
e	0.65 BSC		
L	0.26	0.36	0.46
L2	0.15 BSC		
aaa	0.15		
bbb	0.30		
ccc	0.10		
ddd	0.10		

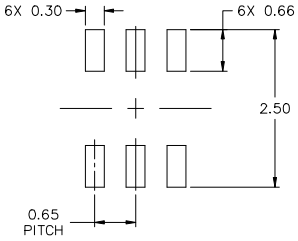

RECOMMENDED MOUNTING FOPTPRINT*

* FOR ADDITIONAL INFORMATION ON OUR Pb−FREE STRATEGY AND SOLDERING DETAILS, PLEASE DOWNLOAD THE ONSEMI SOLDERING AND MOUNTING TECHNIQUES REFERENCE MANUAL, SOLDERRM/D.

GENERIC MARKING DIAGRAM*

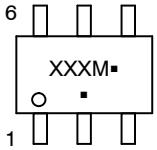

XXX = Specific Device Code
M = Date Code*
▪ = Pb−Free Package

(Note: Microdot may be in either location)

*Date Code orientation and/or position may vary depending upon manufacturing location.

*This information is generic. Please refer to device data sheet for actual part marking. Pb−Free indicator, “G” or microdot “▪”, may or may not be present. Some products may not follow the Generic Marking.

STYLES ON PAGE 2

DOCUMENT NUMBER:	98ASB42985B	Electronic versions are uncontrolled except when accessed directly from the Document Repository. Printed versions are uncontrolled except when stamped “CONTROLLED COPY” in red.
DESCRIPTION:	SC−88 2.00x1.25x0.90, 0.65P	PAGE 1 OF 2

onsemi and onsemi are trademarks of Semiconductor Components Industries, LLC dba **onsemi** or its subsidiaries in the United States and/or other countries. **onsemi** reserves the right to make changes without further notice to any products herein. **onsemi** makes no warranty, representation or guarantee regarding the suitability of its products for any particular purpose, nor does **onsemi** assume any liability arising out of the application or use of any product or circuit, and specifically disclaims any and all liability, including without limitation special, consequential or incidental damages. **onsemi** does not convey any license under its patent rights nor the rights of others.

© Semiconductor Components Industries, LLC, 2019

Downloaded from Arrow.com.

SC−88 2.00x1.25x0.90, 0.65P
CASE 419B−02
ISSUE Z

DATE 18 APR 2024

STYLE 1:
PIN 1. EMITTER 2
2. BASE 2
3. COLLECTOR 1
4. EMITTER 1
5. BASE 1
6. COLLECTOR 2

STYLE 2:
CANCELLED

STYLE 3:
CANCELLED

STYLE 4:
PIN 1. CATHODE
2. CATHODE
3. COLLECTOR
4. EMITTER
5. BASE
6. ANODE

STYLE 5:
PIN 1. ANODE
2. ANODE
3. COLLECTOR
4. EMITTER
5. BASE
6. CATHODE

STYLE 6:
PIN 1. ANODE 2
2. N/C
3. CATHODE 1
4. ANODE 1
5. N/C
6. CATHODE 2

STYLE 7:
PIN 1. SOURCE 2
2. DRAIN 2
3. GATE 1
4. SOURCE 1
5. DRAIN 1
6. GATE 2

STYLE 8:
CANCELLED

STYLE 9:
PIN 1. EMITTER 2
2. EMITTER 1
3. COLLECTOR 1
4. BASE 1
5. BASE 2
6. COLLECTOR 2

STYLE 10:
PIN 1. SOURCE 2
2. SOURCE 1
3. GATE 1
4. DRAIN 1
5. DRAIN 2
6. GATE 2

STYLE 11:
PIN 1. CATHODE 2
2. CATHODE 2
3. ANODE 1
4. CATHODE 1
5. CATHODE 1
6. ANODE 2

STYLE 12:
PIN 1. ANODE 2
2. ANODE 2
3. CATHODE 1
4. ANODE 1
5. ANODE 1
6. CATHODE 2

STYLE 13:
PIN 1. ANODE
2. N/C
3. COLLECTOR
4. EMITTER
5. BASE
6. CATHODE

STYLE 14:
PIN 1. VREF
2. GND
3. GND
4. IOUT
5. VEN
6. VCC

STYLE 15:
PIN 1. ANODE 1
2. ANODE 2
3. ANODE 3
4. CATHODE 3
5. CATHODE 2
6. CATHODE 1

STYLE 16:
PIN 1. BASE 1
2. EMITTER 2
3. COLLECTOR 2
4. BASE 2
5. EMITTER 1
6. COLLECTOR 1

STYLE 17:
PIN 1. BASE 1
2. EMITTER 1
3. COLLECTOR 2
4. BASE 2
5. EMITTER 2
6. COLLECTOR 1

STYLE 18:
PIN 1. VIN1
2. VCC
3. VOUT2
4. VIN2
5. GND
6. VOUT1

STYLE 19:
PIN 1. I OUT
2. GND
3. GND
4. V CC
5. V EN
6. V REF

STYLE 20:
PIN 1. COLLECTOR
2. COLLECTOR
3. BASE
4. EMITTER
5. COLLECTOR
6. COLLECTOR

STYLE 21:
PIN 1. ANODE 1
2. N/C
3. ANODE 2
4. CATHODE 2
5. N/C
6. CATHODE 1

STYLE 22:
PIN 1. D1 (i)
2. GND
3. D2 (i)
4. D2 (c)
5. VBUS
6. D1 (c)

STYLE 23:
PIN 1. Vn
2. CH1
3. Vp
4. N/C
5. CH2
6. N/C

STYLE 24:
PIN 1. CATHODE
2. ANODE
3. CATHODE
4. CATHODE
5. CATHODE
6. CATHODE

STYLE 25:
PIN 1. BASE 1
2. CATHODE
3. COLLECTOR 2
4. BASE 2
5. EMITTER
6. COLLECTOR 1

STYLE 26:
PIN 1. SOURCE 1
2. GATE 1
3. DRAIN 2
4. SOURCE 2
5. GATE 2
6. DRAIN 1

STYLE 27:
PIN 1. BASE 2
2. BASE 1
3. COLLECTOR 1
4. EMITTER 1
5. EMITTER 2
6. COLLECTOR 2

STYLE 28:
PIN 1. DRAIN
2. DRAIN
3. GATE
4. SOURCE
5. DRAIN
6. DRAIN

STYLE 29:
PIN 1. ANODE
2. ANODE
3. COLLECTOR
4. EMITTER
5. BASE/ANODE
6. CATHODE

STYLE 30:
PIN 1. SOURCE 1
2. DRAIN 2
3. DRAIN 2
4. SOURCE 2
5. GATE 1
6. DRAIN 1

Note: Please refer to datasheet for style callout. If style type is not called out in the datasheet refer to the device datasheet pinout or pin assignment.

DOCUMENT NUMBER:	**98ASB42985B**	Electronic versions are uncontrolled except when accessed directly from the Document Repository. Printed versions are uncontrolled except when stamped "CONTROLLED COPY" in red.
DESCRIPTION:	**SC−88 2.00x1.25x0.90, 0.65P**	**PAGE 2 OF 2**

onsemi and ONSEMI are trademarks of Semiconductor Components Industries, LLC dba **onsemi** or its subsidiaries in the United States and/or other countries. **onsemi** reserves the right to make changes without further notice to any products herein. **onsemi** makes no warranty, representation or guarantee regarding the suitability of its products for any particular purpose, nor does **onsemi** assume any liability arising out of the application or use of any product or circuit, and specifically disclaims any and all liability, including without limitation special, consequential or incidental damages. **onsemi** does not convey any license under its patent rights nor the rights of others.

Downloaded from Arrow.com.

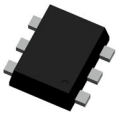

SOT−563−6 1.60x1.20x0.55, 0.50P
CASE 463A
ISSUE J

DATE 15 FEB 2024

NOTES:
1. DIMENSIONING AND TOLERANCING CONFORM TO ASME Y14.5−2018.
2. ALL DIMENSION ARE IN MILLIMETERS.
3. MAXIMUM LEAD THICKNESS INCLUDES LEAD FINISH THICKNESS. MINIMUM LEAD THICKNESS IS THE MINIMUM THICKNESS OF BASE MATERIAL.

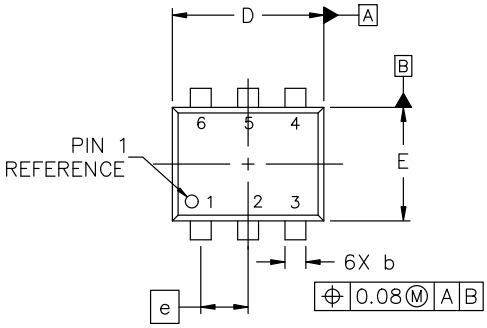

TOP VIEW

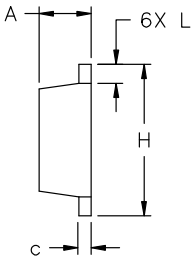

SIDE VIEW

DIM	MILLIMETERS		
	MIN.	NOM.	MAX.
A	0.50	0.55	0.60
b	0.17	0.22	0.27
c	0.08	0.13	0.18
D	1.50	1.60	1.70
E	1.10	1.20	1.30
e	0.50 BSC		
H	1.50	1.60	1.70
L	0.10	0.20	0.30

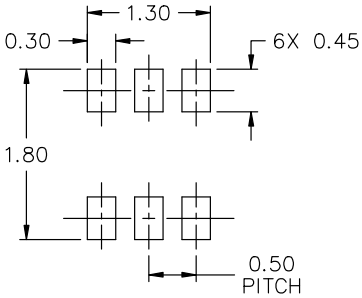

RECOMMENDED MOUNTING FOOTPRINT*

* FOR ADDITIONAL INFORMATION ON OUR Pb−FREE STRATEGY AND SOLDERING DETAILS, PLEASE DOWNLOAD THE ON SEMICONDUCTOR SOLDERING AND MOUNTING TECHNIQUES REFERENCE MANUAL, SOLDERRM/D.

STYLE 1:
PIN 1. EMITTER 1
2. BASE 1
3. COLLECTOR 2
4. EMITTER 2
5. BASE 2
6. COLLECTOR 1

STYLE 2:
PIN 1. EMITTER 1
2. EMITTER 2
3. BASE 2
4. COLLECTOR 2
5. BASE 1
6. COLLECTOR 1

STYLE 3:
PIN 1. CATHODE 1
2. CATHODE 1
3. ANODE/ANODE 2
4. CATHODE 2
5. CATHODE 2
6. ANODE/ANODE 1

STYLE 4:
PIN 1. COLLECTOR
2. COLLECTOR
3. BASE
4. EMITTER
5. COLLECTOR
6. COLLECTOR

STYLE 5:
PIN 1. CATHODE
2. CATHODE
3. ANODE
4. ANODE
5. CATHODE
6. CATHODE

STYLE 6:
PIN 1. CATHODE
2. ANODE
3. CATHODE
4. CATHODE
5. CATHODE
6. CATHODE

STYLE 7:
PIN 1. CATHODE
2. ANODE
3. CATHODE
4. CATHODE
5. ANODE
6. CATHODE

STYLE 8:
PIN 1. DRAIN
2. DRAIN
3. GATE
4. SOURCE
5. DRAIN
6. DRAIN

STYLE 9:
PIN 1. SOURCE 1
2. GATE 1
3. DRAIN 2
4. SOURCE 2
5. GATE 2
6. DRAIN 1

STYLE 10:
PIN 1. CATHODE 1
2. N/C
3. CATHODE 2
4. ANODE 2
5. N/C
6. ANODE 1

STYLE 11:
PIN 1. EMITTER 2
2. BASE 2
3. COLLECTOR 1
4. EMITTER 1
5. BASE 1
6. COLLECTOR 2

GENERIC MARKING DIAGRAM*

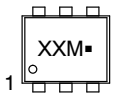

XX = Specific Device Code
M = Month Code
▪ = Pb−Free Package

*This information is generic. Please refer to device data sheet for actual part marking. Pb−Free indicator, "G" or microdot "▪", may or may not be present. Some products may not follow the Generic Marking.

DOCUMENT NUMBER:	98AON11126D	Electronic versions are uncontrolled except when accessed directly from the Document Repository. Printed versions are uncontrolled except when stamped "CONTROLLED COPY" in red.
DESCRIPTION:	SOT−563−6 1.60x1.20x0.55, 0.50P	PAGE 1 OF 1

onsemi and onsemi are trademarks of Semiconductor Components Industries, LLC dba **onsemi** or its subsidiaries in the United States and/or other countries. **onsemi** reserves the right to make changes without further notice to any products herein. **onsemi** makes no warranty, representation or guarantee regarding the suitability of its products for any particular purpose, nor does **onsemi** assume any liability arising out of the application or use of any product or circuit, and specifically disclaims any and all liability, including without limitation special, consequential or incidental damages. **onsemi** does not convey any license under its patent rights nor the rights of others.

Downloaded from Arrow.com.

onsemi, onsemi, and other names, marks, and brands are registered and/or common law trademarks of Semiconductor Components Industries, LLC dba "**onsemi**" or its affiliates and/or subsidiaries in the United States and/or other countries. **onsemi** owns the rights to a number of patents, trademarks, copyrights, trade secrets, and other intellectual property. A listing of **onsemi**'s product/patent coverage may be accessed at www.onsemi.com/site/pdf/Patent−Marking.pdf. **onsemi** reserves the right to make changes at any time to any products or information herein, without notice. The information herein is provided "as−is" and **onsemi** makes no warranty, representation or guarantee regarding the accuracy of the information, product features, availability, functionality, or suitability of its products for any particular purpose, nor does **onsemi** assume any liability arising out of the application or use of any product or circuit, and specifically disclaims any and all liability, including without limitation special, consequential or incidental damages. Buyer is responsible for its products and applications using **onsemi** products, including compliance with all laws, regulations and safety requirements or standards, regardless of any support or applications information provided by **onsemi**. "Typical" parameters which may be provided in **onsemi** data sheets and/or specifications can and do vary in different applications and actual performance may vary over time. All operating parameters, including "Typicals" must be validated for each customer application by customer's technical experts. **onsemi** does not convey any license under any of its intellectual property rights nor the rights of others. **onsemi** products are not designed, intended, or authorized for use as a critical component in life support systems or any FDA Class 3 medical devices or medical devices with a same or similar classification in a foreign jurisdiction or any devices intended for implantation in the human body. Should Buyer purchase or use **onsemi** products for any such unintended or unauthorized application, Buyer shall indemnify and hold **onsemi** and its officers, employees, subsidiaries, affiliates, and distributors harmless against all claims, costs, damages, and expenses, and reasonable attorney fees arising out of, directly or indirectly, any claim of personal injury or death associated with such unintended or unauthorized use, even if such claim alleges that **onsemi** was negligent regarding the design or manufacture of the part. **onsemi** is an Equal Opportunity/Affirmative Action Employer. This literature is subject to all applicable copyright laws and is not for resale in any manner.

ADDITIONAL INFORMATION

TECHNICAL PUBLICATIONS:
Technical Library: www.onsemi.com/design/resources/technical−documentation
onsemi Website: www.onsemi.com

ONLINE SUPPORT: www.onsemi.com/support
For additional information, please contact your local Sales Representative at www.onsemi.com/support/sales

Downloaded from Arrow.com.