THIS DRAWING IS UNPUBLISHED. RELEASED FOR PUBLICATION 2014
© COPYRIGHT 2014 Tyco Electronics AMP GmbH ALL RIGHTS RESERVED.

LOC	DIST
IT	-

REVISIONS

P	LTR	DESCRIPTION	DATE	DWN	APVD
	A3	ECR-17-002833	27FEB2017	CS	VVB
	B	ECR-19-014414	16SEP2019	STK	VVB
	B1	ECO-20-016025	09NOV2020	STK	DH
	B2	PCN: E-21-002727	08MAR2021	AP	DH

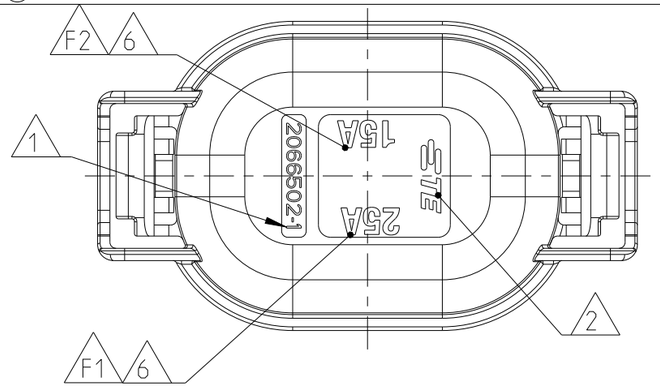

TABLE 1

FUSE CURRENT MATRIX (B1) (B2)

PART NO.	~~2066502-1~~ 1-2066502-1	~~2066502-2~~ 1-2066502-2	~~2066502-3~~ 1-2066502-3	1-2066502-4
F1	25A	25A	-	15A
F2	15A	10A	-	10A

1:1

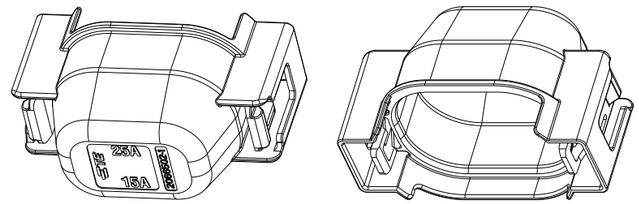

A-A

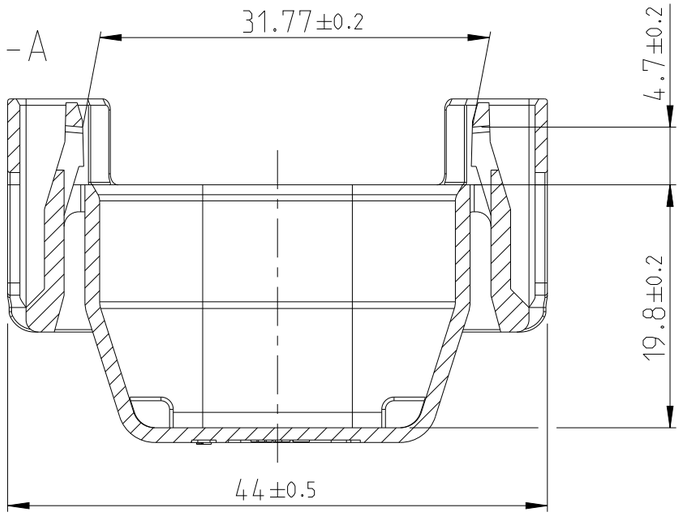

C-C

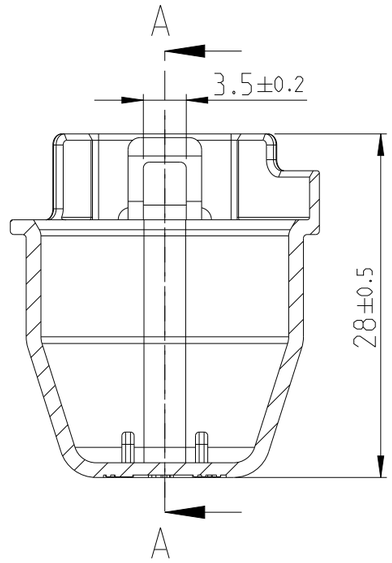

1. TE PART NO.
2. TE TRADEMARK
3. PART REVISION INDEX
4. MATERIAL IDENTIFICATION
5. MOLD CAVITY IDENTIFICATION NUMBER
6. MARKING FOR CURRENT RATING
7. 15% MAX. PERMITTED REGRIND MATERIAL, PROCESSED IN CLOSED LOOP.
8. DRAWING SHOWN FOR P/N: 2066502-1. REFER TABLE 1 FOR DETAILS REGARDING OTHER PART NUMBERS.

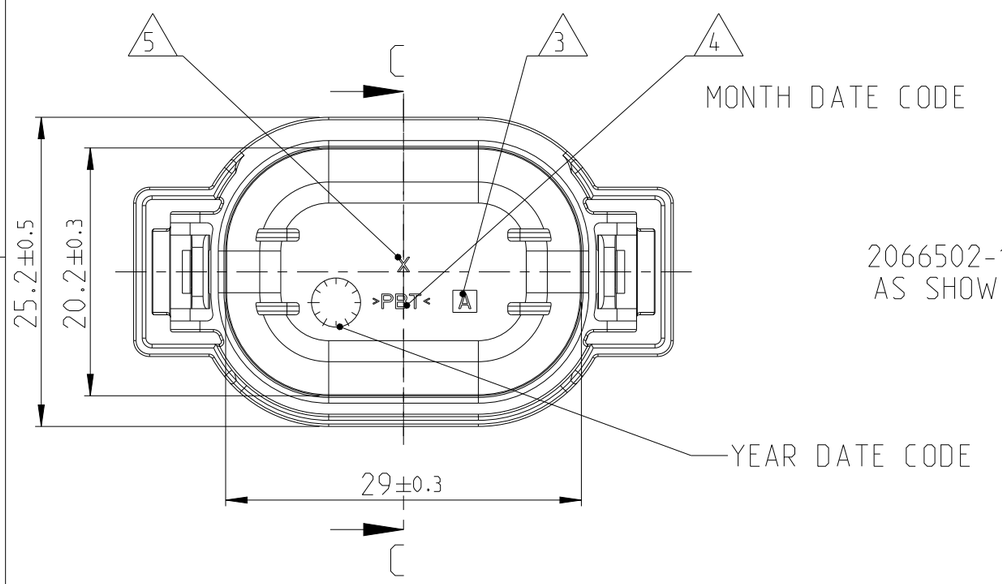

2066502-1
AS SHOWN

(B2)

	PART STATUS	TE PART NO	REV	DESCRIPTION	MATERIAL	WEIGHT [g]	SURFACE COLOR	ITEM
	ACTIVE	1-2066502-4	A	COVER, MINI FUSE 2POS.	PBT(Source 2)	5	BLACK	7
		1-2066502-3	A	COVER, MINI FUSE 2POS.		5	BLACK	6
		1-2066502-2	A	COVER, MINI FUSE 2POS.		5	GRAY	5
		1-2066502-1	A	COVER, MINI FUSE 2POS.		5	BLACK	4
(B2)	SUPERSEDED BY 1-2066502-3	~~2066502-3~~	~~A~~	~~COVER, MINI FUSE 2POS.~~	PBT(Source 1)	~~5~~	~~BLACK~~	~~3~~
(B1)	SUPERSEDED BY 1-2066502-2	~~2066502-2~~	~~A~~	~~COVER, MINI FUSE 2POS.~~		~~5~~	~~GRAY~~	~~2~~
(B1)	SUPERSEDED BY 1-2066502-1	~~2066502-1~~	~~A~~	~~COVER, MINI FUSE 2POS.~~		~~5~~	~~BLACK~~	~~1~~

THIS DRAWING IS A CONTROLLED DOCUMENT.

DIMENSIONS: mm

TOLERANCES UNLESS OTHERWISE SPECIFIED: DIN 16901-140

0 PLC	±
1 PLC	±
2 PLC	±
3 PLC	±
4 PLC	±
ANGLES	±1°

MATERIAL SEE TABLE

FINISH -

DWN	VISHWA. A	19JUN2012
CHK	MADHUL. L	13JUL2012
APVD	MADHUL. L	13JUL2012
PRODUCT SPEC	108-72108	
APPLICATION SPEC	-	
WEIGHT	-	

TE Connectivity

NAME COVER, 2POS MINIFUSE BOX HOUSING

-

SIZE	CAGE CODE	DRAWING NO	RESTRICTED TO
A3	00779	C-2066502	

CUSTOMER DRAWING | SCALE 2:1 | SHEET 1 OF 1 | REV B2

1470-19 (3/11)

Downloaded from Arrow.com.