500 mA, Very Low Dropout Bias Rail CMOS Voltage Regulator

NCP133



XDFN6
CASE 711AT

The NCP133 is a 500 mA VLDO equipped with NMOS pass transistor and a separate bias supply voltage (V_{BIAS}). The device provides very stable, accurate output voltage with low noise suitable for space constrained, noise sensitive applications. In order to optimize performance for battery operated portable applications, the NCP133 features low I_Q consumption. The XDFN6 1.2 mm x 1.2 mm package is optimized for use in space constrained applications.

Features

- Input Voltage Range: 0.8 V to 5.5 V
- Bias Voltage Range: 2.4 V to 5.5 V
- Adjustable and Fixed Voltage Versions Available
- Output Voltage Range: 0.8 V to 2.1 V (Fixed) and 0.8 V to 3.6 V (Adjustable)
- ±1.5% Accuracy over Temperature, 0.5% V_{OUT} @ 25°C
- Ultra−Low Dropout: Typ. 140 mV at 500 mA
- Very Low Bias Input Current of Typ. 80 μA
- Very Low Bias Input Current in Disable Mode: Typ. 0.5 μA
- Logic Level Enable Input for ON/OFF Control
- Output Active Discharge Option Available
- Stable with a 2.2 μF Ceramic Capacitor
- Available in XDFN6 − 1.2 mm x 1.2 mm x 0.4 mm Package
- These Devices are Pb−Free, Halogen Free/BFR Free and are RoHS Compliant

Typical Applications

- Battery−powered Equipment
- Smartphones, Tablets
- Cameras, DVRs, STB and Camcorders

MARKING DIAGRAM



XX = Specific Device Code
M = Date Code

PIN CONNECTIONS

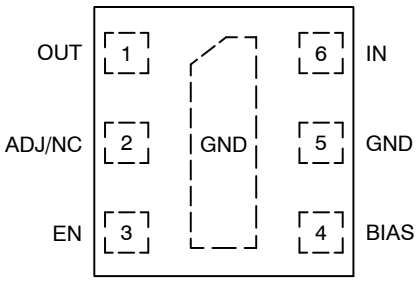

(Top View)

ORDERING INFORMATION

See detailed ordering and shipping information on page 9 of this data sheet.

NOTE: Some of the devices on this data sheet have been **DISCONTINUED**. Please refer to the table on page 9.

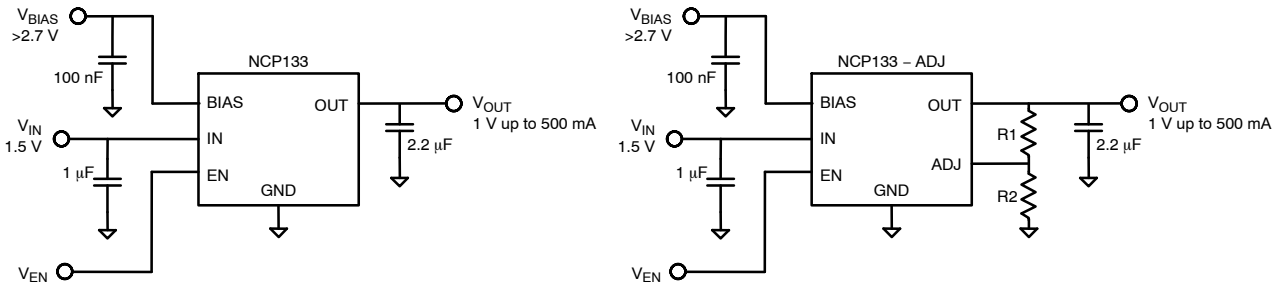

Figure 1. Typical Application Schematics

© Semiconductor Components Industries, LLC, 2015

Downloaded from Arrow.com.

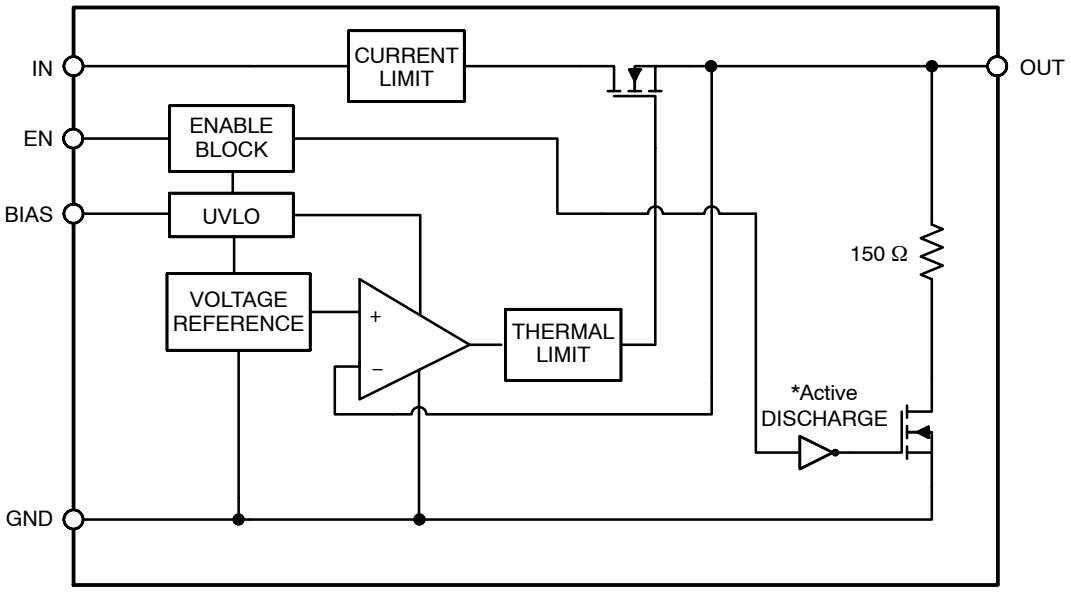

*Active output discharge function is present only in NCP133AMXyyyTCG devices.
yyy denotes the particular output voltage option.

Figure 2. Simplified Schematic Block Diagram – Fixed Version

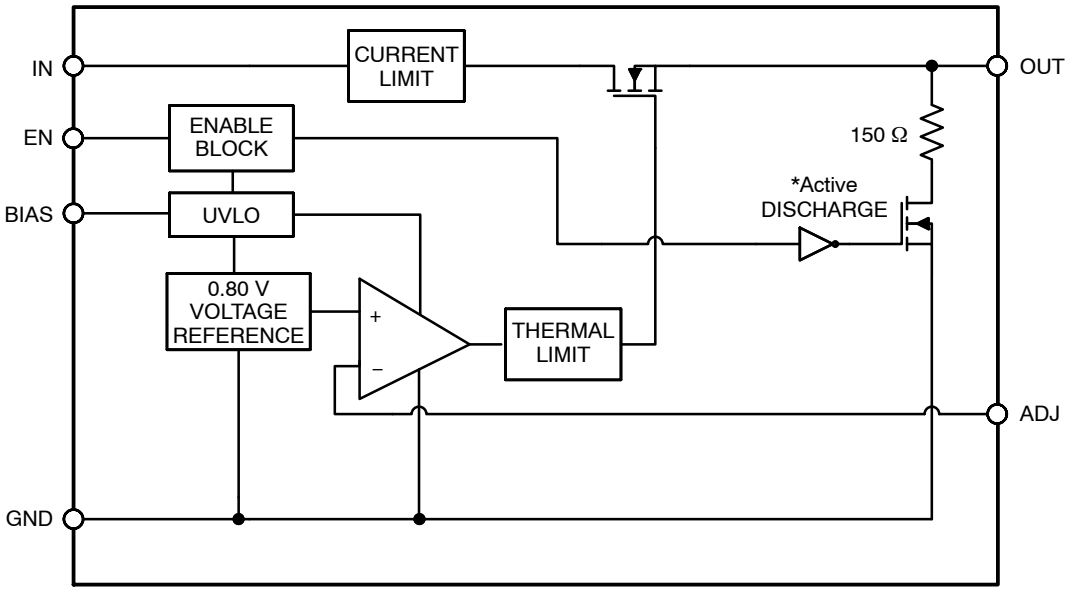

*Active output discharge function is present only in NCP133AMXADJTCG devices.

Figure 3. Simplified Schematic Block Diagram – Adjustable Version

Share Feedback
Your Opinion Matters

Downloaded from Arrow.com.

PIN FUNCTION DESCRIPTION

Pin No. XDFN6	Pin Name	Description
1	OUT	Regulated Output Voltage pin
2 (Fixed)	N/C	Not internally connected (Note 1)
2 (Adj)	ADJ	Adjustable Regulator Feedback Input. Connect to output voltage resistor divider central node.
3	EN	Enable pin. Driving this pin high enables the regulator. Driving this pin low puts the regulator into shutdown mode.
4	BIAS	Bias voltage supply for internal control circuits. This pin is monitored by internal Under-Voltage Lockout Circuit.
5	GND	Ground
6	IN	Input Voltage Supply pin
Pad		Should be soldered to the ground plane for increased thermal performance.

1. True no connect. Printed circuit board traces are allowable

ABSOLUTE MAXIMUM RATINGS

Rating	Symbol	Value	Unit
Input Voltage (Note 2)	V_{IN}	−0.3 to 6	V
Output Voltage	V_{OUT}	−0.3 to (V_{IN}+0.3) ≤ 6	V
Chip Enable, Bias and Adj Input	V_{EN}, V_{BIAS}, V_{ADJ}	−0.3 to 6	V
Output Short Circuit Duration	t_{SC}	unlimited	s
Maximum Junction Temperature	T_J	150	°C
Storage Temperature	T_{STG}	−55 to 150	°C
ESD Capability, Human Body Model (Note 3)	ESD_{HBM}	2000	V
ESD Capability, Machine Model (Note 3)	ESD_{MM}	200	V

Stresses exceeding those listed in the Maximum Ratings table may damage the device. If any of these limits are exceeded, device functionality should not be assumed, damage may occur and reliability may be affected.

2. Refer to ELECTRICAL CHARACTERISTICS and APPLICATION INFORMATION for Safe Operating Area.
3. This device series incorporates ESD protection (except OUT pin) and is tested by the following methods:
   ESD Human Body Model tested per EIA/JESD22−A114
   ESD Machine Model tested per EIA/JESD22−A115
   Latchup Current Maximum Rating tested per JEDEC standard: JESD78.

THERMAL CHARACTERISTICS (Note 4)

Characteristic	Symbol	Value	Unit
Thermal Resistance, Junction−to−Air	R_{thJA}	110	°C/W
Thermal Resistance, Junction−to−Case (top)	R_{thJCt}	167	
Thermal Resistance, Junction−to−Case (bottom)	R_{thJCb}	33	
Thermal Resistance, Junction−to−Board (top)	R_{thJBt}	44	
Thermal Characterization Parameter, Junction−to−Case (top)	Psi_{JCt}	4.8	
Thermal Characterization Parameter, Junction−to−Board [FEM]	Psi_{JB}	42	

4. Measured according to JEDEC board specification (board 2S2P, Cu layer thickness 1 oz, Cu area 1 in^2, no airflow). Detailed description can be found in JESD51−7, MIL−STD−883E, JESD51−8

Share Feedback
Your Opinion Matters

Downloaded from Arrow.com.

ELECTRICAL CHARACTERISTICS $-40°C \le T_J \le 85°C$; V_{BIAS} = 2.7 V or (V_{OUT} + 1.6 V), whichever is greater, $V_{IN} = V_{OUT(NOM)}$ + 0.3 V, I_{OUT} = 1 mA, V_{EN} = 1 V, unless otherwise noted. C_{IN} = 1 μF, C_{OUT} = 2.2 μF. Typical values are at T_J = +25°C. Min/Max values are for $-40°C \le T_J \le 85°C$ unless otherwise noted. (Note 6)

Parameter	Test Conditions	Symbol	Min	Typ	Max	Unit
Operating Input Voltage Range		V_{IN}	V_{OUT} + V_{DO}		5.5	V
Operating Bias Voltage Range		V_{BIAS}	(V_{OUT} + 1.40) ≥ 2.4		5.5	V
Undervoltage Lock−out	V_{BIAS} Rising Hysteresis	UVLO		1.6 0.2		V
Reference Voltage (Adj devices only)	T_J = +25°C	V_{REF}		0.800		V
Output Voltage Accuracy	(Note 5)	V_{OUT}		±0.5		%
Output Voltage Accuracy (Note 5)	$-40°C \le T_J \le 85°C$, $V_{OUT(NOM)}$ + 0.3 V ≤ V_{IN} ≤ $V_{OUT(NOM)}$ + 1.0 V, 2.7 V or ($V_{OUT(NOM)}$ + 1.6 V), whichever is greater < V_{BIAS} < 5.5 V, 1 mA < I_{OUT} < 500 mA	V_{OUT}	−1.5		+1.5	%
V_{IN} Line Regulation	$V_{OUT(NOM)}$ + 0.3 V ≤ V_{IN} ≤ 5.0 V	$Line_{Reg}$		0.01		%/V
V_{BIAS} Line Regulation	2.7 V or ($V_{OUT(NOM)}$ + 1.6 V), whichever is greater < V_{BIAS} < 5.5 V	$Line_{Reg}$		0.01		%/V
Load Regulation	I_{OUT} = 1 mA to 500 mA	$Load_{Reg}$		1.5		mV
V_{IN} Dropout Voltage	I_{OUT} = 150 mA (Note 7)	V_{DO}		37	75	mV
	I_{OUT} = 500 mA (Note 7)	V_{DO}		140	250	
V_{BIAS} Dropout Voltage	I_{OUT} = 500 mA, $V_{IN} = V_{BIAS}$ (Notes 7, 8)	V_{DO}		1.1	1.5	V
Output Current Limit	V_{OUT} = 90% $V_{OUT(NOM)}$	I_{CL}	550	800	1000	mA
ADJ Pin Operating Current (ADJ devices only)		I_{ADJ}		0.1	0.5	μA
Bias Pin Operating Current	V_{BIAS} = 2.7 V	I_{BIAS}		80	110	μA
Bias Pin Disable Current	$V_{EN} \le 0.4$ V	$I_{BIAS(DIS)}$		0.5	1	μA
Vinput Pin Disable Current	$V_{EN} \le 0.4$ V	$I_{VIN(DIS)}$		0.5	1	μA
EN Pin Threshold Voltage	EN Input Voltage “H”	$V_{EN(H)}$	0.9			V
	EN Input Voltage “L”	$V_{EN(L)}$			0.4	
EN Pull Down Current	V_{EN} = 5.5 V	I_{EN}		0.3	1	μA
Turn−On Time	From assertion of V_{EN} to V_{OUT} = 98% $V_{OUT(NOM)}$. $V_{OUT(NOM)}$ = 1.0 V	t_{ON}		150		μs
Power Supply Rejection Ratio	V_{IN} to V_{OUT}, f = 1 kHz, I_{OUT} = 150 mA, $V_{IN} \ge V_{OUT}$ +0.5 V	PSRR(V_{IN})		70		dB
	V_{BIAS} to V_{OUT}, f = 1 kHz, I_{OUT} = 150 mA, $V_{IN} \ge V_{OUT}$ +0.5 V	PSRR(V_{BIAS})		80		dB
Output Noise Voltage (Fixed Volt.)	$V_{IN} = V_{OUT}$ +0.5 V, $V_{OUT(NOM)}$ = 1 V, f = 10 Hz to 100 kHz	V_N		40		μV_{RMS}
Output Noise Voltage (Adj devices)	$V_{IN} = V_{OUT}$ +0.5 V, f = 10 Hz to 100 kHz	V_N		50 x V_{OUT}		μV_{RMS}
Thermal Shutdown Threshold	Temperature increasing			160		°C
	Temperature decreasing			140		
Output Discharge Pull−Down	$V_{EN} \le 0.4$ V, V_{OUT} = 0.5 V, NCP133A options only	R_{DISCH}		150		Ω

Product parametric performance is indicated in the Electrical Characteristics for the listed test conditions, unless otherwise noted. Product performance may not be indicated by the Electrical Characteristics if operated under different conditions.

5. Adjustable devices tested at 0.8 V; external resistor tolerance is not taken into account.
6. Performance guaranteed over the indicated operating temperature range by design and/or characterization. Production tested at T_A = 25°C. Low duty cycle pulse techniques are used during the testing to maintain the junction temperature as close to ambient as possible.
7. Dropout voltage is characterized when V_{OUT} falls 3% below $V_{OUT(NOM)}$.
8. For output voltages below 0.9 V, V_{BIAS} dropout voltage does not apply due to a minimum Bias operating voltage of 2.4 V.

Share Feedback
Your Opinion Matters

Downloaded from Arrow.com.

TYPICAL CHARACTERISTICS

AT T_J = +25°C, V_{IN} = $V_{OUT(TYP)}$ + 0.3 V, V_{BIAS} = 2.7 V, V_{EN} = V_{BIAS}, $V_{OUT(NOM)}$ = 1.0 V, I_{OUT} = 500 MA, C_{IN} = 1 MF, C_{BIAS} = 0.1 MF, AND C_{OUT} = 2.2 MF (EFFECTIVE CAPACITANCE), UNLESS OTHERWISE NOTED.

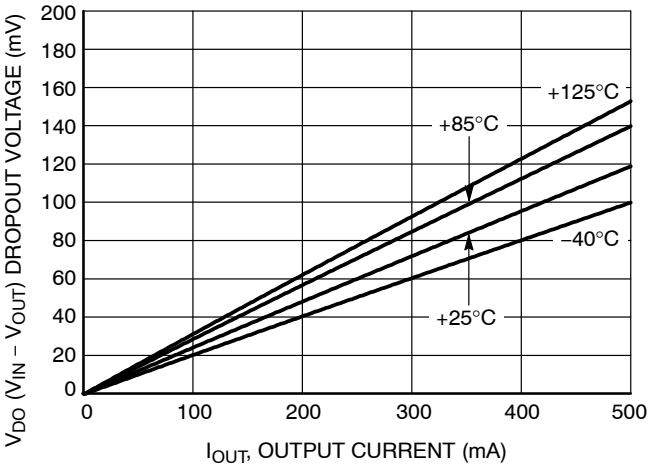

Figure 4. V_{IN} Dropout Voltage vs. I_{OUT} and Temperature T_J

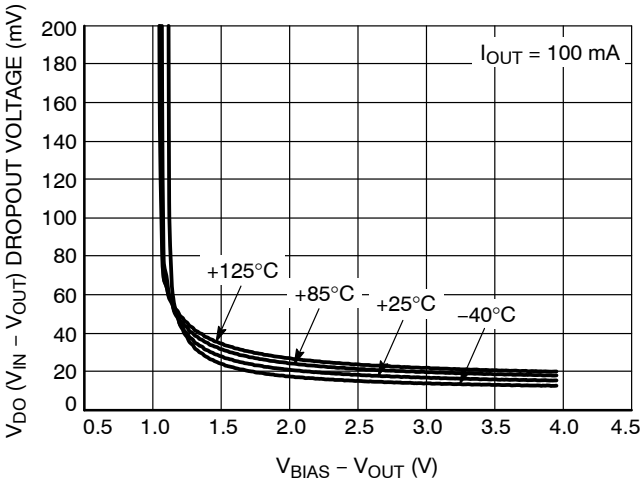

Figure 5. V_{IN} Dropout Voltage vs. (V_{BIAS} – V_{OUT}) and Temperature T_J

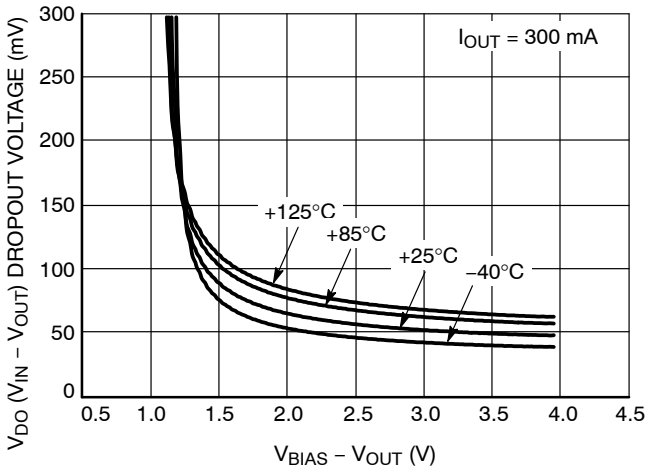

Figure 6. V_{IN} Dropout Voltage vs. (V_{BIAS} – V_{OUT}) and Temperature T_J

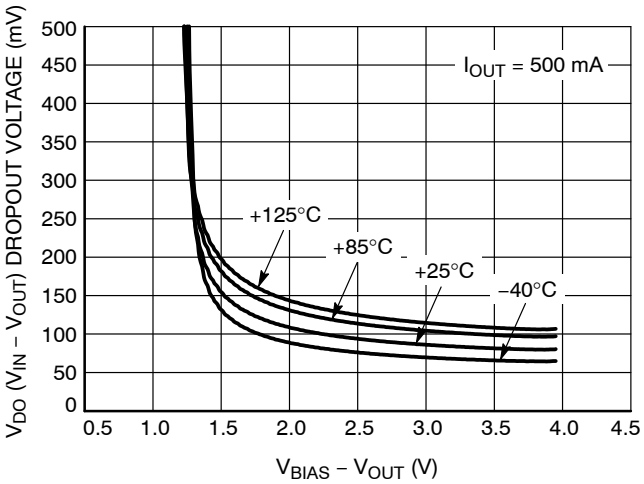

Figure 7. V_{IN} Dropout Voltage vs. (V_{BIAS} – V_{OUT}) and Temperature T_J

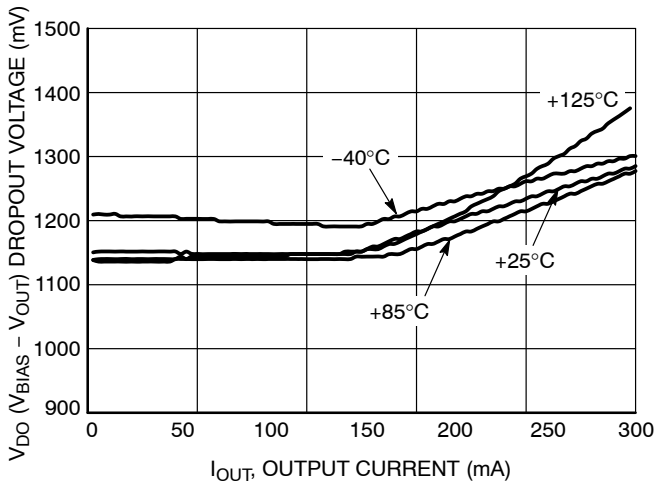

Figure 8. V_{BIAS} Dropout Voltage vs. I_{OUT} and Temperature T_J

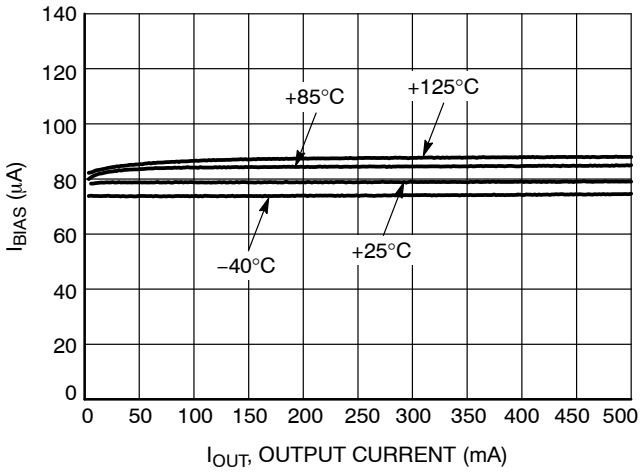

Figure 9. BIAS Pin Current vs. I_{OUT} and Temperature T_J

Share Feedback
Your Opinion Matters

Downloaded from Arrow.com.

TYPICAL CHARACTERISTICS (continued)

AT T_J = +25°C, V_{IN} = $V_{OUT(TYP)}$ + 0.3 V, V_{BIAS} = 2.7 V, V_{EN} = V_{BIAS}, $V_{OUT(NOM)}$ = 1.0 V, I_{OUT} = 500 MA, C_{IN} = 1 MF, C_{BIAS} = 0.1 MF, AND C_{OUT} = 2.2 MF (EFFECTIVE CAPACITANCE), UNLESS OTHERWISE NOTED.

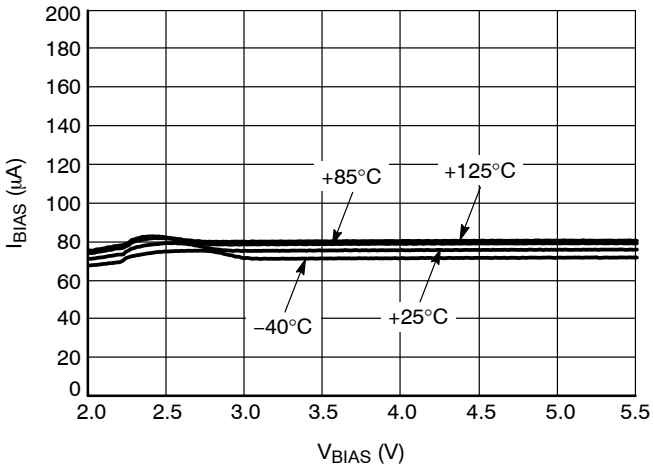

Figure 10. BIAS Pin Current vs. V_{BIAS} and Temperature T_J

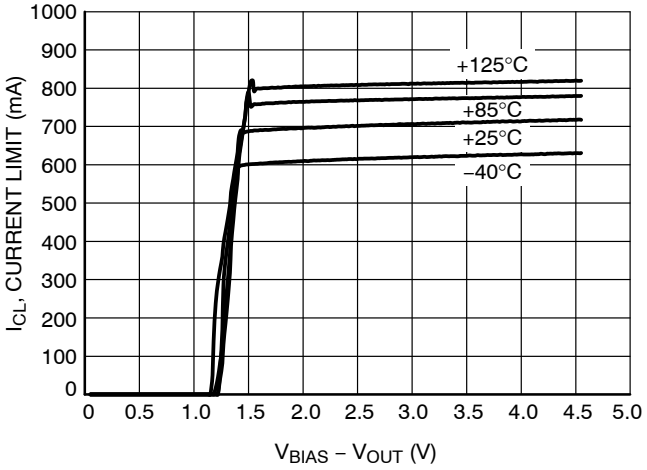

Figure 11. Current Limit vs. (V_{BIAS} − V_{OUT})

Share Feedback
Your Opinion Matters

Downloaded from Arrow.com.

APPLICATIONS INFORMATION

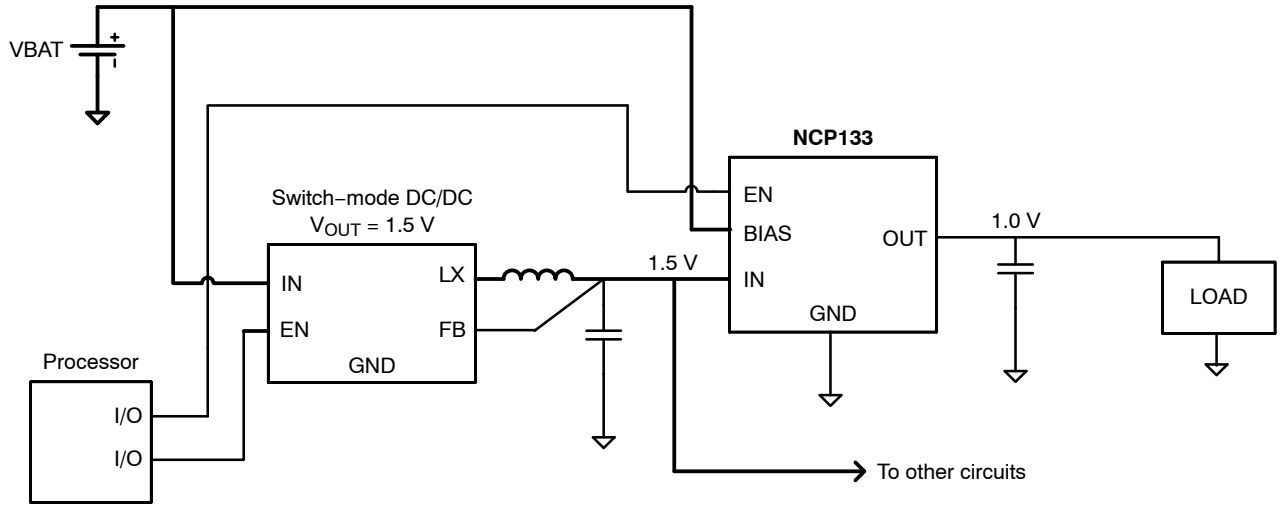

Figure 12. Typical Application: Low−Voltage DC/DC Post−Regulator with ON/OFF Functionality

The NCP133 dual−rail very low dropout voltage regulator is using NMOS pass transistor for output voltage regulation from V_{IN} voltage. All the low current internal control circuitry is powered from the V_{BIAS} voltage.

The use of an NMOS pass transistor offers several advantages in applications. Unlike PMOS topology devices, the output capacitor has reduced impact on loop stability. Vin to Vout operating voltage difference can be very low compared with standard PMOS regulators in very low Vin applications.

The NCP133 offers smooth monotonic start-up. The controlled voltage rising limits the inrush current.

The Enable (EN) input is equipped with internal hysteresis. NCP133 Voltage linear regulator Fixed and Adjustable version is available.

Output Voltage Adjust

The required output voltage of Adjustable devices can be adjusted from 0.8 V to 3.6 V using two external resistors.

Typical application schematics is shown in Figure 13.

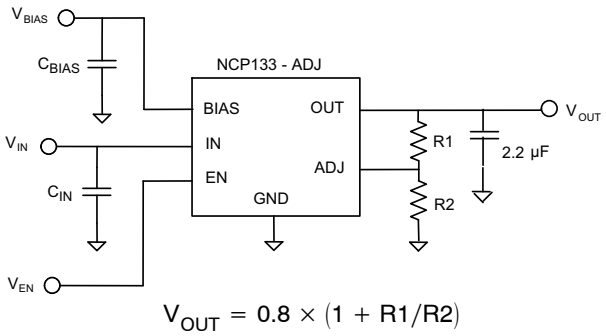

$$V_{OUT} = 0.8 \times (1 + R1/R2)$$

Figure 13. Typical Application Schematics

It is recommended to keep the total serial resistance of resistors (R1 + R2) no greater than 100 kΩ.

Recommended resistor values for programming the frequently used voltages can be found in the Table 1.

Dropout Voltage

Because of two power supply inputs V_{IN} and V_{BIAS} and one V_{OUT} regulator output, there are two Dropout voltages specified.

The first, the V_{IN} Dropout voltage is the voltage difference ($V_{IN} – V_{OUT}$) when V_{OUT} starts to decrease by percent specified in the Electrical Characteristics table. V_{BIAS} is high enough; specific value is published in the Electrical Characteristics table.

The second, V_{BIAS} dropout voltage is the voltage difference ($V_{BIAS} – V_{OUT}$) when V_{IN} and V_{BIAS} pins are joined together and V_{OUT} starts to decrease.

Input and Output Capacitors

The device is designed to be stable for ceramic output capacitors with Effective capacitance in the range from 2.2 µF to 10 µF. The device is also stable with multiple capacitors in parallel, having the total effective capacitance in the specified range.

In applications where no low input supplies impedance available (PCB inductance in V_{IN} and/or V_{BIAS} inputs as example), the recommended C_{IN} = 1 µF and C_{BIAS} = 0.1 µF or greater. Ceramic capacitors are recommended**.** For the best performance all the capacitors should be connected to the NCP133 respective pins directly in the device PCB copper layer, not through vias having not negligible impedance.

When using small ceramic capacitor, their capacitance is not constant but varies with applied DC biasing voltage, temperature and tolerance. The effective capacitance can be much lower than their nominal capacitance value, most importantly in negative temperatures and higher LDO output voltages. That is why the recommended Output capacitor capacitance value is specified as Effective value in the specific application conditions.

Share Feedback
Your Opinion Matters

Downloaded from Arrow.com.

Enable Operation

The enable pin will turn the regulator on or off. The threshold limits are covered in the electrical characteristics table in this data sheet. If the enable function is not to be used then the pin should be connected to V_{IN} or V_{BIAS}.

Current Limitation

The internal Current Limitation circuitry allows the device to supply the full nominal current and surges but protects the device against Current Overload or Short.

Thermal Protection

Internal thermal shutdown (TSD) circuitry is provided to protect the integrated circuit in the event that the maximum junction temperature is exceeded. When TSD activated , the regulator output turns off. When cooling down under the low temperature threshold, device output is activated again. This TSD feature is provided to prevent failures from accidental overheating.

Activation of the thermal protection circuit indicates excessive power dissipation or inadequate heatsinking. For reliable operation, junction temperature should be limited to +125°C maximum.

Table 1. RESISTOR VALUES FOR PROGRAMMING THE OUTPUT VOLTAGE

V_{OUT} (V)	R_1 (kΩ)	R_2 (kΩ)
0.8	Short	Open
0.9	10.0	80.6
1.0	19.6	78.7
1.05	24.3	78.7
1.1	24.9	66.5
1.2	33.2	66.5
1.5	43.2	49.9
1.8	41.2	33.2
2.5	42.2	20.0
3.3	61.9	20.0

NOTE: $V_{OUT} = 0.8 \times (1 + R_1/R_2)$
Resistors in the table are standard 1% types

Share Feedback
Your Opinion Matters

Downloaded from Arrow.com.

ORDERING INFORMATION

Device	Nominal Output Voltage	Marking	Marking Rotation	Option	Package	Shipping†
NCP133AMX090TCG	0.90 V	D	90°	Output Active Discharge	XDFN6 (Pb−Free)	3000 or 5000 / Tape & Reel (Note 9)
NCP133AMX105TCG	1.05 V	4	0°	Output Active Discharge	XDFN6 (Pb−Free)	3000 or 5000 / Tape & Reel (Note 9)
NCP133AMX115TCG	1.15 V	T	90°	Output Active Discharge	XDFN6 (Pb−Free)	3000 or 5000 / Tape & Reel (Note 9)
NCP133AMX120TCG	1.20 V	6	0°	Output Active Discharge	XDFN6 (Pb−Free)	3000 or 5000 / Tape & Reel (Note 9)
NCP133AMX125TCG	1.25 V	E	90°	Output Active Discharge	XDFN6 (Pb−Free)	3000 or 5000 / Tape & Reel (Note 9)
NCP133AMXADJTCG	ADJ	K	90°	Output Active Discharge	XDFN6 (Pb−Free)	3000 or 5000 / Tape & Reel (Note 9)

DISCONTINUED (Note 10)

NCP133AMX090TAG	0.90 V	D	90°	Output Active Discharge	XDFN6 (Pb−Free)	3000 or 5000 / Tape & Reel (Note 9)
NCP133AMX100TCG	1.00 V	3	0°	Output Active Discharge	XDFN6 (Pb−Free)	3000 / Tape & Reel
NCP133AMX110TCG	1.10 V	5	0°	Output Active Discharge	XDFN6 (Pb−Free)	3000 / Tape & Reel
NCP133AMX130TCG	1.30 V	F	90°	Output Active Discharge	XDFN6 (Pb−Free)	3000 / Tape & Reel
NCP133AMX150TCG	1.50 V	J	90°	Output Active Discharge	XDFN6 (Pb−Free)	3000 / Tape & Reel
NCP133AMX180TCG	1.80 V	Q	90°	Output Active Discharge	XDFN6 (Pb−Free)	3000 / Tape & Reel
NCP133BMXADJTCG	ADJ	P	90°	Non−Active Discharge	XDFN6 (Pb−Free)	3000 / Tape & Reel

†For information on tape and reel specifications, including part orientation and tape sizes, please refer to our Tape and Reel Packaging Specifications Brochure, BRD8011/D.

To order other package and voltage variants, please contact your **onsemi** sales representative

9. Product processed after October 1, 2022 are shipped with quantity 5000 units / Tape & Reel.
10. **DISCONTINUED:** These devices are not recommended for new design. Please contact your **onsemi** representative for information. The most current information on these devices may be available on www.onsemi.com.

Share Feedback
Your Opinion Matters

Downloaded from Arrow.com.



SCALE 4:1

XDFN6 1.20x1.20, 0.40P
CASE 711AT
ISSUE C

DATE 04 DEC 2015

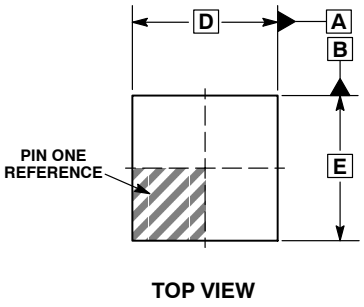

TOP VIEW

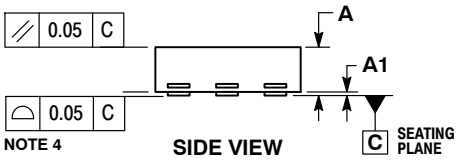

SIDE VIEW

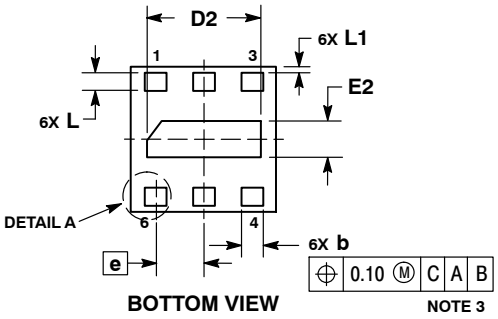

BOTTOM VIEW

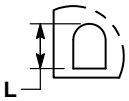

DETAIL A
OPTIONAL CONSTRUCTION

NOTES:
1. DIMENSIONING AND TOLERANCING PER ASME Y14.5M, 1994.
2. CONTROLLING DIMENSION: MILLIMETERS.
3. DIMENSION b APPLIES TO THE PLATED TERMINALS.
4. COPLANARITY APPLIES TO THE PAD AS WELL AS THE TERMINALS.

	MILLIMETERS		
DIM	MIN	TYP	MAX
A	0.30	0.37	0.45
A1	0.00	0.03	0.05
b	0.13	0.18	0.23
D	1.15	1.20	1.25
D2	0.84	0.94	1.04
E	1.15	1.20	1.25
E2	0.20	0.30	0.40
e	0.40 BSC		
L	0.15	0.20	0.25
L1	0.00	0.05	0.10

GENERIC MARKING DIAGRAM*



XX = Specific Device Code
M = Date Code

*This information is generic. Please refer to device data sheet for actual part marking. Pb−Free indicator, “G” or microdot “ ▪”, may or may not be present.

RECOMMENDED MOUNTING FOOTPRINT*

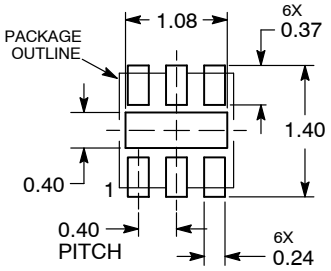

DIMENSIONS: MILLIMETERS

*For additional information on our Pb−Free strategy and soldering details, please download the **onsemi** Soldering and Mounting Techniques Reference Manual, SOLDERRM/D.

DOCUMENT NUMBER:	**98AON76141F**	Electronic versions are uncontrolled except when accessed directly from the Document Repository. Printed versions are uncontrolled except when stamped “CONTROLLED COPY” in red.	
DESCRIPTION:	**XDFN6, 1.20 X 1.20, 0.40P**		**PAGE 1 OF 1**

onsemi and onsemi are trademarks of Semiconductor Components Industries, LLC dba **onsemi** or its subsidiaries in the United States and/or other countries. **onsemi** reserves the right to make changes without further notice to any products herein. **onsemi** makes no warranty, representation or guarantee regarding the suitability of its products for any particular purpose, nor does **onsemi** assume any liability arising out of the application or use of any product or circuit, and specifically disclaims any and all liability, including without limitation special, consequential or incidental damages. **onsemi** does not convey any license under its patent rights nor the rights of others.

© Semiconductor Components Industries, LLC, 2013

Downloaded from Arrow.com.

onsemi, ONSEMI , and other names, marks, and brands are registered and/or common law trademarks of Semiconductor Components Industries, LLC dba "**onsemi**" or its affiliates and/or subsidiaries in the United States and/or other countries. **onsemi** owns the rights to a number of patents, trademarks, copyrights, trade secrets, and other intellectual property. A listing of **onsemi**'s product/patent coverage may be accessed at www.onsemi.com/site/pdf/Patent−Marking.pdf. **onsemi** reserves the right to make changes at any time to any products or information herein, without notice. The information herein is provided "as−is" and **onsemi** makes no warranty, representation or guarantee regarding the accuracy of the information, product features, availability, functionality, or suitability of its products for any particular purpose, nor does **onsemi** assume any liability arising out of the application or use of any product or circuit, and specifically disclaims any and all liability, including without limitation special, consequential or incidental damages. Buyer is responsible for its products and applications using **onsemi** products, including compliance with all laws, regulations and safety requirements or standards, regardless of any support or applications information provided by **onsemi**. "Typical" parameters which may be provided in **onsemi** data sheets and/or specifications can and do vary in different applications and actual performance may vary over time. All operating parameters, including "Typicals" must be validated for each customer application by customer's technical experts. **onsemi** does not convey any license under any of its intellectual property rights nor the rights of others. **onsemi** products are not designed, intended, or authorized for use as a critical component in life support systems or any FDA Class 3 medical devices or medical devices with a same or similar classification in a foreign jurisdiction or any devices intended for implantation in the human body. Should Buyer purchase or use **onsemi** products for any such unintended or unauthorized application, Buyer shall indemnify and hold **onsemi** and its officers, employees, subsidiaries, affiliates, and distributors harmless against all claims, costs, damages, and expenses, and reasonable attorney fees arising out of, directly or indirectly, any claim of personal injury or death associated with such unintended or unauthorized use, even if such claim alleges that **onsemi** was negligent regarding the design or manufacture of the part. **onsemi** is an Equal Opportunity/Affirmative Action Employer. This literature is subject to all applicable copyright laws and is not for resale in any manner.

ADDITIONAL INFORMATION

TECHNICAL PUBLICATIONS:
Technical Library: www.onsemi.com/design/resources/technical−documentation
onsemi Website: www.onsemi.com

ONLINE SUPPORT: www.onsemi.com/support
For additional information, please contact your local Sales Representative at www.onsemi.com/support/sales

◊

Downloaded from Arrow.com.