Overview

The KEMET T490, designed for customer product applications (low temperature demanding applications), meets RoHS compliance with leads constructed of 100% matte tin and a green molding compound. The T490 is classified as MSL (Moisture Sensitivity Level) 1 under J STD 020: unlimited floor lifetime at ≤ 30°C/85% RH. Tin/lead (Sn/Pb) terminations are available upon request for any part number. Gold-plated terminations are also available for use with conductive epoxy attachment processes. Standard packaging of these devices is Tape & Reel in accordance with EIA 481. This system provides perfect compatibility with all tape-fed placement units.

Benefits

- Tape & Reel standard packaging per EIA 481
- Symmetrical compliant terminations
- Optional gold-plated terminations
- Laser-marked case
- Suitable for 3 x 260°C reflow passes
- Halogen-free epoxy
- Capacitance values of 47 – 470 µF
- Tolerance of ±20%
- Voltage rating of 4 – 10 VDC
- 0.2% per 1,000 hours at 85°C 0.5 V_R Reliability
- Small and low profile case sizes
- RoHS Compliant and lead-free terminations
- MSL Reflow Temp ≤ 260°C = 1
- Operating temperature range of −55°C to +125°C

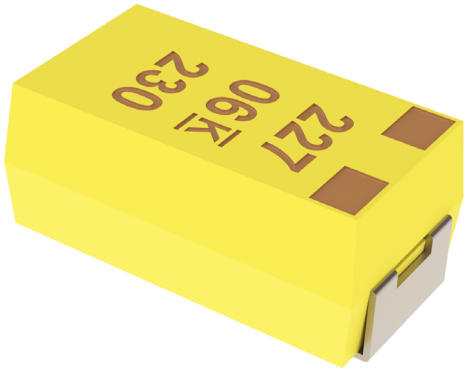

Applications

Typical applications include decoupling and filtering in communications end applications such as cellphones and consumer mobile.

Environmental Compliance

RoHS compliant when ordered with 100% Sn solder.
- Halogen-free
- Epoxy compliant with UL94 V–0
- Molded Epoxy complies for outgassing testing under ASTM E 595.

Downloaded from Arrow.com.

K-SIM

For a detailed analysis of specific part numbers, please visit ksim.kemet.com to access KEMET's K-SIM software. KEMET K-SIM is designed to simulate behavior of components with respect to frequency, ambient temperature, and DC bias levels.

Ordering Information

T	490	B	227	M	006	A	T	
Capacitor Class	Series	Case Size	Capacitance Code (pF)	Capacitance Tolerance	Rated Voltage (VDC)	Failure Rate/ Design	Termination Finish	Packaging (C-Spec)
T = Tantalum	Industrial	A B T	First two digits represent significant figures. Third digit specifies number of zeros.	M = ±20%	004 = 4 006 = 6 010 = 10	A = N/A	T = 100% Matte Tin (Sn) plated H = Standard solder coated (SnPb 5% Pb minimum) G = Gold-plated (A, B only)	Blank = 7" Reel 7280 = 13" Reel

Performance Characteristics

Item	Performance Characteristics
Operating Temperature	−55°C to 125°C
Rated Capacitance Range	47 – 470 µF at 120 Hz/25°C
Capacitance Tolerance	M Tolerance (20%)
Rated Voltage Range	4 – 10 V
ESR (100 kHz)	Refer to Part Number Electrical Specification Table
Leakage Current	≤ 0.01 CV (µA) at rated voltage after 5 minutes

Downloaded from Arrow.com.

Qualification

Test	Condition		Characteristics			
Endurance	40°C at 1.0 V_R 85°C at 1/2 V_R and 125°C at 1/5 rated voltage, 1,000 hours		Δ C/C	Within +10%/−20% of initial value		
			DCL	Within 2 x initial limit		
			ESR	Within 2.5 x initial limits		
Storage Life	85°C at 0 volts, 1,000 hours		Δ C/C	Within +10%/−20% of initial value		
			DCL	Within 1.25 x initial limit		
			ESR	Within initial limits		
Humidity	40°C, 93% RH, 1,000 hours, no load		Δ C/C	Within −5%/+35% of initial value		
			DCL	Within 2.0 x initial limit		
Temperature Stability	Extreme temperature exposure at a succession of continuous steps at +25°C, −55°C, +25°C, +85°C, +125°C, +25°C		+25°C	−55°C	+85°C	+125°C
		Δ C/C	IL*	±10%	±20%	±30%
		DCL	IL	N/A	10 x IL	15 x IL
Surge Voltage	40°C, 1.32 x rated voltage 1,000 cycles		Δ C/C	Within +10%/−20% of initial value		
			DCL	Within 2.0 x initial limits		
			ESR	Within 1.25 x initial limits		

**IL = Initial limit*

Downloaded from Arrow.com.

Electrical Characteristics

ESR vs. Frequency

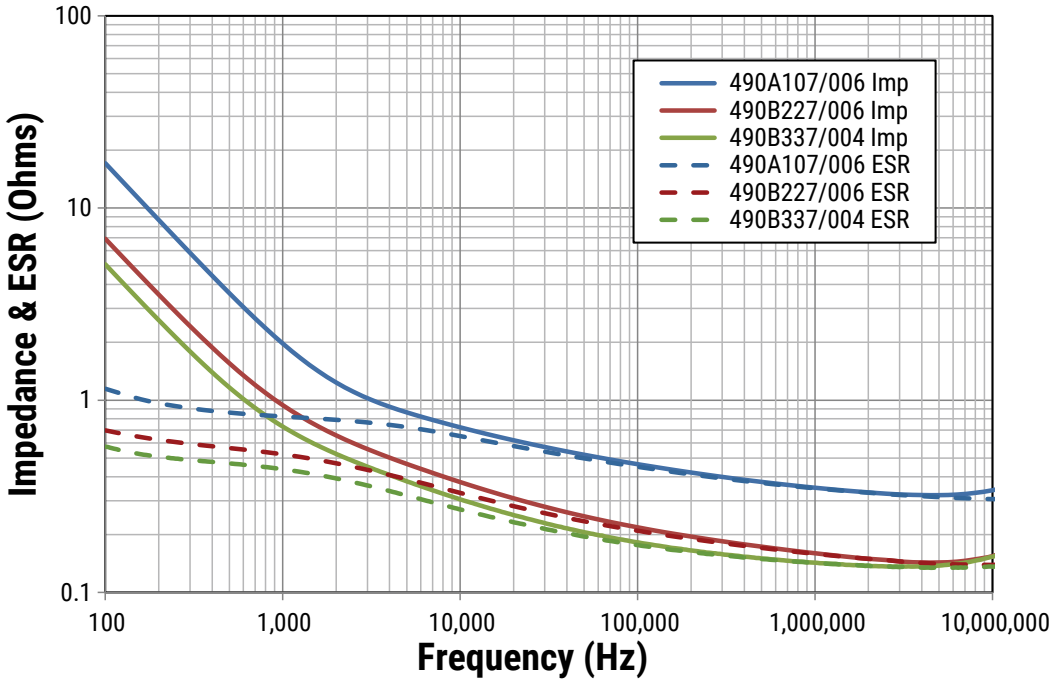

Capacitance vs. Frequency

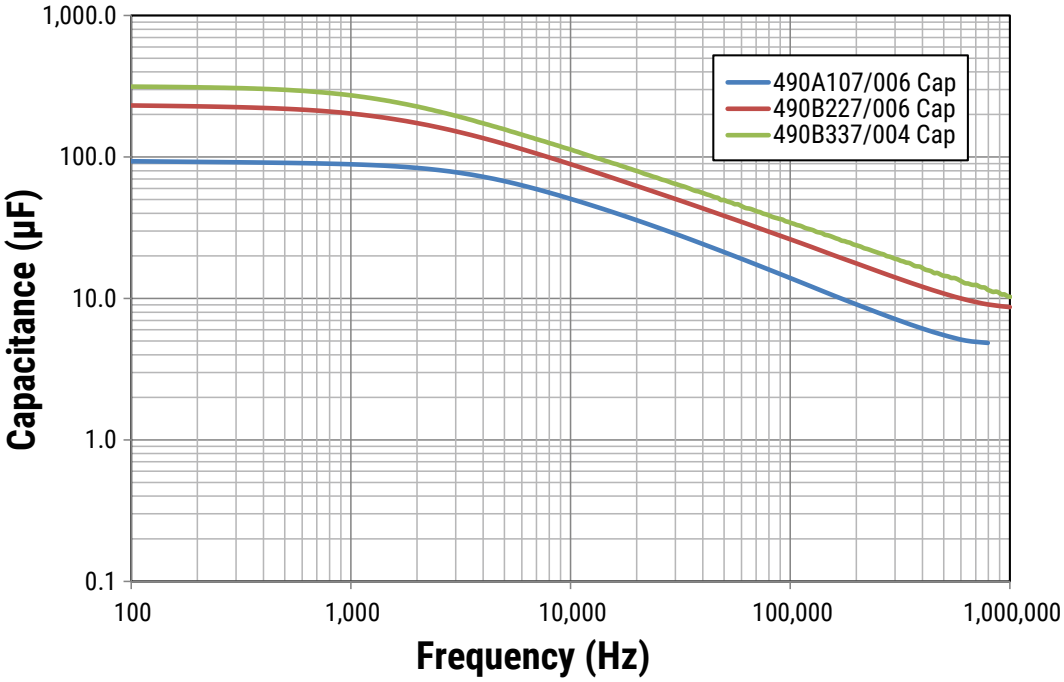

Downloaded from Arrow.com.

Dimensions – Millimeters (Inches)

Metric will govern

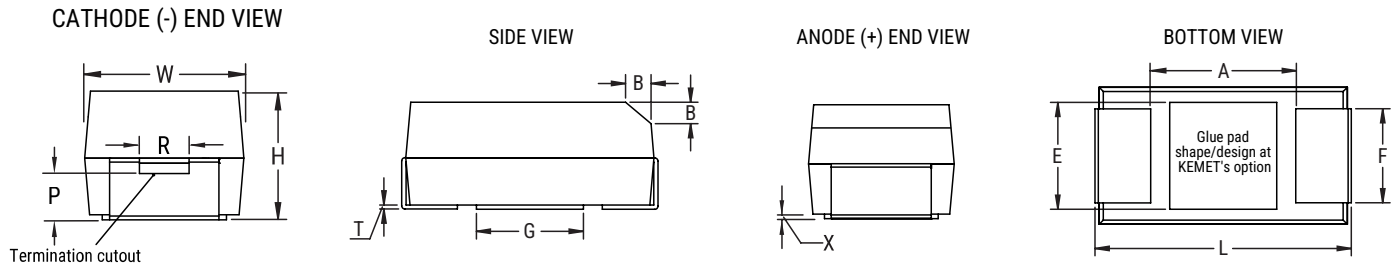

Case Size		Component												
KEMET	EIA	L	W	H	F ±0.1 ±(.004)	S	B ±0.15 (Ref) ±.006	X (Ref)	P (Ref)	R (Ref)	T (Ref)	A (Min)	G (Ref)	E (Ref)
A	3216–18	3.2 ±0.2 (0.126 ±0.008)	1.6 ±0.2 (0.063 ±0.008)	1.6 ±0.2 (0.063 ±0.008)	1.2 (0.047)	0.80 (0.032) +0.2 (0.008)/−0.3 (0.011)	0.4 (.016)	0.10 ±0.10 (0.004 ±0.004)	0.4 (0.016)	0.4 (0.016)	0.13 (0.005)	1.2 (0.047)	1.1 (0.043)	1.3 (0.051)
B	3528–21	3.5 ±0.2 (0.138 ±0.008)	2.8 ±0.2 (0.110 ±0.008)	1.9 ±0.2 (0.075 ±0.008)	2.2 (0.087)	0.80 (0.032) +0.2 (0.008)/−0.3 (0.011)	0.4 (.016)	0.10 ±0.10 (0.004 ±0.004)	0.5 (0.020)	1.0 (0.039)	0.13 (0.005)	1.9 (0.075)	1.8 (0.071)	2.2 (0.087)
T	3528–12	3.5 ±0.2 (0.138 ±0.008)	2.8 ±0.2 (0.110 ±0.008)	1.1 ±0.1 (0.043 ±0.004)	2.2 (0.087)	0.80 (0.032) +0.2 (0.008)/−0.3 (0.011)	N/A	0.05 (0.002)	N/A	N/A	0.13 (0.005)	1.9 (0.075)	1.8 (0.071)	2.2 (0.087)

Notes: (Ref) – Dimensions provided for reference only. For low profile cases, no dimensions are provided for B, P, or R because these cases do not have a bevel or a notch.

Downloaded from Arrow.com.

Table 1 – Ratings & Part Number Reference

Rated Voltage	Rated Capacitance	Case Code/ Case Size	KEMET Part Number	DC Leakage	ESR	Maximum Allowable Ripple Current	Maximum Operating Temp	MSL
VDC at 40°C	µF	KEMET/EIA	(See below for part options)	µA at +25°C Maximum/ 5 Minutes	Ω at +25°C 100 kHz Maximum	mA at +25°C 100 kHz	°C	Reflow Temp ≤ 260°C
4	100	A/3216-18	T490A107M004A(1)E500	4.0	0.5	387	125	1
4	150	A/3216-18	T490A157M004A(1)E800	6.0	0.8	306	125	1
4	150	T/3528-12	T490T157M004A(1)E1K1	6.0	1.1	252	125	1
4	220	B/3528-21	T490B227M004A(1)E500	8.8	0.5	412	125	1
4	330	B/3528-21	T490B337M004A(1)E800	13.2	0.8	326	125	1
4	470	B/3528-21	T490B477M004A(1)E1K0	18.8	1.0	291	125	1
6	47	T/3528-12	T490T476M006A(1)E800	2.8	0.8	295	125	1
6	68	A/3216-18	T490A686M006A(1)E1K0	4.1	1.0	274	125	1
6	68	T/3528-12	T490T686M006A(1)E600	4.1	0.6	342	125	1
6	100	A/3216-18	T490A107M006A(1)E500	6.0	0.5	387	125	1
6	100	A/3216-18	T490A107M006A(1)E800	6.0	0.8	306	125	1
6	100	T/3528-12	T490T107M006A(1)E1K0	6.0	1.0	265	125	1
6	150	B/3528-21	T490B157M006A(1)E500	9.0	0.5	412	125	1
6	150	B/3528-21	T490B157M006A(1)E800	9.0	0.8	326	125	1
6	220	B/3528-21	T490B227M006A(1)E300	13.2	0.3	532	125	1
6	220	B/3528-21	T490B227M006A(1)E500	13.2	0.5	412	125	1
6	330	B/3528-21	T490B337M006A(1)E800	19.8	0.8	326	125	1
10	47	T/3528-12	T490T476M010A(1)E1K0	4.7	1.0	265	125	1
10	47	A/3216-18	T490A476M010A(1)E1K0	4.7	1.0	274	125	1
10	47	A/3216-18	T490A476M010A(1)E1K2	4.7	1.2	250	125	1
10	150	B/3528-21	T490B157M010A(1)E500	15.0	0.5	412	125	1
10	150	B/3528-21	T490B157M010A(1)E800	15.0	0.8	326	125	1
10	220	B/3528-21	T490B227M010A(1)E800	22.0	0.8	326	125	1
VDC at 40°C	µF	KEMET/EIA	(See below for part options)	µA at +25°C Maximum/ 5 Minutes	Ω at +25°C 100 kHz Maximum	mA at +25°C 100 kHz	°C	Reflow Temp ≤ 260°C
Rated Voltage	Rated Capacitance	Case Code/ Case Size	KEMET Part Number	DC Leakage	ESR	Maximum Allowable Ripple Current	Maximum Operating Temp	MSL

(1) To complete KEMET part number, insert T = 100% Matte Tin (Sn) Plated, G = Gold-plated, H = Standard solder coated (SnPb 5% Pb minimum). Designates termination finish.

Blue color text denotes "Under Development."

Refer to Ordering Information for additional detail.

The ESR value may increase up to 1.5 x Initial Limit post mounting.

The DCL value may increase up to 2.0 x Initial Limit post mounting.

Higher voltage ratings and tighter tolerance product including ESR may be substituted within the same size at KEMET's option. Voltage substitution will be marked with the higher voltage rating. Substitutions can include better than series.

Downloaded from Arrow.com.

Recommended Voltage Derating Guidelines

	−55°C to 40°C	40°C to 85°C	85°C to 125°C
% Change in Working DC Voltage with Temperature	100% of V_r	50% of V_r	20% of V_r
Recommended Maximum Application Voltage	50% of V_r	25% of V_r	10% of V_r

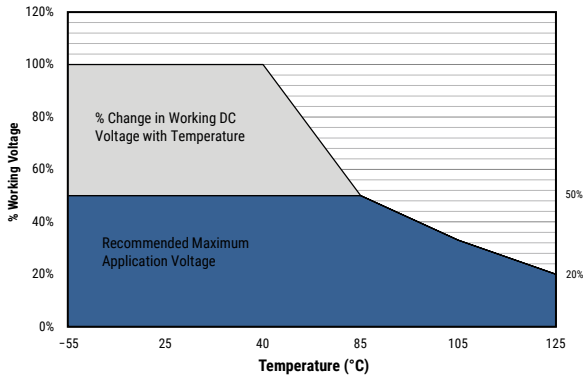

Ripple Current/Ripple Voltage

Permissible AC ripple voltage and current are related to equivalent series resistance (ESR) and the power dissipation capabilities of the device. Permissible AC ripple voltage which may be applied is limited by two criteria:

1. The positive peak AC voltage plus the DC bias voltage, if any, must not exceed the DC voltage rating of the capacitor.
2. The negative peak AC voltage in combination with bias voltage, if any, must not exceed the allowable limits specified for the reverse voltage. See the Reverse Voltage section for allowable limits.

The maximum power dissipation by case size can be determined using the table at right. The maximum power dissipation rating stated in the table must be reduced with increasing environmental operating temperatures. Refer to the table below for temperature compensation requirements.

Temperature Compensation Multipliers for Maximum Ripple Current		
T ≤ 25°C	T ≤ 40°C	T ≤ 125°C
1.00	0.90	0.40

T = Environmental Temperature

The maximum power dissipation rating must be reduced with increasing environmental operating temperatures. Refer to the Temperature Compensation Multiplier table for details.

KEMET Case Code	EIA Case Code	Maximum Power Dissipation (P max) mWatts at 25°C w/+20°C Rise
A	3216–18	75
B	3528–21	85
T	3528–12	70

Using the P max of the device, the maximum allowable rms ripple current or voltage may be determined.

$I(max) = \sqrt{P\ max/R}$
$E(max) = Z\sqrt{P\ max/R}$

I = rms ripple current (amperes)
E = rms ripple voltage (volts)
P max = maximum power dissipation (watts)
R = ESR at specified frequency (ohms)
Z = Impedance at specified frequency (ohms)

Downloaded from Arrow.com.

Reverse Voltage

Solid tantalum capacitors are polar devices and may be permanently damaged or destroyed if connected with the wrong polarity. The positive terminal is identified on the capacitor body by a stripe, plus, in some cases a beveled edge. A small degree of transient reverse voltage is permissible for short periods per the table. The capacitors should not be operated continuously in reverse mode, even within these limits.

Temperature	Permissible Transient Reverse Voltage
25°C	15% of Rated Voltage
40°C	5% of Rated Voltage
85°C	1% of Rated Voltage

Table 2 – Land Dimensions/Courtyard

KEMET	Metric Size Code	Density Level A: Maximum (Most) Land Protrusion (mm)					Density Level B: Median (Nominal) Land Protrusion (mm)					Density Level C: Minimum (Least) Land Protrusion (mm)				
Case	EIA	W	L	S	V1	V2	W	L	S	V1	V2	W	L	S	V1	V2
A	3216–18	1.35	2.20	0.62	6.02	2.80	1.23	1.80	0.82	4.92	2.30	1.13	1.42	0.98	4.06	2.04
B	3528–21	2.35	2.21	0.92	6.32	4.00	2.23	1.80	1.12	5.22	3.50	2.13	1.42	1.28	4.36	3.24
T	3528–12	2.35	2.20	0.92	6.32	4.00	2.23	1.80	1.12	5.22	3.50	2.13	1.42	1.28	4.36	3.24

Density Level A: *For low-density product applications. Recommended for wave solder applications and provides a wider process window for reflow solder processes.*
Density Level B: *For products with a moderate level of component density. Provides a robust solder attachment condition for reflow solder processes.*
Density Level C: *For high component desity product applications. Before adapting the minimum land pattern variations, the user should perform qualification testing based on the conditions outlined in IPC standard 7351 (IPC–7351).*
[1] Height of these chips may create problems in wave soldering.
[2] Land pattern geometry is too small for silkscreen outline.

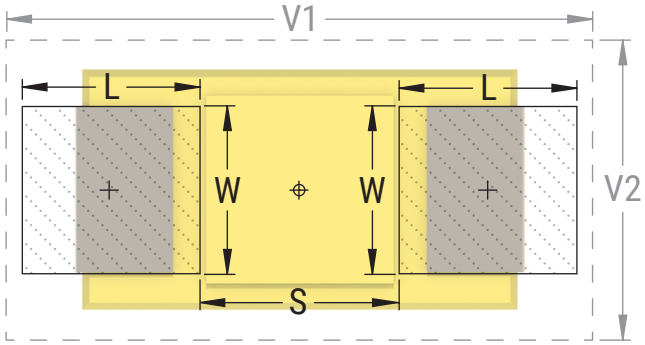

Grid Placement Courtyard

Downloaded from Arrow.com.

Soldering Process

KEMET's families of surface mount capacitors are compatible with wave (single or dual), convection, IR, or vapor phase reflow techniques. Preheating of these components is recommended to avoid extreme thermal stress. KEMET's recommended profile conditions for convection and IR reflow reflect the profile conditions of the IPC/J–STD–020D standard for moisture sensitivity testing. The devices can safely withstand a maximum of three reflow passes at these conditions.

Please note that although the X/7343–43 case size can withstand wave soldering, the tall profile (4.3 mm maximum) dictates care in wave process development.

Hand soldering should be performed with care due to the difficulty in process control. If performed, care should be taken to avoid contact of the soldering iron to the molded case. The iron should be used to heat the solder pad, applying solder between the pad and the termination, until reflow occurs. Once reflow occurs, the iron should be removed immediately. "Wiping" the edges of a chip and heating the top surface is not recommended.

During typical reflow operations, a slight darkening of the gold-colored epoxy may be observed. This slight darkening is normal and not harmful to the product. Marking permanency is not affected by this change.

Profile Feature	SnPb Assembly	Pb-Free Assembly
Preheat/Soak		
Temperature Minimum (T_{Smin})	100°C	150°C
Temperature Maximum (T_{Smax})	150°C	200°C
Time (t_s) from T_{smin} to T_{smax})	60 – 120 seconds	60 – 120 seconds
Ramp-up Rate (T_L to T_P)	3°C/second maximum	3°C/second maximum
Liquidous Temperature (T_L)	183°C	217°C
Time Above Liquidous (t_L)	60 – 150 seconds	60 – 150 seconds
Peak Temperature (T_P)	220°C* 235°C**	250°C* 260°C**
Time within 5°C of Maximum Peak Temperature (t_P)	20 seconds maximum	30 seconds maximum
Ramp-down Rate (T_P to T_L)	6°C/second maximum	6°C/second maximum
Time 25°C to Peak Temperature	6 minutes maximum	8 minutes maximum

Note: All temperatures refer to the center of the package, measured on the package body surface that is facing up during assembly reflow.
** For Case Size height > 2.5 mm*
*** For Case Size height ≤ 2.5 mm*

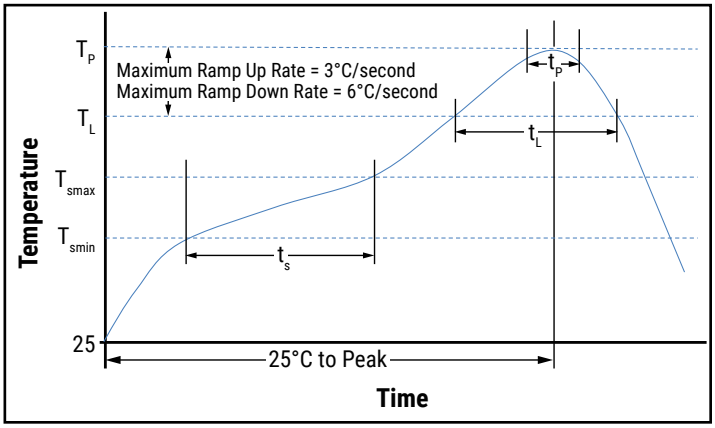

Storage

Tantalum chip capacitors should be stored in normal working environments. While the chips themselves are quite robust in other environments, solderability will be degraded by exposure to high temperatures, high humidity, corrosive atmospheres, and long term storage. In addition, packaging materials will be degraded by high temperature – reels may soften or warp and tape peel force may increase. KEMET recommends that maximum storage temperature not exceed 40°C and maximum storage humidity not exceed 60% relative humidity. Temperature fluctuations should be minimized to avoid condensation on the parts and atmospheres should be free of chlorine and sulphur bearing compounds. For optimized solderability chip stock should be used promptly, preferably within three years of receipt.

Downloaded from Arrow.com.

Construction

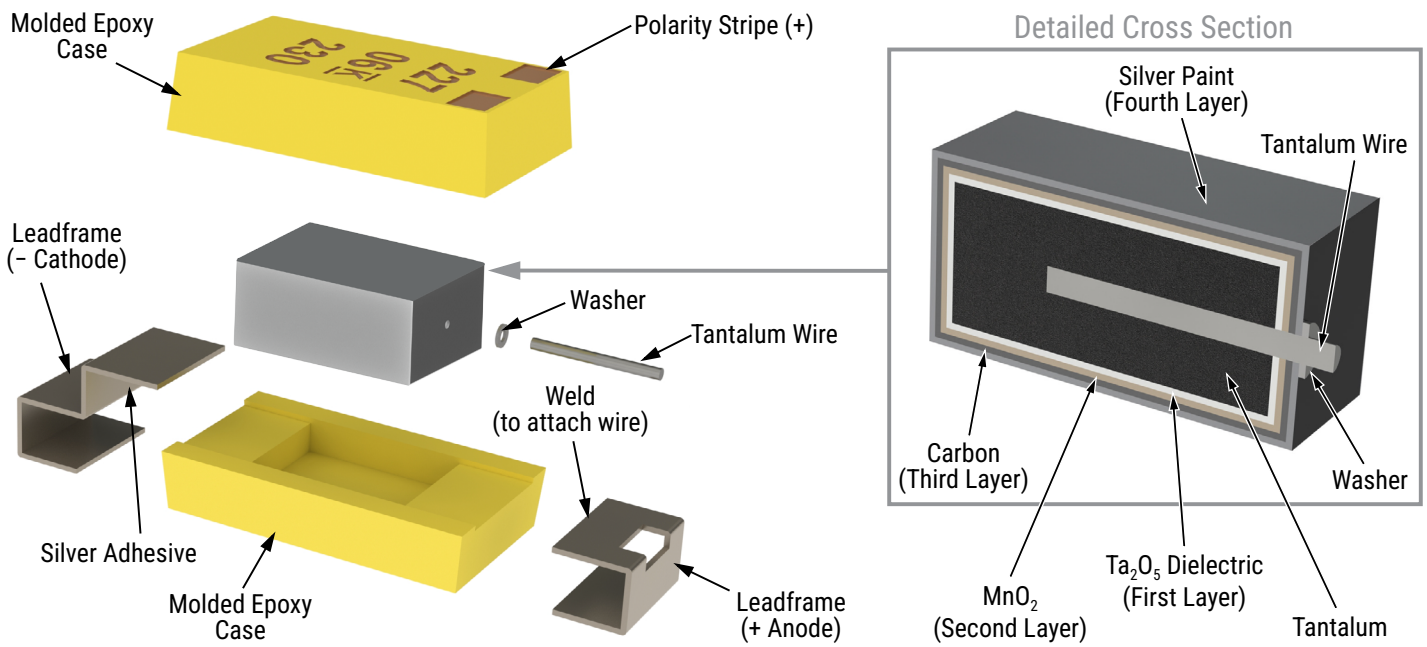

Capacitor Marking

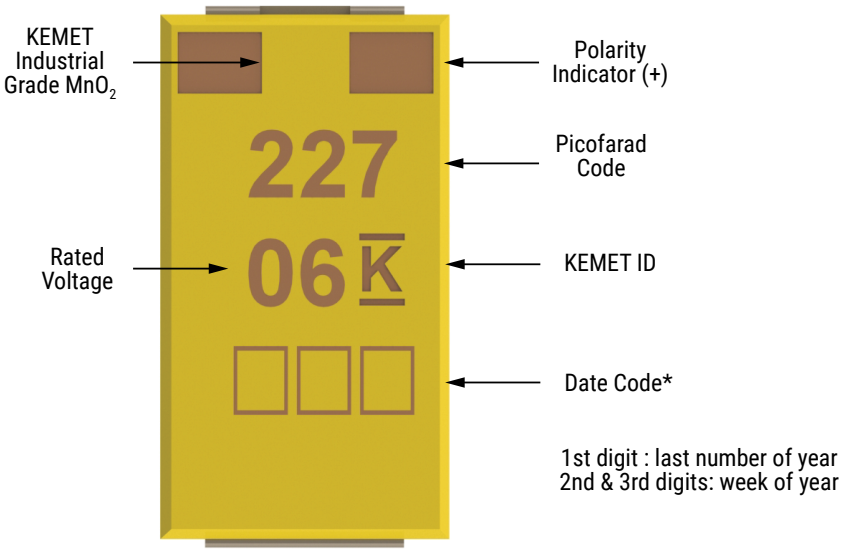

Downloaded from Arrow.com.

Tape & Reel Packaging Information

KEMET's molded chip capacitor families are packaged in 8 and 12 mm plastic tape on 7" and 13" reels in accordance with *EIA Standard 481*: Embossed Carrier Taping of Surface Mount Components for Automatic Handling. This packaging system is compatible with all tape-fed automatic pick-and-place systems.

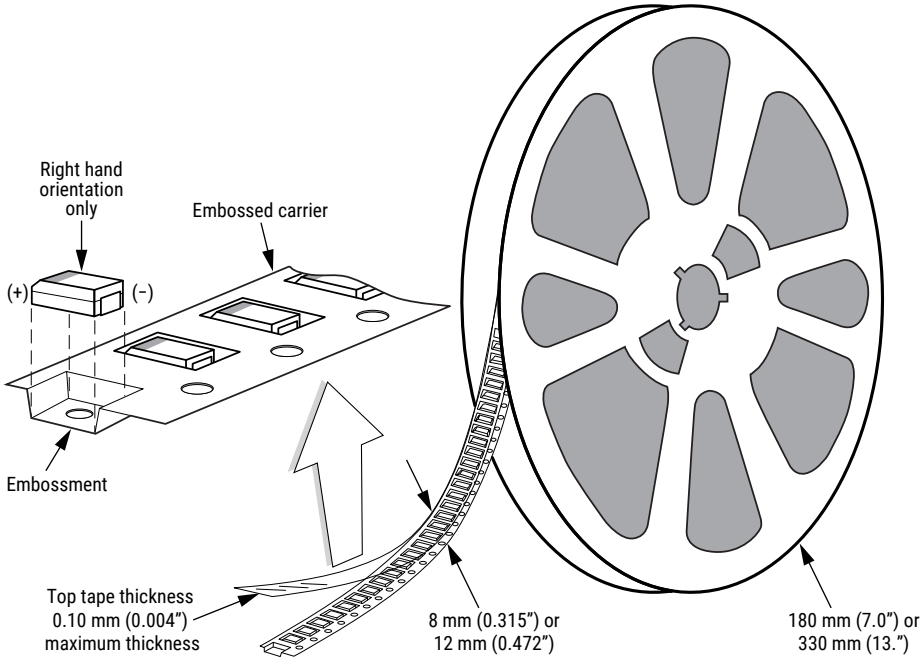

Table 3 – Packaging Quantity

Case Code		Tape Width (mm)	7" Reel*	13" Reel*
KEMET	EIA			
S	3216-12	8	2,500	10,000
T	3528-12	8	2,500	10,000
M	3528-15	8	2,500	8,000
U	6032-15	12	1,000	5,000
L	6032-19	12	1,000	3,000
W	7343-15	12	1,000	3,000
Z	7343-17	12	1,000	3,000
V	7343-20	12	1,000	3,000
A	3216-18	8	2,000	9,000
B	3528-21	8	2,000	8,000
C	6032-28	12	500	3,000
D	7343-31	12	500	2,500
Q	7343-12	12	1,000	3,000
Y	7343-40	12	500	2,000
X	7343-43	12	500	2,000
E/T428P	7360-38	12	500	2,000
H	7360-20	12	1,000	2,500
O	7360-43	12	250	1,000

** No C-Spec required for 7" reel packaging. C-7280 required for 13" reel packaging.*

Downloaded from Arrow.com.

Figure 1 – Embossed (Plastic) Carrier Tape Dimensions

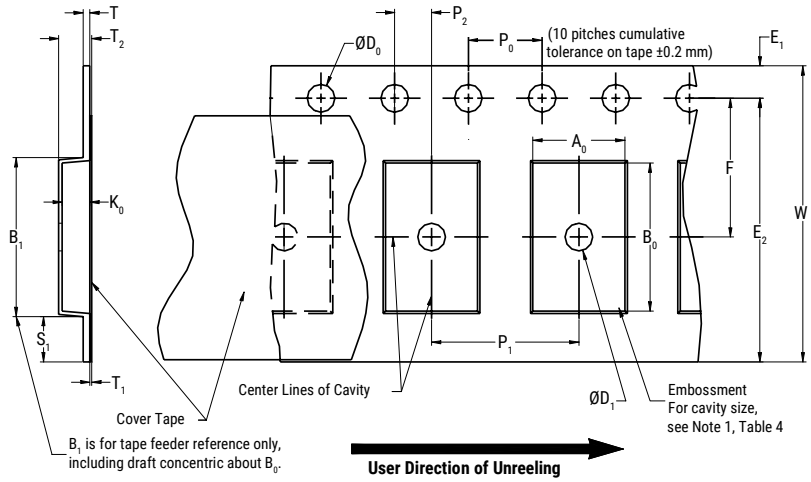

Table 4 – Embossed (Plastic) Carrier Tape Dimensions

Metric will govern

Constant Dimensions — Millimeters (Inches)									
Tape Size	D_0	D_1 Minimum Note 1	E_1	P_0	P_2	R Reference Note 2	S_1 Minimum Note 3	T Maximum	T_1 Maximum
8 mm	1.5 +0.10/−0.0 (0.059 +0.004/−0.0)	1.0 (0.039)	1.75 ±0.10 (0.069 ±0.004)	4.0 ±0.10 (0.157 ±0.004)	2.0 ±0.05 (0.079 ±0.002)	25.0 (0.984)	0.600 (0.024)	0.600 (0.024)	0.100 (0.004)
12 mm		1.5 (0.059)				30 (1.181)			

Variable Dimensions — Millimeters (Inches)								
Tape Size	Pitch	B_1 Maximum Note 4	E_2 Minimum	F	P_1	T_2 Maximum	W Maximum	A_0, B_0 & K_0
8 mm	Single (4 mm)	4.35 (0.171)	6.25 (0.246)	3.5 ±0.05 (0.138 ±0.002)	4.0 ±0.10 (0.157 ±0.004)	2.5 (0.098)	8.3 (0.327)	Note 5
12 mm	Single (4 mm) and Double (8 mm)	8.2 (0.323)	10.25 (0.404)	5.5 ±0.05 (0.217 ±0.002)	4.0 ±0.10 (0.157 ±0.004) or 8.0 ±0.10 (0.315 ±0.004)	4.6 (0.181)	12.3 (0.484)	

1. *The embossment hole location shall be measured from the sprocket hole controlling the location of the embossment. Dimensions of embossment location and hole location shall be applied independent of each other.*
2. *The tape, with or without components, shall pass around R without damage (see Figure 4).*
3. *If S_1 < 1.0 mm, there may not be enough area for cover tape to be properly applied (see EIA Standard 481–D, paragraph 4.3, section b).*
4. *B_1 dimension is a reference dimension for tape feeder clearance only.*
5. *The cavity defined by A_0, B_0 and K_0 shall surround the component with sufficient clearance that:*
   (a) the component does not protrude above the top surface of the carrier tape.
   (b) the component can be removed from the cavity in a vertical direction without mechanical restriction, after the top cover tape has been removed.
   (c) rotation of the component is limited to 20° maximum for 8 and 12 mm tapes (see Figure 2).
   (d) lateral movement of the component is restricted to 0.5 mm maximum for 8 mm and 12 mm wide tape (see Figure 3).
   (e) see Addendum in EIA Standard 481–D for standards relating to more precise taping requirements.

Downloaded from Arrow.com.

Packaging Information Performance Notes

1. Cover tape break force: 1.0 kg minimum.
2. Cover tape peel strength: The total peel strength of the cover tape from the carrier tape shall be:

Tape Width	Peel Strength
8 mm	0.1 to 1.0 newton (10 to 100 gf)
12 mm	0.1 to 1.3 newton (10 to 130 gf)

The direction of the pull shall be opposite the direction of the carrier tape travel. The pull angle of the carrier tape shall be 165° to 180° from the plane of the carrier tape. During peeling, the carrier and/or cover tape shall be pulled at a velocity of 300 ±10 mm/minute.
3. Labeling: Bar code labeling (standard or custom) shall be on the side of the reel opposite the sprocket holes. *Refer to EIA Standards 556 and 624*.

Figure 2 – Maximum Component Rotation

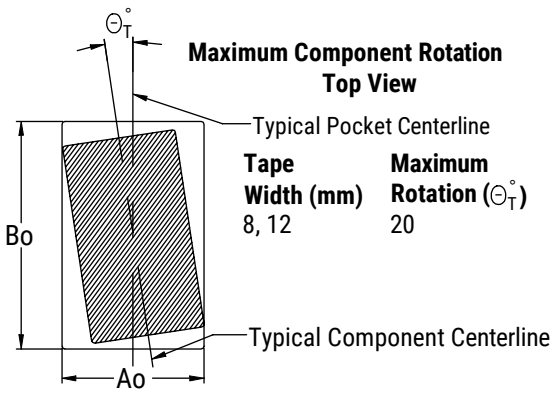

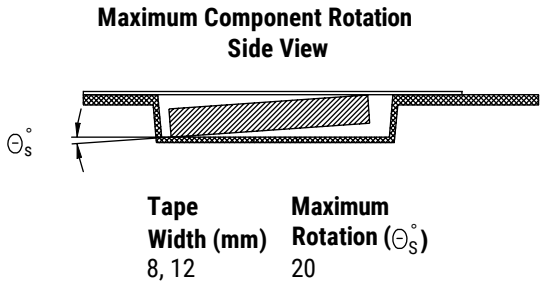

Figure 3 – Maximum Lateral Movement

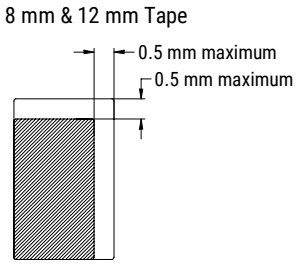

Figure 4 – Bending Radius

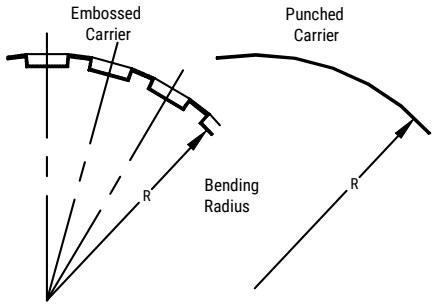

Downloaded from Arrow.com.

Figure 5 – Reel Dimensions

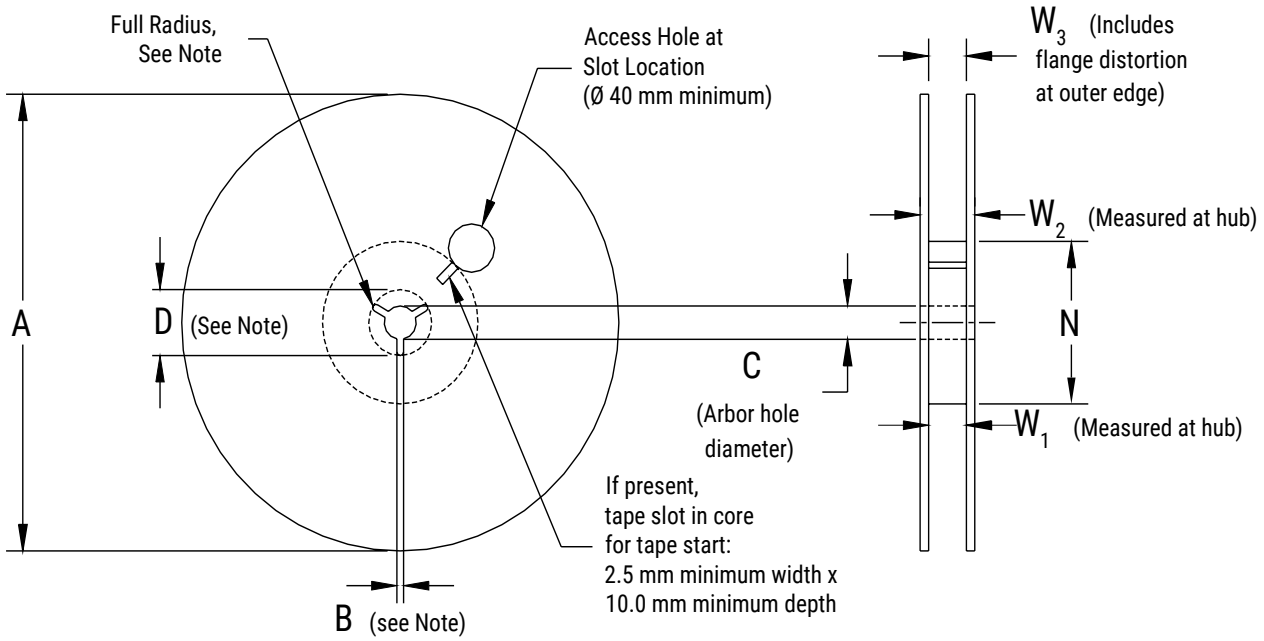

Note: Drive spokes optional; if used, dimensions B and D shall apply.

Table 5 – Reel Dimensions

Metric will govern

Constant Dimensions — Millimeters (Inches)				
Tape Size	A	B Minimum	C	D Minimum
8 mm	178 ±0.20 (7.008 ±0.008) or 330 ±0.20 (13.000 ±0.008)	1.5 (0.059)	13.0 +0.5/−0.2 (0.521 +0.02/−0.008)	20.2 (0.795)
12 mm				

Variable Dimensions — Millimeters (Inches)				
Tape Size	N Minimum	W_1	W_2 Maximum	W_3
8 mm	50 (1.969)	8.4 +1.5/−0.0 (0.331 +0.059/−0.0)	14.4 (0.567)	Shall accommodate tape width without interference
12 mm		12.4 +2.0/−0.0 (0.488 +0.078/−0.0)	18.4 (0.724)	

Downloaded from Arrow.com.

Figure 6 – Tape Leader & Trailer Dimensions

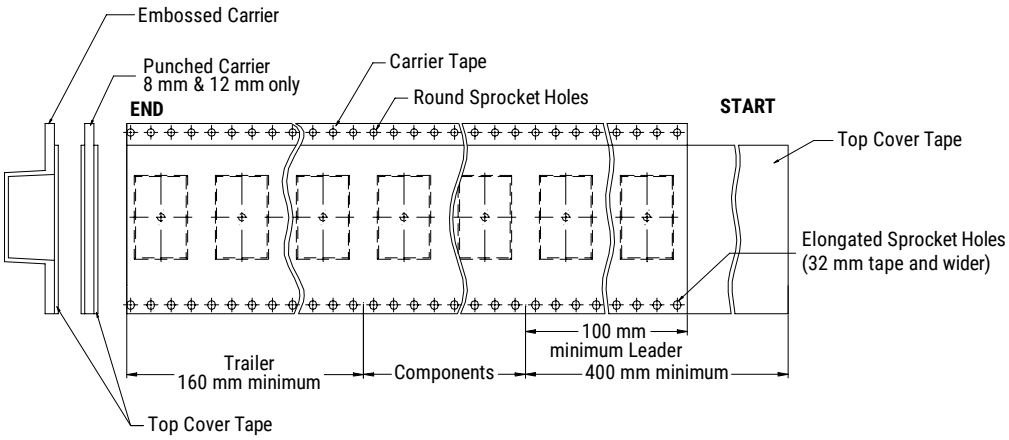

Figure 7 – Maximum Camber

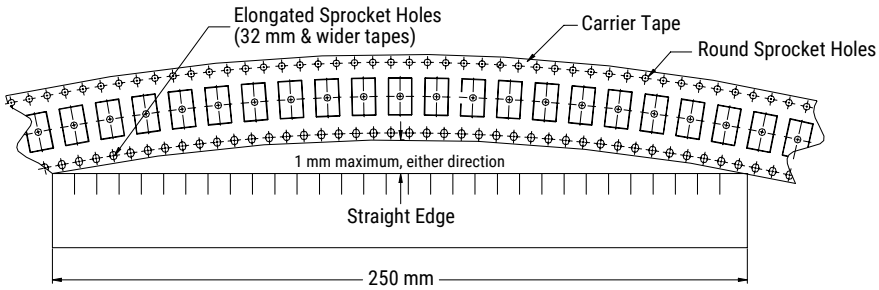

Downloaded from Arrow.com.

KEMET Electronics Corporation Sales Offices

For a complete list of our global sales offices, please visit https://www.yageogroup.com/SalesResources/SalesOffices

Disclaimer

YAGEO Corporation and its affiliates do not recommend the use of commercial or automotive grade products for high reliability applications or manned space flight.

All product specifications, statements, information and data (collectively, the "Information") in this datasheet are subject to change. The customer is responsible for checking and verifying the extent to which the Information contained in this publication is applicable to an order at the time the order is placed. All Information given herein is believed to be accurate and reliable, but it is presented without guarantee, warranty, or responsibility of any kind, expressed or implied.

Statements of suitability for certain applications are based on KEMET Electronics Corporation's ("KEMET") knowledge of typical operating conditions for such applications, but are not intended to constitute – and KEMET specifically disclaims – any warranty concerning suitability for a specific customer application or use. The Information is intended for use only by customers who have the requisite experience and capability to determine the correct products for their application. Any technical advice inferred from this Information or otherwise provided by KEMET with reference to the use of KEMET's products is given gratis, and KEMET assumes no obligation or liability for the advice given or results obtained.

Although KEMET designs and manufactures its products to the most stringent quality and safety standards, given the current state of the art, isolated component failures may still occur. Accordingly, customer applications which require a high degree of reliability or safety should employ suitable designs or other safeguards (such as installation of protective circuitry or redundancies) in order to ensure that the failure of an electrical component does not result in a risk of personal injury or property damage.

Although all product–related warnings, cautions and notes must be observed, the customer should not assume that all safety measures are indicated or that other measures may not be required.

KEMET is a registered trademark of KEMET Electronics Corporation.

Downloaded from Arrow.com.