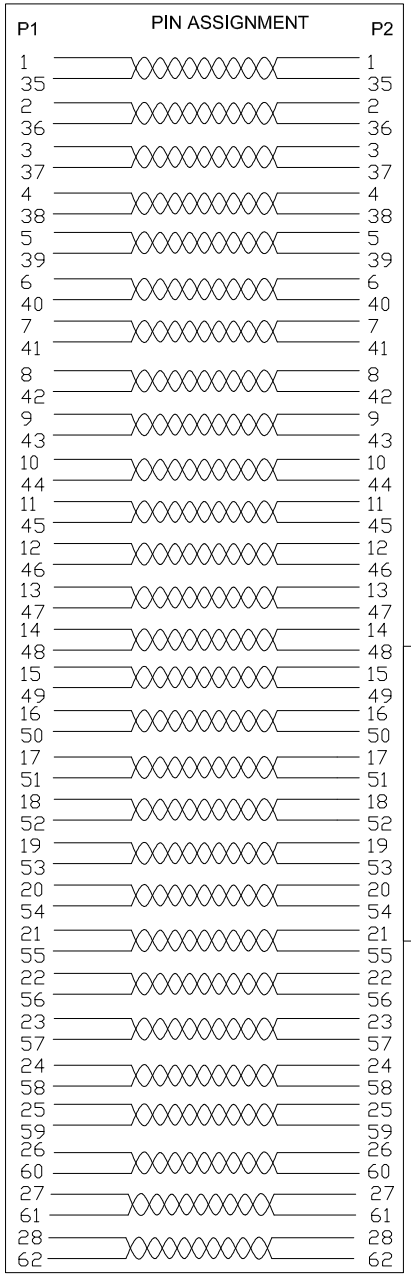

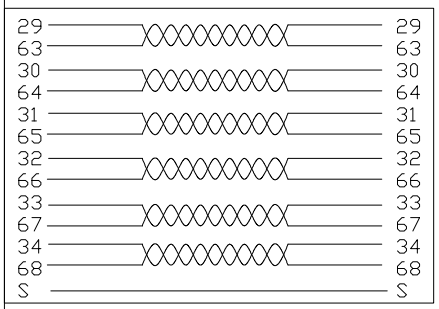

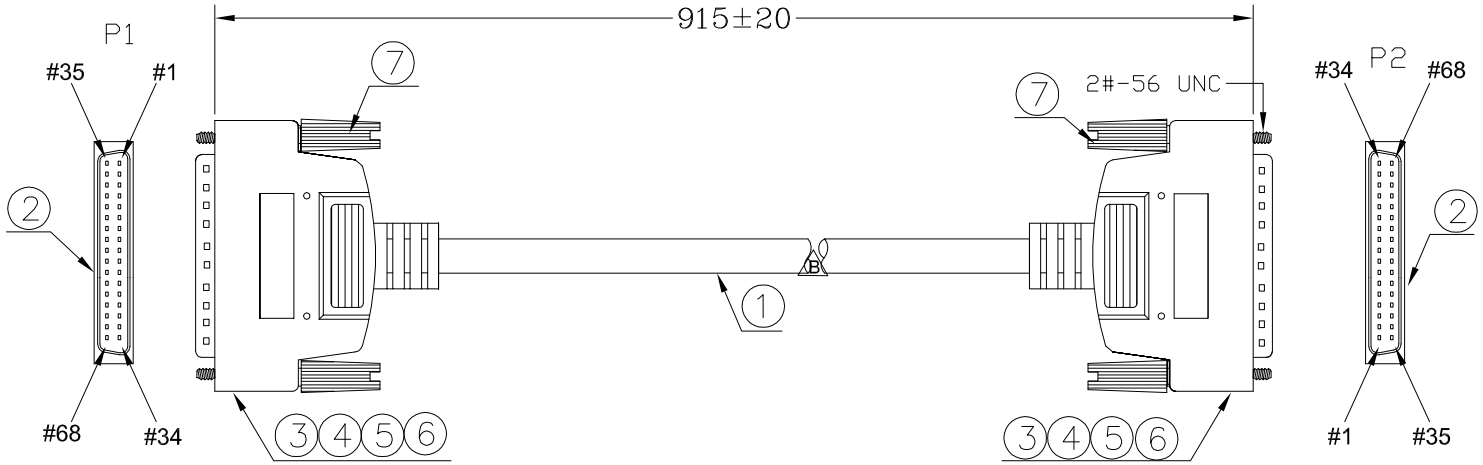

NO	DESCRIPTION	QTY	UNIT
7	SRW-E24/BEIGE02)(2#-56UNC)	4	PCS
6	PVC-BEIGE02/50	68	G
5	PE-5321	18	G
4	FOIL-CU-27MM	110.0*2	MM
3	HI TEAMP TAPE:20MM	155.0*2	MM
2	HPDB-68P<BK>/ID:0.62MM IDC TYPE MOLDING	2	SET
1	28#-34P+A+D+B-BE02-9.5U2919(ID:0.62MM)	0.975	M

RoHS compliant

Unit: mm

Scale	Free
TOLERANCE	
DIM	TOL
Angle	TOL

Id.	Modification	Date	Name
0	Drawn	19.01.2017	Amy

	Date	Name
Drawn	19.01.2017	Amy
Approved	19.01.2017	Amy

ASSMANN WSW components

Customer-No.

ASSMANN WSW-No. AK-Y1301

Drawing-No. ASS 7836 CA

rev00

Replace

Sheet 1 / 2

Downloaded from Arrow.com.

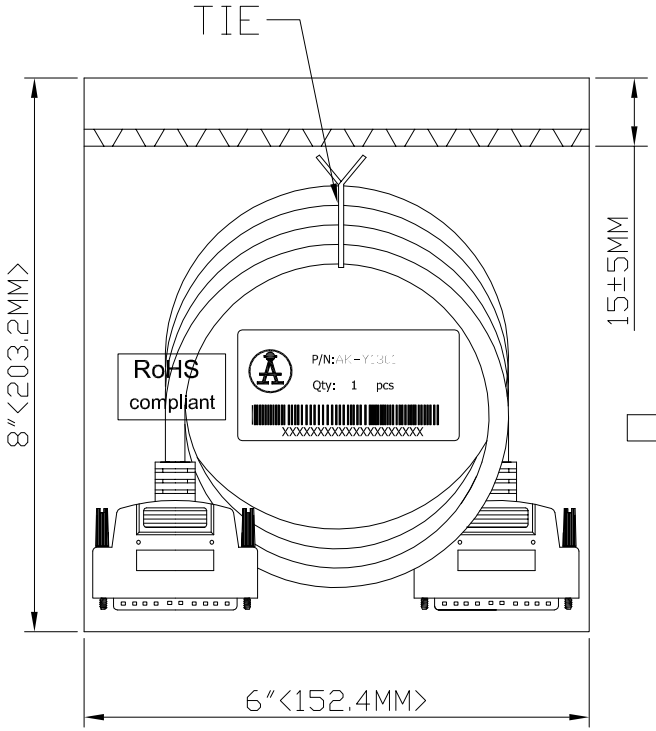

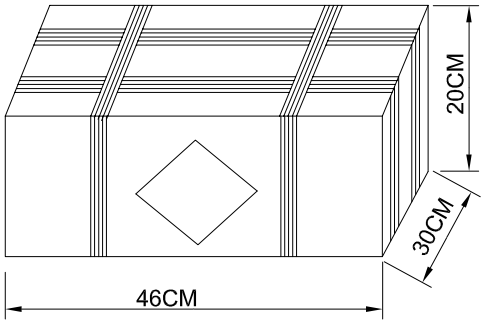

Q'TY: 50 PCS

CARTON:46*30*20CM

PE BAG:6"*8"*0.06MM
1PCS/PE BAG

RoHS compliant
Unit: mm

Scale	Free					Date	Name	Customer-No.
TOLERANCE					Drawn	19.01.2017	Amy	
					Approved	19.01.2017	Amy	ASSMANN WSW-No. AK-Y1301
DIM	TOL							Drawing-No. ASS 7836 CA rev00
		⓪	Drawn	19.01.2017	Amy			
Angle	TOL	Id.	Modification	Date	Name			Replace / Sheet 2 / 2

ASSMANN WSW components

Downloaded from Arrow.com.