MPQ6610

55V, 3A, Half-Bridge Power Driver, AEC-Q100 Qualified

DESCRIPTION

The MPQ6610 is a half-bridge driver with current measurement and regulation features. It can operate from a 4V to 55V supply voltage, and can deliver up to 3A of output current (depending on the package, PCB design, and ambient temperature). The MPQ6610 can be used to drive brushed DC motors, solenoids, or other loads.

An internal current-sense circuit provides an output with a voltage that is proportional to the load current. Cycle-by-cycle current regulation and limiting are also provided. These features do not require the use of a low-Ohmic shunt resistor.

Internal diagnostic and protection features include open-load detection, over-current protection (OCP), under-voltage lockout (UVLO), and thermal shutdown.

The MPQ6610 is available in 8-pin TSOT23 and SOIC-8 packages. Note that due to the small pin spacing, the TSOT23 package is only recommended for applications up to 45V, unless conformal coating or encapsulation is used.

FEATURES

- Wide 4V to 55V Input Voltage Range
- 3A Maximum Output Current
- Internal Half-Bridge Driver
- Cycle-by-Cycle Current Regulation/Limiting
- Low On Resistance (High Side: 100mΩ, Low Side: 120mΩ)
- No Control Power Supply Required
- Simple, Versatile Logic Interfaces
- Inputs Compatible with 2.5V, 3.3V, and 5V Logic
- Over-Current Protection (OCP)
- Open-Load Detection
- Thermal Shutdown
- Under-Voltage Lockout (UVLO)
- Fault Indication Output
- Thermally Enhanced Package
- Available in TSOT23 and SOIC-8 Packages
- Available in AEC-Q100 Grade 1

APPLICATIONS

- Solenoid Drivers
- Relay Drivers
- Brushed DC Motor Drivers

All MPS parts are lead-free, halogen-free, and adhere to the RoHS directive. For MPS green status, please visit the MPS website under Quality Assurance. "MPS", the MPS logo, and "Simple, Easy Solutions" are trademarks of Monolithic Power Systems, Inc. or its subsidiaries.

TYPICAL APPLICATION

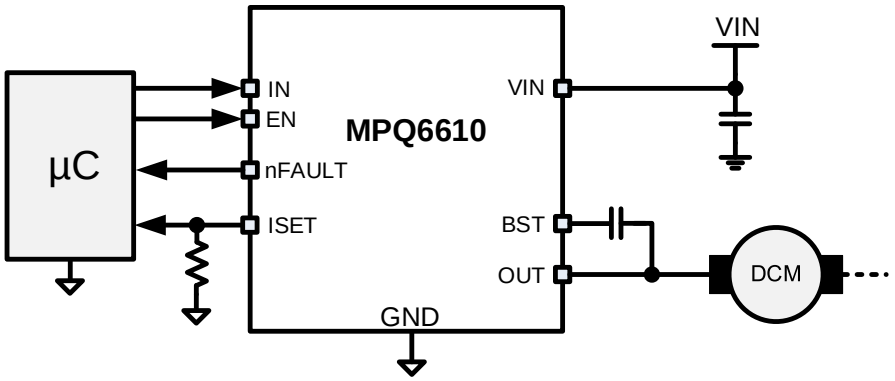

MPS Proprietary Information. Patent Protected. Unauthorized Photocopy and Duplication Prohibited.
© 2020 MPS. All Rights Reserved.

Downloaded from Arrow.com.

ORDERING INFORMATION

Part Number*	Package	Top Marking	MSL Rating
MPQ6610GJ-AEC1*	TSOT23-8	*See Below*	1
MPQ6610GS-AEC1**	SOIC-8	*See Below*	

* For Tape & Reel, add suffix –Z (e.g. MPQ6610GJ-AEC1–Z).
** For Tape & Reel, add suffix –Z (e.g. MPQ6610GS-AEC1–Z).

TOP MARKING (MPQ6610GJ-AEC1)

| AVRY

AVR: Product code of MPQ6610GJ-AEC1
Y: Year code

TOP MARKING (MPQ6610GS-AEC1)

MP6610
LLLLLLLL
MPSYWW

MP6610: Part number
LLLLLLLL: Lot number
MPS: MPS prefix
Y: Year code
WW: Week code

PACKAGE REFERENCE

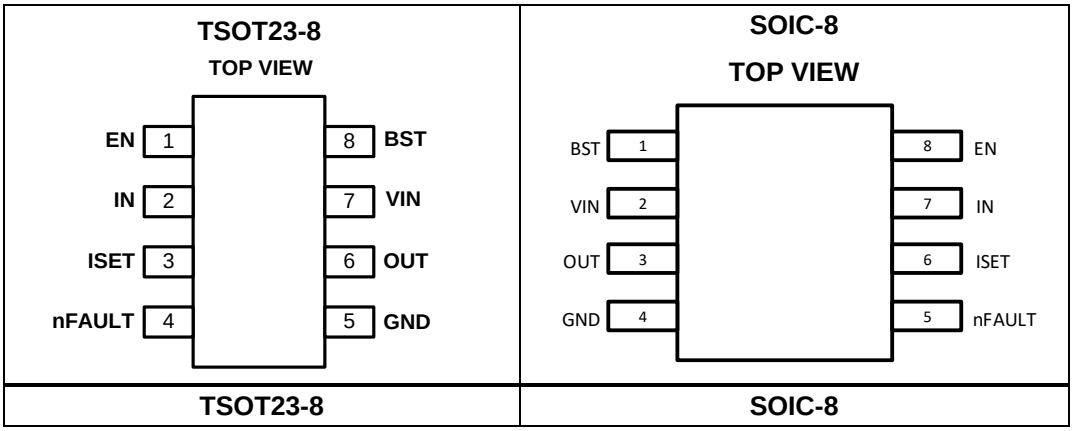

MPS Proprietary Information. Patent Protected. Unauthorized Photocopy and Duplication Prohibited.
© 2020 MPS. All Rights Reserved.

Downloaded from Arrow.com.

PIN FUNCTIONS

Pin # (TSOT23)	Pin # (SOIC-8)	Name	Description
1	8	EN	**H-bridge enable input.** Drive EN high to enable the half-bridge driver. The EN pin is pulled down with an internal resistor.
2	7	IN	**H-bridge input pin.** Drive IN high to drive the output high. The IN pin is pulled down with an internal resistor.
3	6	ISET	**Current configuration resistor.** Connect a resistor from ISET to ground to set the current limit and ISET pin voltage scaling.
4	5	nFAULT	**Fault indication.** The nFAULT pin is an open drain. It is logic low if a fault condition (e.g. over-current protection [OCP], over-temperature protection [OTP], or open load) occurs.
5	4	GND	**System ground connection.**
6	3	OUT	**Output terminal.**
7	2	VIN	**Input supply voltage.** Decouple VIN to GND with a minimum 100nF ceramic capacitor.
8	1	BST	**Bootstrap pin.** Connect a 100nF capacitor to the BST and OUT pins.

ABSOLUTE MAXIMUM RATINGS (1)

Supply voltage (V_{IN}) .....-0.3V to +65V
OUT voltage (V_{OUT}) .....-0.7V to +65V
BST .....V_{IN} to V_{IN} + 5.7V
ISET .....-0.3V to +5.5V
All other pins to GND .....-0.3V to +6.5V
Continuous power dissipation (T_A = 25°C) (2)
TSOT23 package……..... 1.25W
SOIC package……..... 1.302W
Storage temperature ..... -55°C to +150°C
Junction temperature .....150°C
Lead temperature (solder) .....260°C

ESD Ratings

Human body model (HBM) 2kV
Charged device model (CDM).....±750V

Recommended Operating Conditions (3)

Supply voltage (V_{IN}) (SOIC) .....4V to 55V
Supply voltage (V_{IN}) (SOT23) .....4V to 45V
Output current (I_{OUT})..... ±3A
Operating junction temp (T_J) .... -40°C to +125°C

Thermal Resistance (4) θ_{JA} θ_{JC}

TSOT23 package.....100.....55...°C/W
SOIC package.....96.....45...°C/W

Notes:

1) Exceeding these ratings may damage the device.
2) The maximum allowable power dissipation is a function of the maximum junction temperature, T_J (MAX), the junction-to-ambient thermal resistance, θ_{JA}, and the ambient temperature, T_A. The maximum allowable continuous power dissipation at any ambient temperature is calculated by P_D (MAX) = (T_J (MAX) - T_A) / θ_{JA}. Exceeding the maximum allowable power dissipation can cause excessive die temperature, and the regulator may go into thermal shutdown. Internal thermal shutdown circuitry protects the device from permanent damage.
3) The device is not guaranteed to function outside of its operating conditions.
4) Measured on JESD51-7, 4-layer PCB.

MPS Proprietary Information. Patent Protected. Unauthorized Photocopy and Duplication Prohibited.
© 2020 MPS. All Rights Reserved.

Downloaded from Arrow.com.

ELECTRICAL CHARACTERISTICS

V_{IN} = 24V, T_A = -40°C to +125°C, unless otherwise noted.

Parameter	Symbol	Condition	Min	Typ	Max	Units
Power Supply						
Input supply voltage	V_{IN}	SOIC-8 package	4		55	V
		TSOT23 package	4		45	
Quiescent current	I_Q	V_{IN} = 24V, EN = 0, no load current		1.3	5	mA
Internal MOSFETs						
Output on resistance	R_{HS}	V_{IN} = 24V, I_{OUT} = 1A, T_J = 25°C		100	120	mΩ
		V_{IN} = 24V, I_{OUT} = 1A, T_J = 125°C		120	200	mΩ
	R_{LS}	V_{IN} = 24V, I_{OUT} = 1A, T_J = 25°C		120	150	mΩ
		V_{IN} = 24V, I_{OUT} = 1A, T_J = 125°C		150	256	mΩ
Body diode forward voltage	V_F	I_{OUT} = 1A			1.1	V
Control Logic						
Input logic low threshold	V_{IL}				0.8	V
Input logic high threshold	V_{IH}		2			V
Logic input current	$I_{IN(H)}$	V_{IH} = 5V	6		14	µA
	$I_{IN(L)}$	V_{IL} = 0.8V			4	µA
Internal pull-down resistance	R_{PD}			530		kΩ
nFault Output (Open-Drain Output)						
Output low voltage	V_{OL}	I_{OUT} = 5mA			0.8	V
Output high leakage current	I_{OH}	V_{OUT} = 3.3V			1	µA
Protection Circuits						
UVLO rising threshold	V_{UV_RISE}				4.1	V
UVLO hysteresis	V_{UV_HYS}			300		mV
OVP rising threshold	V_{OV_RISE}		55		65	V
OVP hysteresis	V_{OV_YS}			900		mV
Over-current trip level	I_{OCP1}	Sink	3			A
	I_{OCP2}	Source	3			A
Over-current deglitch time (5)	t_{OCP}			1		µs
Over-current retry time	t_{OCPR}			1.6		ms
Thermal shutdown	T_{TSD}			165		°C
Thermal shutdown hysteresis	ΔT_{TSD}			15		°C
Open-load current detection	I_{OLD}			90		µA
Open-load detection threshold	V_{OLD}	OUT = low	1		1.5	V
		OUT = high, V_{IN} = 24V	21.5		23.2	

Notes:

5) Not tested in production.

MPS Proprietary Information. Patent Protected. Unauthorized Photocopy and Duplication Prohibited.
© 2020 MPS. All Rights Reserved.

Downloaded from Arrow.com.

ELECTRICAL CHARACTERISTICS *(continued)*

V_{IN} = 24V, T_A = -40°C to +125°C, unless otherwise noted.

Parameter	Symbol	Condition	Min	Typ	Max	Units
Current Control						
Off time	t_{ITRIP}	After V_{ITRIP} is reached		16.5		µs
Blanking time	t_{BLANK}			1		µs
ISET current	I_{ISET}	HS source, I_{OUT} = 1A	69	90	118	µA/A
		HS sink, I_{OUT} = 1A	82	102	131	
		LS source, I_{OUT} = 1A	83	104	130	
		LS sink, I_{OUT} = 1A	82	103	129	
Current trip voltage	V_{ITRIP}	At ISET pin	1.4	1.5	1.6	V

MPS Proprietary Information. Patent Protected. Unauthorized Photocopy and Duplication Prohibited.
© 2020 MPS. All Rights Reserved.

Downloaded from Arrow.com.

TYPICAL CHARACTERISTICS

Quiescent Current vs. Temperature
V_{IN} = 24V

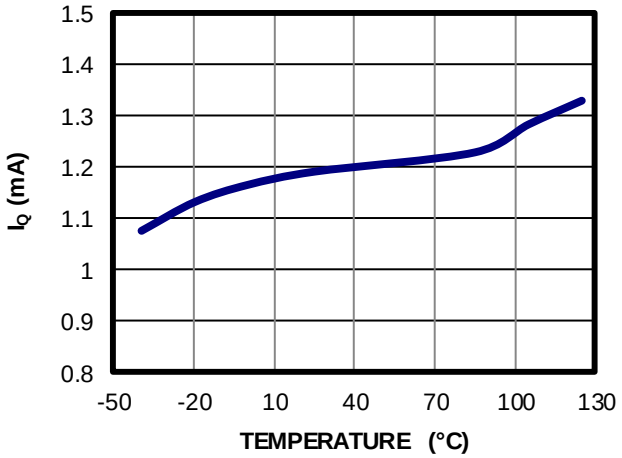

VIN UVLO Rising Threshold vs. Temperature

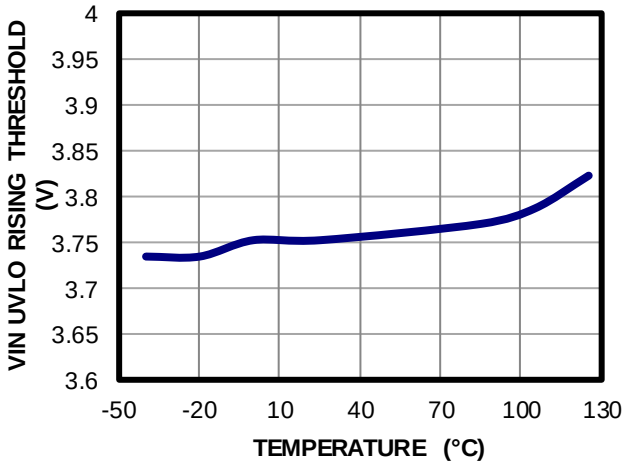

OVP Rising Threshold vs. Temperature

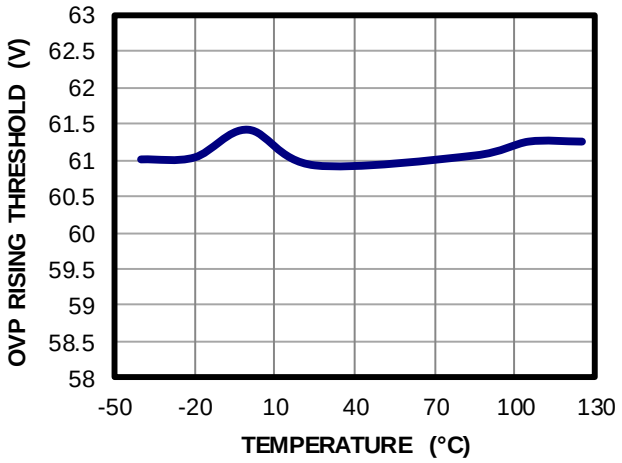

Current Trip Voltage vs. Temperature

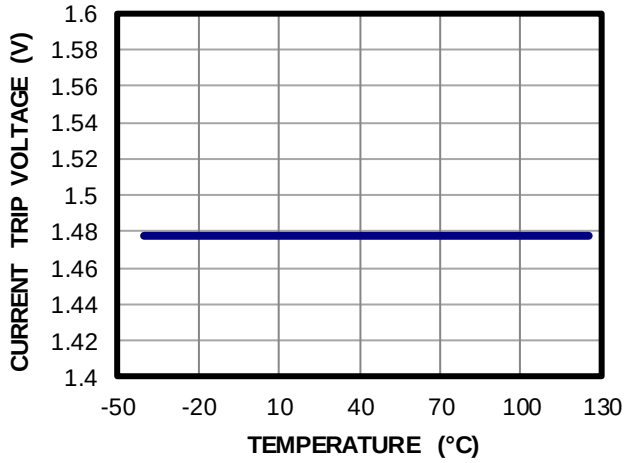

ISET Current vs. Temperature
High-side source current, I_{OUT} = 1A

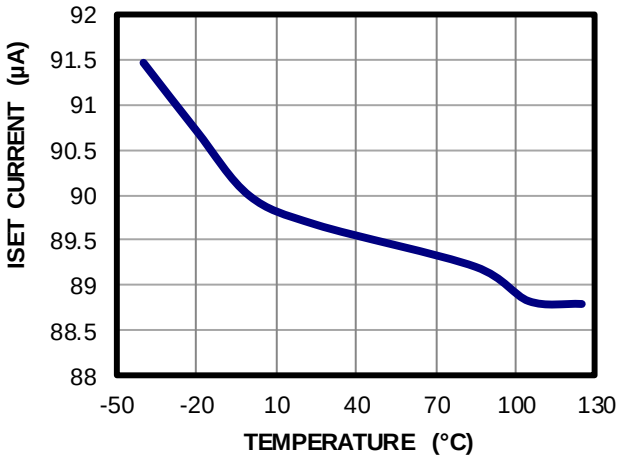

ISET Current vs. Temperature
High-side sink current, I_{OUT} = 1A

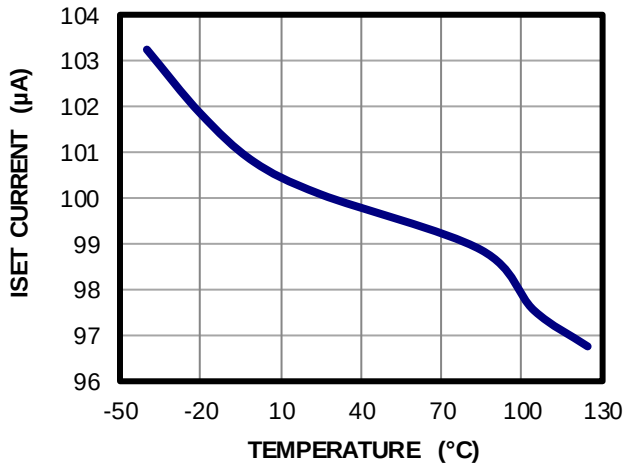

MPS Proprietary Information. Patent Protected. Unauthorized Photocopy and Duplication Prohibited.
© 2020 MPS. All Rights Reserved.

Downloaded from Arrow.com.

TYPICAL CHARACTERISTICS *(continued)*

ISET Current vs. Temperature
Low-side source current, I_{OUT} = 1A

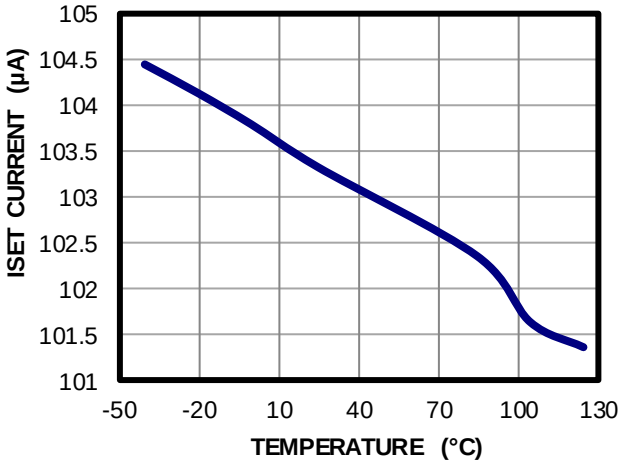

ISET Current vs. Temperature
Low-side sink current, I_{OUT} = 1A

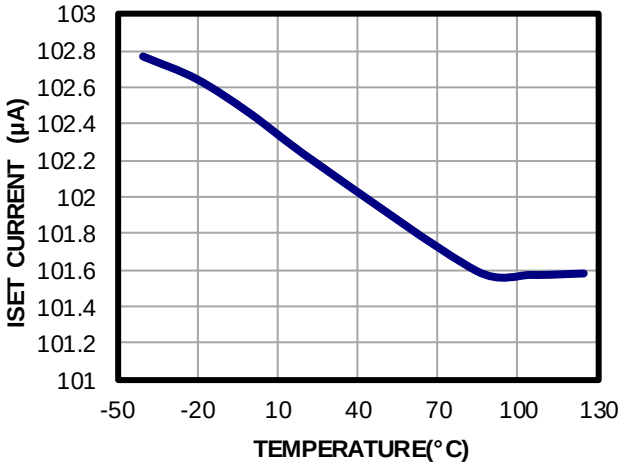

HS On Resistance vs. Temperature
I_{OUT} = 1A

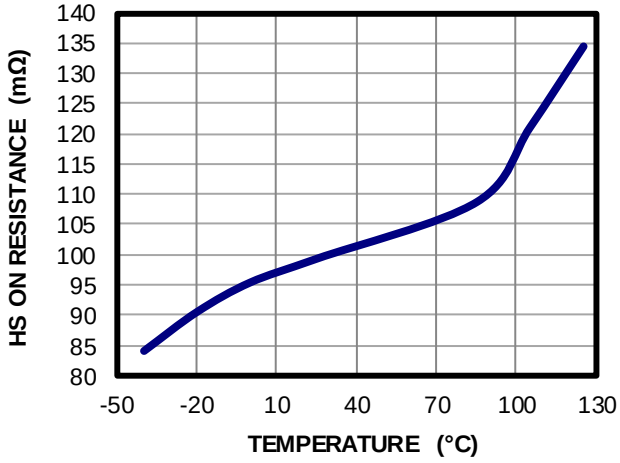

LS On Resistance vs. Temperature
I_{OUT} = 1A

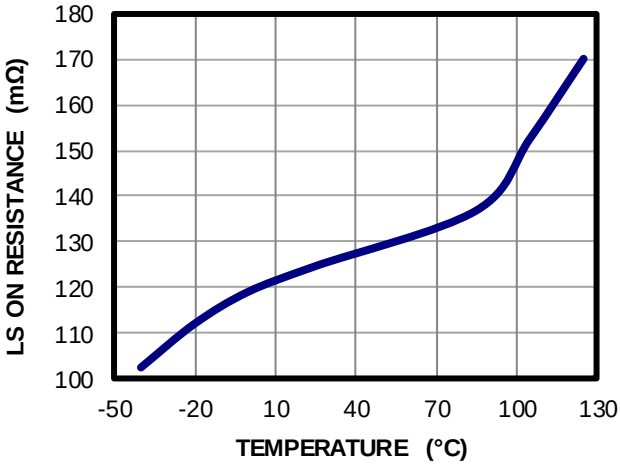

MPS Proprietary Information. Patent Protected. Unauthorized Photocopy and Duplication Prohibited.
© 2020 MPS. All Rights Reserved.

Downloaded from Arrow.com.

TYPICAL PERFORMANCE CHARACTERISTICS

V_{IN} = 24V, EN = high, IN = 20kHz with 50% duty, R_{ISET} = 10kΩ, resistor + inductor load: 10Ω + 2mH, T_A = 25°C, unless otherwise noted.

Steady State
Load to GND

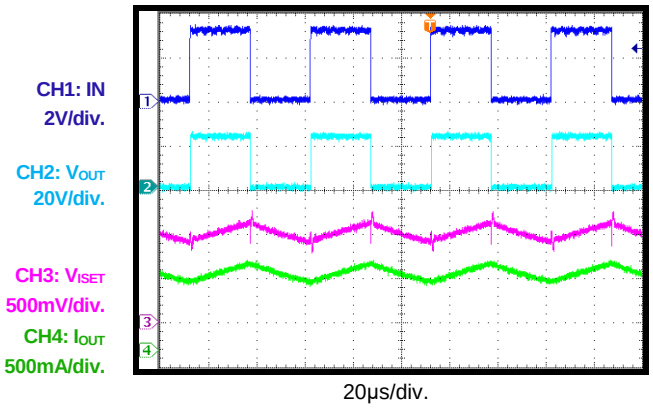

Steady State
Load to VIN

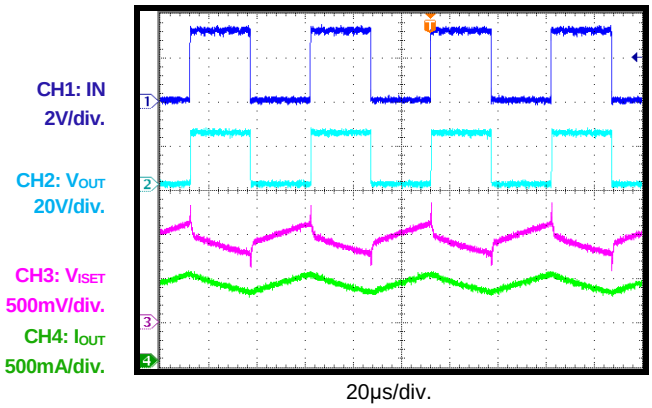

Power Ramping Up
Load to GND

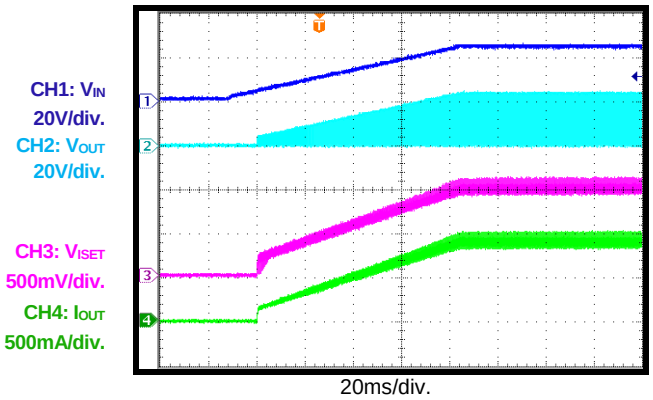

Power Ramping Up
Load to VIN

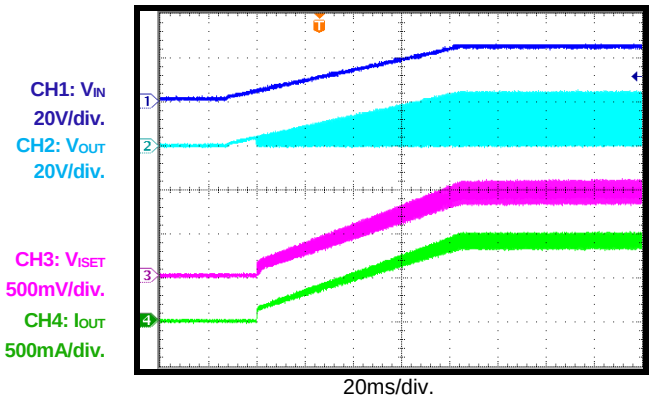

Power Ramping Down
Load to GND

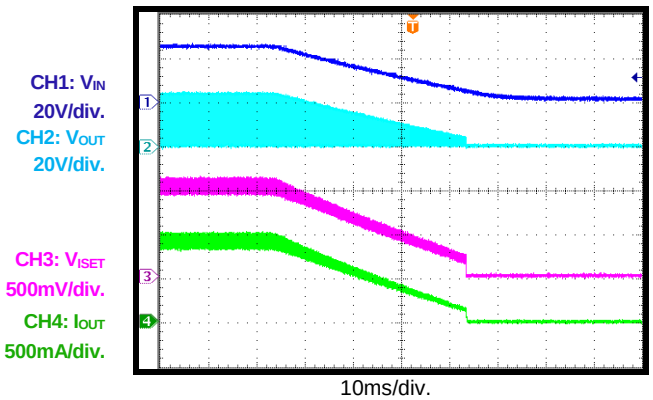

Power Ramping Down
Load to VIN

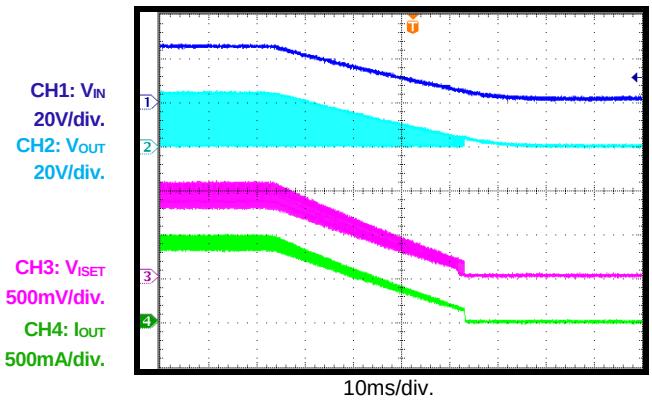

MPS Proprietary Information. Patent Protected. Unauthorized Photocopy and Duplication Prohibited.
© 2020 MPS. All Rights Reserved.

Downloaded from Arrow.com.

TYPICAL PERFORMANCE CHARACTERISTICS *(continued)*

V_{IN} = 24V, EN = high, IN = 20kHz with 50% duty, R_{ISET} = 10kΩ, resistor + inductor load: 10Ω + 2mH, T_A = 25°C, unless otherwise noted.

Start-Up through EN
Load to GND

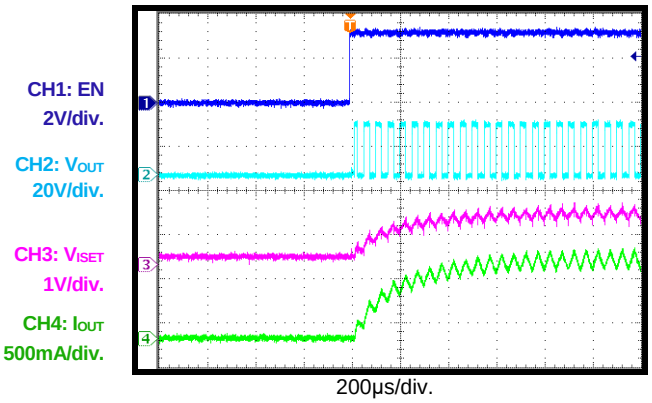

Start-Up through EN
Load to VIN

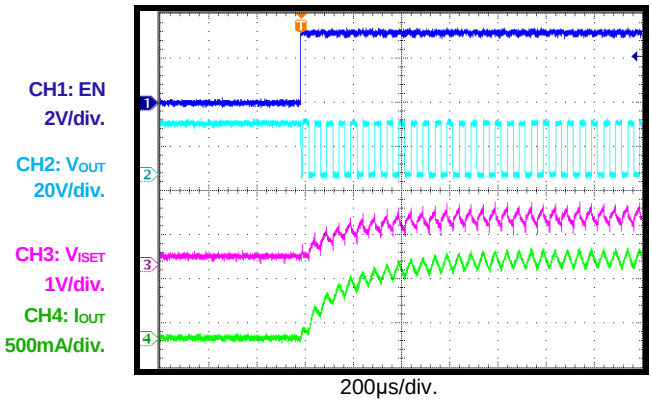

Shutdown through EN
Load to GND

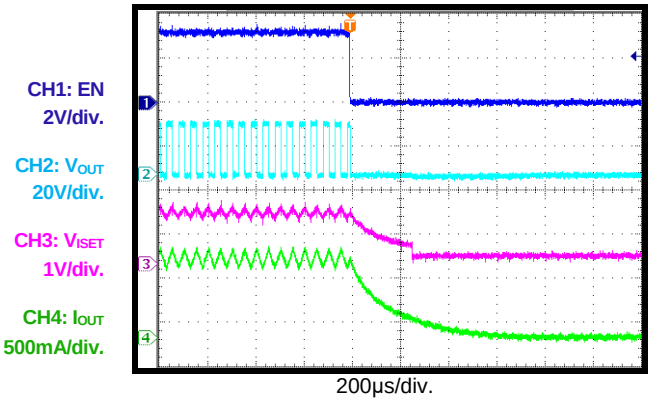

Shutdown through EN
Load to VIN

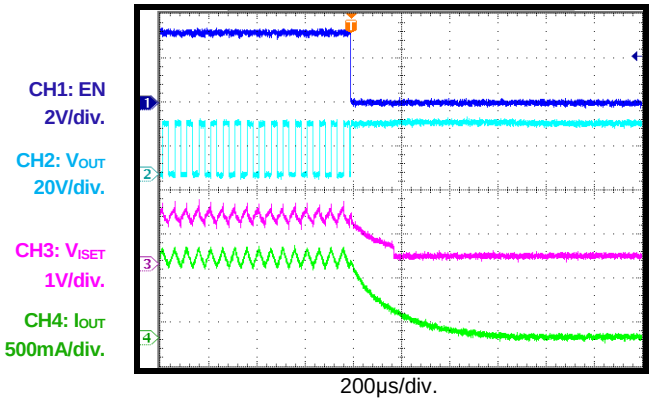

MPS Proprietary Information. Patent Protected. Unauthorized Photocopy and Duplication Prohibited.
© 2020 MPS. All Rights Reserved.

Downloaded from Arrow.com.

FUNCTIONAL BLOCK DIAGRAM

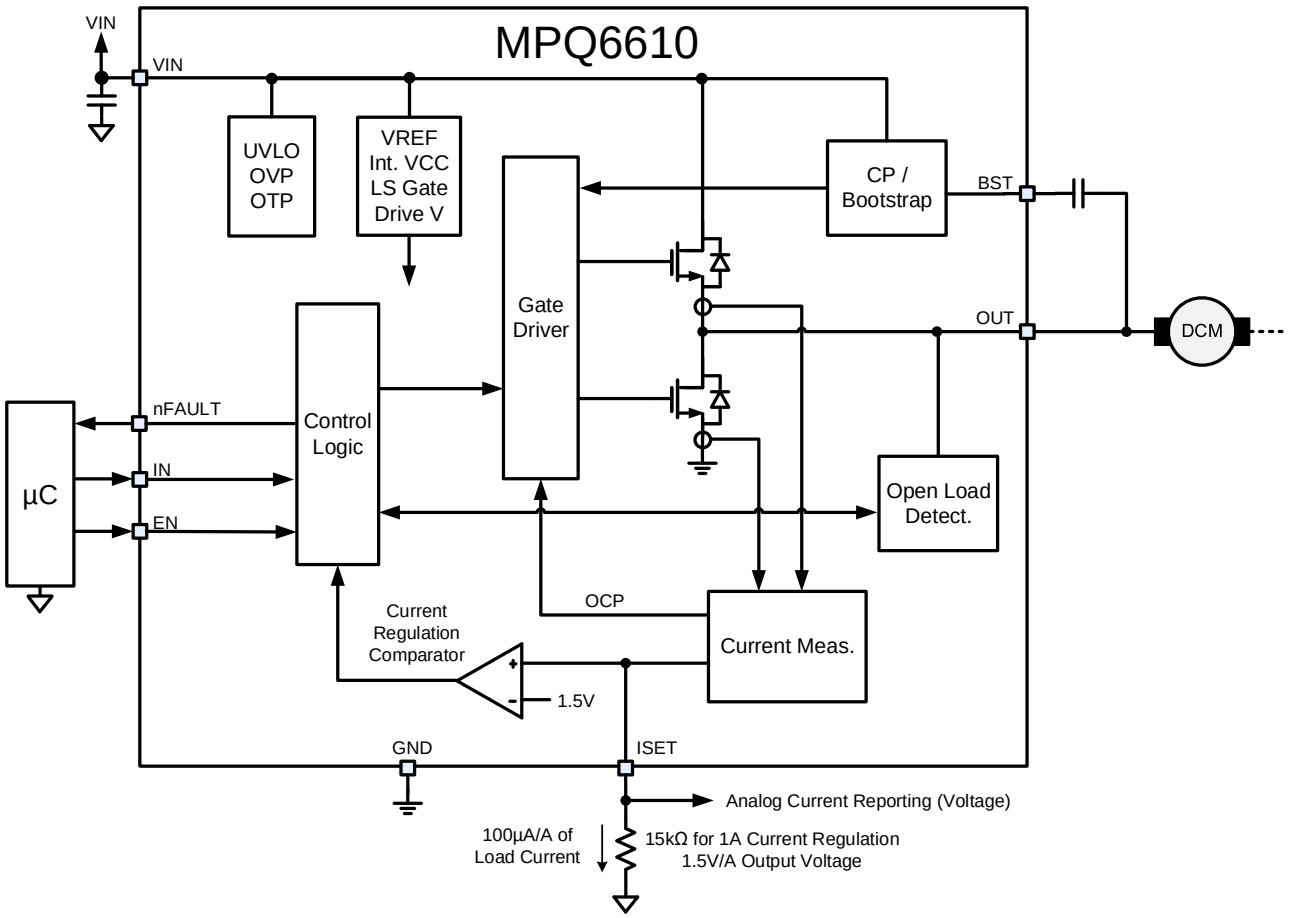

Figure 1: Functional Block Diagram

MPS Proprietary Information. Patent Protected. Unauthorized Photocopy and Duplication Prohibited.
© 2020 MPS. All Rights Reserved.

Downloaded from Arrow.com.

OPERATION

The MPQ6610 is a half-bridge driver that integrates two N-channel power MOSFETs with a 3A current capability (depending on the package, ambient temperature, and PCB design). The device operates across a wide 4V to 55V input voltage range. It is designed to drive brushed DC motors, solenoids, or other loads.

Current-Sense

The current flowing in the low-side MOSFET (LS-FET) or high-side MOSFET (HS-FET) is sensed with an internal current-sense circuit. A voltage that is proportional to the output current is sourced on the ISET pin.

The ISET pin voltage scaling is set by a resistor connected between the ISET pin and ground. For 1A of output current, 100µA of current is sourced into the resistor connected to ISET. For example, if a 10kΩ resistor is connected between ISET and ground, the output voltage on the ISET pin is 1V/A of output current.

The current is sensed anytime that either the LS-FET or HS-FET is on.

Current Limit and Regulation

The current in the output is limited using constant-off-time (COT) pulse-width modulation (PWM) control circuitry. Figure 2 shows the device's current regulation system, described below:

1. First, a MOSFET turns on and drives current through the load.
2. The current increases in the load, which is then sensed by the internal current-sense circuit.
3. If the load current reaches the current trip threshold, the output changes its state (if it was driving high, it goes low; if it was driving low, it goes high).
4. If the load current has fallen at 80% of the current limit threshold after a fixed off time (t_{ITRIP}), the original MOSFET is re-enabled. Then the cycle repeats.
5. If the current is still above this level, the off time is extended until the current falls to 80% of the current limit threshold.

The current limit threshold is reached when the ISET pin reaches 1.5V. For example, with a 10kΩ resistor connected from ISET to ground, the ISET pin voltage is 1V/A of output current. Therefore, when the current reaches 1.5A, the ISET pin voltage reaches 1.5V, and a current trip occurs.

Blanking Time

There is often a current spike while the MOSFET turns on, which can be caused by the body diode's reverse recovery current or by the shunt capacitance of the load. This current spike requires filtering to prevent it from erroneously shutting down the enabled MOSFET. An internal fixed blanking time (t_{BLANK}) blanks the output of the current-sense comparator when the output is switched. This blanking time also sets the minimum time for which the output remains high or low after the input has changed.

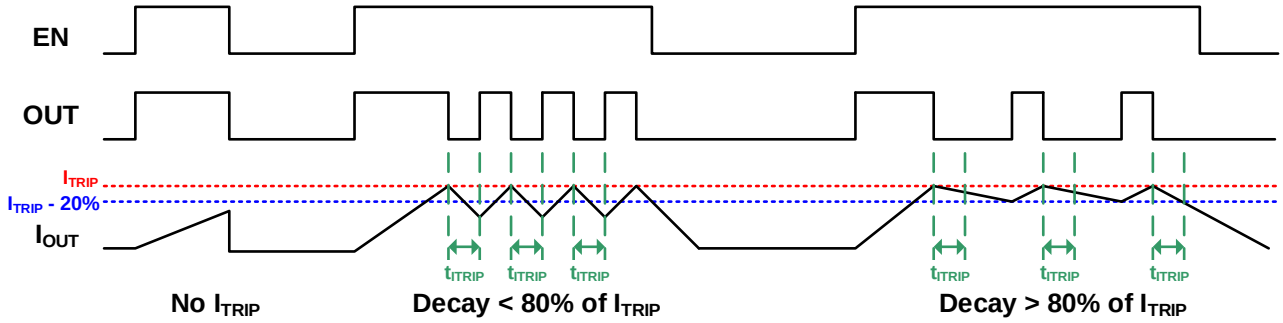

Figure 2: Current Regulation

MPS Proprietary Information. Patent Protected. Unauthorized Photocopy and Duplication Prohibited.
© 2020 MPS. All Rights Reserved.

Downloaded from Arrow.com.

Charge Pump and Bootstrap

To generate the high-side gate drive voltage for the internal N-channel high-side MOSFET (HS-FET), a bootstrap capacitor is used in conjunction with an internal trickle charge pump. The bootstrap capacitor provides the high peak current required to switch the MOSFET quickly, and the internal trickle charge pump keeps the bootstrap capacitor charged during long periods when the output is not switching.

Input Logic

Each MOSFET in the MPQ6610 is controlled independently using the IN and EN pins (see Table 1).

Table 1: Input Logic Table

EN	IN	OUT
0	0	Hi-Z
0	1	Hi-Z
1	0	Low
1	1	High

The input pins are designed such that they can be driven with a logic level voltage even when the main power to the device is inactive.

Protection and Diagnostic Functions

The MPQ6610 provides an nFAULT pin, which is driven active low if any of the protection circuits are activated. These fault conditions include over-current (OC) and over-temperature protection (OTP), as well as open-load detection. nFAULT is not driven low if a current limit trip occurs. nFAULT is an open-drain output, and requires an external pull-up resistor. When the fault condition is removed, the nFAULT pin is pulled inactive high by the pull-up resistor.

Over-Current Protection (OCP)

If the current through any MOSFET exceeds the over-current (OC) threshold for longer than the over-current deglitch time, an over-current fault is triggered.

If an OC fault occurs, the state of the output is reversed until the current approaches 0A. Then both MOSFETs are disabled, and the nFAULT pin is driven low. The driver remains disabled for about 1.6ms, then is automatically re-enabled.

OC conditions are sensed on both the high-side (HS) and low-side (LS) devices. OC conditions include a short to ground, to supply, or across the motor winding, which results in an over-current shutdown). Note that OCP does not use the same current-sense circuitry that is used for PWM current control, so it is independent of the ISET resistor value.

Open-Load Detection

When the output is in a high-impedance state (EN = 0), the internal circuits pull the OUT pin to V_{IN} / 2 by a weak current. If a load is connected between OUT and ground, then the load pulls the OUT pin close to ground. If a load is connected to VIN, then OUT is pulled close to the value on VIN.

If the voltage on OUT (V_{OUT}) is almost V_{IN} / 2, an open-load condition is detected, and the nFAULT pin is driven active low. The fault is cleared when EN is made active.

Input Under-Voltage Lockout (UVLO) Protection

If the voltage on VIN (V_{IN}) falls below the under-voltage lockout (UVLO) threshold at any time, all circuitry in the device is disabled and the internal logic is reset. Once V_{IN} exceeds the UVLO threshold, the MPQ6610 resumes normal operation.

Over-Voltage Protection (OVP)

If V_{IN} exceeds the over-voltage protection (OVP) threshold, the device is disabled. Once V_{IN} falls below the OVP threshold, the MPQ6610 resumes normal operation.

Thermal Shutdown

If the die temperature exceeds its safe limits, all MOSFETs in the H-bridge are disabled, and the nFAULT pin goes low. Once the die temperature drops to a safe level, the device automatically resumes normal operation.

MPS Proprietary Information. Patent Protected. Unauthorized Photocopy and Duplication Prohibited.
© 2020 MPS. All Rights Reserved.

Downloaded from Arrow.com.

PACKAGE INFORMATION

TSOT23-8

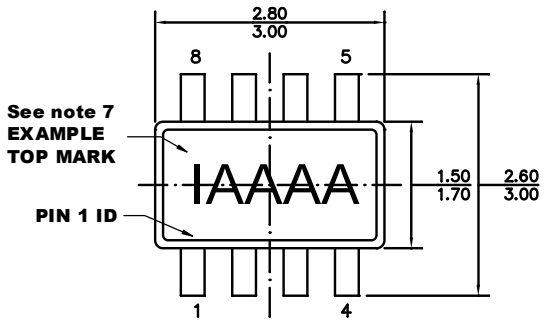

TOP VIEW

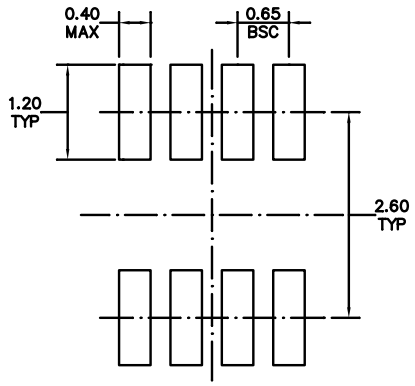

RECOMMENDED LAND PATTERN

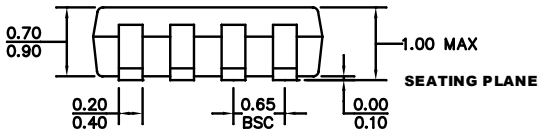

FRONT VIEW

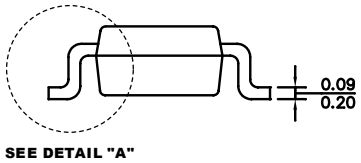

SIDE VIEW

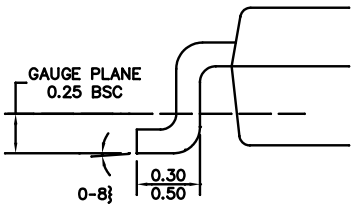

DETAIL "A"

NOTE:

1) ALL DIMENSIONS ARE IN MILLIMETERS.
2) PACKAGE LENGTH DOES NOT INCLUDE MOLD FLASH, PROTRUSION, OR GATE BURR.
3) PACKAGE WIDTH DOES NOT INCLUDE INTERLEAD FLASH OR PROTRUSION.
4) LEAD COPLANARITY (BOTTOM OF LEADS AFTER FORMING) SHALL BE 0.10 MILLIMETERS MAX.
5) JEDEC REFERENCE IS MO-193, VARIATION BA.
6) DRAWING IS NOT TO SCALE.
7) PIN 1 IS LOWER LEFT PIN WHEN READING TOP MARKING FROM LEFT TO RIGHT (SEE EXAMPLE TOP MARKING).

MPS Proprietary Information. Patent Protected. Unauthorized Photocopy and Duplication Prohibited.
© 2020 MPS. All Rights Reserved.

Downloaded from Arrow.com.

PACKAGE INFORMATION

SOIC-8

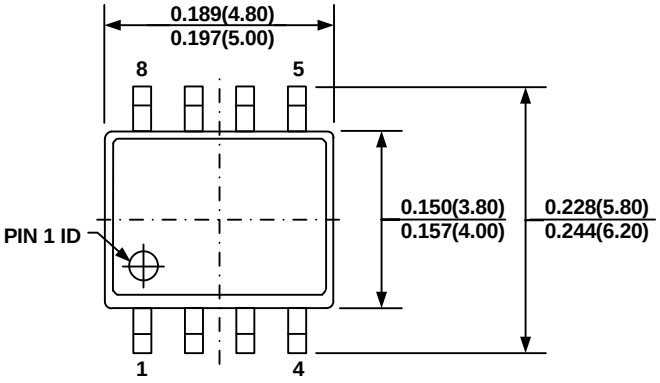

TOP VIEW

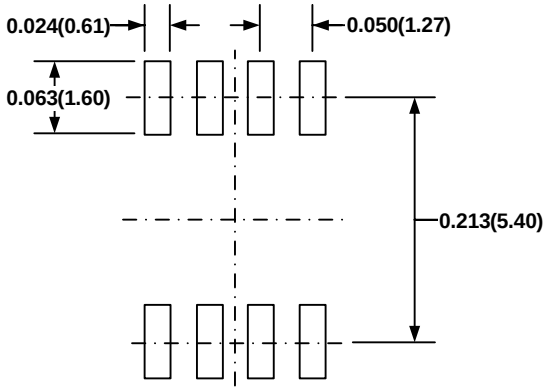

RECOMMENDED LAND PATTERN

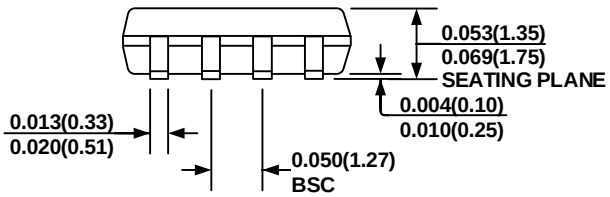

FRONT VIEW

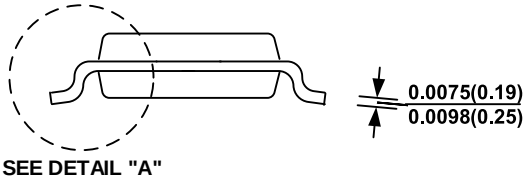

SIDE VIEW

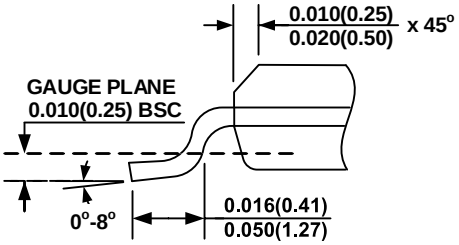

DETAIL "A"

NOTE:

1) CONTROL DIMENSION IS IN INCHES. DIMENSION IN BRACKET IS IN MILLIMETERS.
2) PACKAGE LENGTH DOES NOT INCLUDE MOLD FLASH, PROTRUSIONS OR GATE BURRS.
3) PACKAGE WIDTH DOES NOT INCLUDE INTERLEAD FLASH OR PROTRUSIONS.
4) LEAD COPLANARITY (BOTTOM OF LEADS AFTER FORMING) SHALL BE 0.004" INCHES MAX.
5) DRAWING CONFORMS TO JEDEC MS-012, VARIATION AA.
6) DRAWING IS NOT TO SCALE.

MPS Proprietary Information. Patent Protected. Unauthorized Photocopy and Duplication Prohibited.
© 2020 MPS. All Rights Reserved.

Downloaded from Arrow.com.

CARRIER INFORMATION

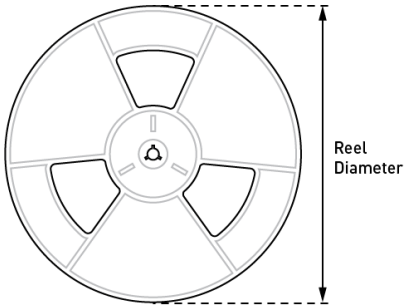

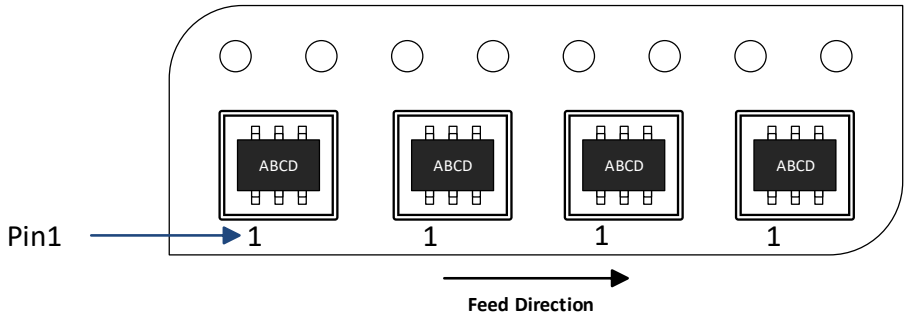

TSOT23-8

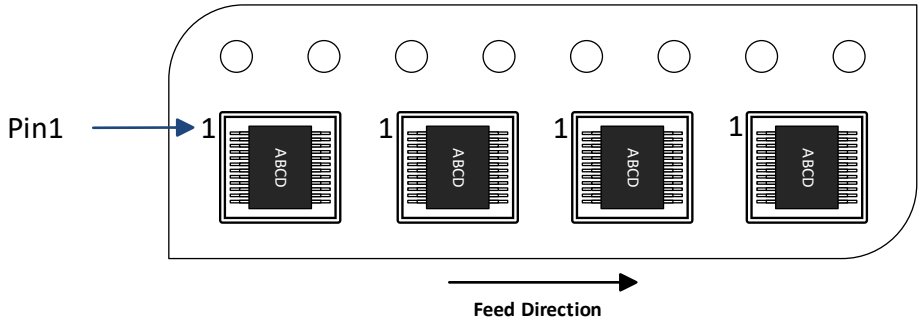

SOIC-8

Part Number	Package Description	Quantity/ Reel	Quantity/ Tube	Quantity/ Tray	Reel Diameter	Carrier Tape Width	Carrier Tape Pitch
MPQ6610GJ-AEC1–Z	TSOT23-8	3000	N/A	N/A	7in	8mm	4mm
MPQ6610GS-AEC1–Z	SOIC-8	2500	100	N/A	13in	12mm	8mm

MPS Proprietary Information. Patent Protected. Unauthorized Photocopy and Duplication Prohibited.
© 2020 MPS. All Rights Reserved.

Downloaded from Arrow.com.

Revision History

Revision #	Revision Date	Description	Pages Updated
1.0	11/20/2020	Initial Release	-

Notice: The information in this document is subject to change without notice. Users should warrant and guarantee that third-party Intellectual Property rights are not infringed upon when integrating MPS products into any application. MPS will not assume any legal responsibility for any said applications.

© 2020 MPS. All Rights Reserved.

Downloaded from Arrow.com.