PRODUCT NUMBER: 110-43-324-41-001000

www.mill-max.com
DATA SHEET

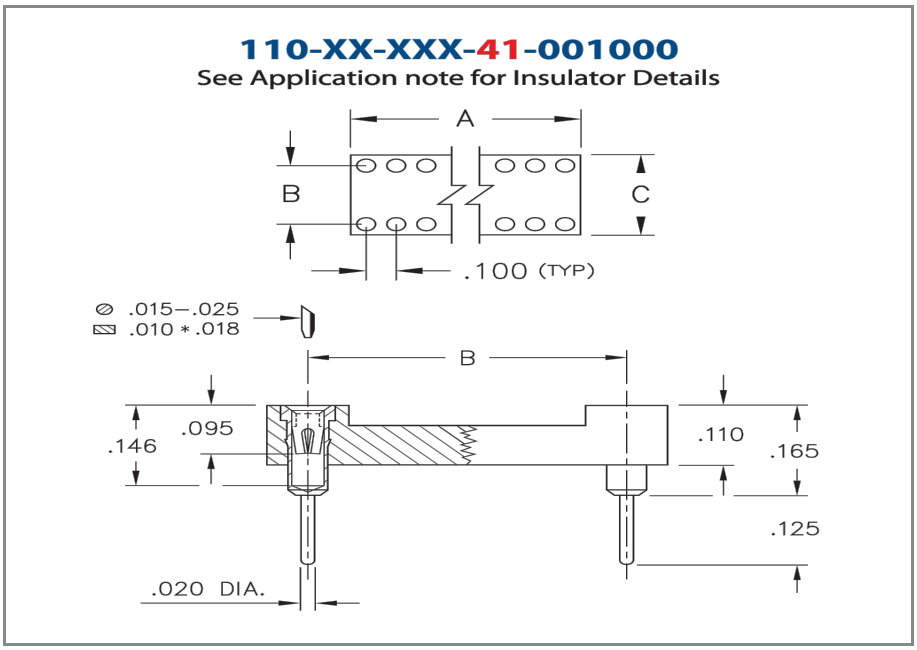

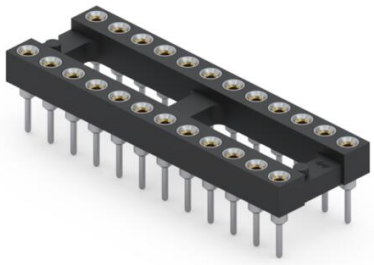

General Information		
1	**Product Lifecycle:**	Active
	Product Family:	IC Socket
	Type:	Dual In Line Socket
2	**Description:**	Standard Solder Tail DIP Socket
	Pitch:	.100" (2,540mm)
	Number of Pins:	24
	Head Type:	N/A
	Tail Type:	Solder Tail
3	**Operating Temperature Range:**	-55/+125° C
	Country of Origin:	USA
4	**ROHS:**	Yes

Downloaded from Arrow.com.

110-43-324-41-001000 - SPECIFICATIONS

Product Attributes	
5 Plating Code:	43 - shell: 200 µ" Tin (matte finish) over 100 µ" Nickel - inner contact: 30 µ" Gold over 50 µ" Nickel
Insulator Material:	High Temp Thermoplastic
Rows:	N/A
Frame Type:	Open Frame
6 Contact Number:	30 - Standard 4 Finger Contact
Mounting Tab:	N/A

Key Dimensions	
Accepting Lead Range:	.015"-.025" (0,381-0,635mm)
Above Board Height:	.165" (4,191mm)
Insulator Height:	.110" (2,794mm)
Tail Diameter:	.020" (0,508mm)
Tail Length:	.125" (3,175mm)
A Dim:	1.200" (30,480mm)
B Dim:	.300" (7,620mm)
C Dim:	.400" (10,160mm)

Electrical Specifications	
7 Current Rating:	3 Amps
Contact Resistance:	10.00mΩ Max
Insulation Resistance:	10,000 MΩ min.
Rated Voltage:	100 VRMS/150 VDC
Dielectric Withstanding Voltage:	1,000 VRMS min.

Mechanical Specifications	
8 Mechanical life (Durability):	1,000 Cycles Minimum
9 Shock:	No Elect. Discontinuity > 1µs @ 50g
10 Vibration:	No Elect. Discontinuity > 1µs @ 10-2000HZ, 15 G

Downloaded from Arrow.com.

Mounting Specifications	
Mounting Type:	Through Hole Solder Mount
Mounting Hole:	.028" (0,711mm)
Mounting Tab:	N/A
SMT Pad Size:	N/A

Packaging Information	
Packaging:	Tube
Tape Width:	N/A
Quantity Per Tube:	16

Environmental & Export Classifications	
REACH Status:	REACH Unaffected
ECCN:	Contact Factory
HTSUS:	8536.90.4040
Cage Code:	3N087
Moisture Sensitivity Level (MSL):	1 (Unlimited)
Special Handling Code:	UNDF
Prop 65:	N
Static Sensitive:	N

Downloaded from Arrow.com.

NOTES:

1. Part is Active and in Production, No Scheduled Obsolescence
2. Standard Tolerances:
   Assembly tolerance: +/-.010" (.25mm)
   Insulator length: +/-.005 (.13mm)
   Insulator width: +/-.005 (.13mm)
   Insulator height: +/-.005 (.13mm)
   Pin Length: +/-.005 (.13mm)
   Pin Diameter: +/-.002 (.051mm)
   Pin Angle: +/-2°
   Co-planarity of SMT connectors: .005" (.13mm) up to 1" (25.4mm) in connector length
   Insulator Flatness: .005" (.13mm) up to 1" (25.4mm) in connector length
3. Per IEC 60512-11-(4,-9,-10,-12)
4. Mill-Max products labeled with the RoHS symbol are compliant with all three ROHS Directives. All of our products previously described as RoHS (2002/95/EC) and RoHS-2 (2011/65/EC) are also compliant with RoHS-3 (2015/863/EU).
5. **Shell Plating:** 200 µ" Tin (matte finish) over 100 µ" Nickel
   Contact/Clip Plating: 30 µ" Gold over 50 µ" Nickel
6. Click the Link for Insertion/Extraction Force & Current/Temperature Derating Graphs
7. Per IEC 60512-5-1, Current Carrying Capacity (evaluated at 10° C Temp. Rise)
8. Receptacles are capable of 1,000 Minimum insertion/extraction cycles for a broad range of applications. Mating pin size, shape and finish, along with application specific variables, will affect the life of a receptacle contact.
9. For discrete pin only. Per IEC 60512-6-3: Test 6c: Shock
10. For discrete pin only. Per IEC 60512-6-4: Test 6d: Vibration (sinusoidal)

ADDITIONAL NOTES AND SPECIFICATIONS

In the interest of improved design, quality and performance , Mill-Max reserves the right to make changes in its specifications without prior notice. Specifications and tolerances are provided wherever possible. The tolerance on dimensions of critical to function features is typically held tighter than the stated standard tolerances, such as press-fits, holes and lengths affecting the coplanarity of SMT products. Due to the wide variety of interconnects Mill-Max offers, the specific tolerances vary from product to product. If you need information regarding the tolerance of a particular part, please contact Technical Services.

RELATED LINKS AND DOCUMENTS

- Product Detail: 110-43-324-41-001000 - Standard Solder Tail
- **DIP Insulator Information**
- Environmental Compliance: https://www.mill-max.com/rohs

Downloaded from Arrow.com.