Please note that Cypress is an Infineon Technologies Company.

The document following this cover page is marked as “Cypress” document as this is the company that originally developed the product. Please note that Infineon will continue to offer the product to new and existing customers as part of the Infineon product portfolio.

Continuity of document content

The fact that Infineon offers the following product as part of the Infineon product portfolio does not lead to any changes to this document. Future revisions will occur when appropriate, and any changes will be set out on the document history page.

Continuity of ordering part numbers

Infineon continues to support existing part numbers. Please continue to use the ordering part numbers listed in the datasheet for ordering.

www.infineon.com

Downloaded from Arrow.com.

CYBT-343026-01

EZ-BT™ WICED® Module

General Description

The CYBT-343026-01 is a fully integrated Bluetooth® Smart Ready wireless module. The CYBT-343026-01 includes an onboard crystal oscillator, passive components, flash memory, and the Cypress CYW20706 silicon device. Refer to the CYW20706 datasheet for additional details on the capabilities of the silicon device used in this module.

The CYBT-343026-01 supports peripheral functions (ADC and PWM), UART, I^2C, and SPI communication, and a PCM/I^2S audio interface. The CYBT-343026-01 includes a royalty-free Bluetooth stack compatible with Bluetooth 5.0 in a 12.0 × 15.5 × 1.95 mm package.

The CYBT-343026-01 includes 512 KB of onboard serial flash memory and is designed for standalone operation. The CYBT-343026-01 uses an integrated power amplifier to achieve Class I or Class II output power capability.

The CYBT-343026-01 is fully qualified by Bluetooth SIG and is targeted at applications requiring cost-optimized Bluetooth wireless connectivity.

Module Description

Module size: 12.00 mm × 15.50 mm × 1.95 mm

Bluetooth 5.0 Qualified Smart Ready module
- QDID: 164447
- Declaration ID: D054216

Certified to FCC, ISED, MIC, SRRC, KC, NCC, ANATEL, and CE regulations

Castelated solder pad connections for ease-of-use

512-KB on-module serial flash memory

Up to 11 GPIOs

Temperature range: –30 °C to +85 °C

Cortex-M3 32-bit processor

Maximum TX output power
- +12 dbm for Bluetooth Classic
- +9 dBm for Bluetooth Low Energy
- Bluetooth LE connection range of up to 250 meters at 9 dBm[1]

RX Receive Sensitivity:
- Bluetooth Classic:
  - –93.5 dBm at 1 Mbps, GFSK
  - –95.5 dBm at 2 Mbps, π/4-DQPSK
  - –89.5 dBm at 3 Mbps, 8-DPSK
- –96.5 dBm for Bluetooth Low Energy

Power Consumption

Enhanced Data Rate (EDR) at 8 dBm
- Peak TX current: 52.5 mA
- Peak RX current consumption: 26.4 mA

Bluetooth Low Energy at 0 dBm
- 1-second interval Bluetooth LE ADV average current consumption: 315 µA

Low power mode support
- Deep Sleep: 2.69 µA

Functional Capabilities

Σ-Δ ADC for audio (12 bits) and DC measurement (10 bits)

Serial Communications interface compatible with I^2C slaves

Serial Peripheral Interface (SPI) support for both master and slave modes

HCI interface through UART

PCM/I^2S Audio interface

Two-wire Global Coexistence Interface (GCI)

Integrated peripherals such as PWM, ADC

Programmable output power control

Supports extended synchronous connections (eSCO), for enhanced voice quality by allowing for retransmission of dropped packets

Bluetooth wideband speech support

Benefits

CYBT-343026-01 provides all necessary components required to operate Bluetooth LE and/or BR/EDR communication standards.

Proven ready-to-use hardware design

Dual-mode operation eliminates the need for multiple modules

Cost optimized for applications without space constraints

Nonvolatile memory for self-sufficient operation and over-the-air updates

Bluetooth SIG listed with QDID and Declaration ID

Fully certified module eliminates the time needed for design, development, and certification processes

WICED® Studio provides an easy-to-use integrated design environment (IDE) to configure, develop, and program a Bluetooth application

Note

1. Connection range tested module-to-module in full line-of-sight environment, free of obstacles or interference sources with output power of +9.0 dBm. Actual range will vary based on end product design, environment, receive sensitivity and transmit output power of the central device.

Downloaded from Arrow.com.

More Information

Cypress provides a wealth of data at www.cypress.com to help you to select the right module for your design, and to help you to quickly and effectively integrate the module into your design.

References

Overview: EZ-BLE/BT Module Portfolio, Module Roadmap

CYW20706 BT Silicon Datasheet

Development Kits:

CYBT-343026-EVAL, CYBT-343026-01 Evaluation Board

Test and Debug Tools:

CYSmart, Bluetooth® LE Test and Debug Tool (Windows)

CYSmart Mobile, Bluetooth® LE Test and Debug Tool (Android/iOS Mobile App)

Knowledge Base Article

KBA97095 - EZ-BLE™ Module Placement

KBA213260- RF Regulatory Certifications for CYBT-343026-01 EZ-BT™ WICED Modules

KBA213976 - FAQ for BLE and Regulatory Certifications with EZ-BLE modules

KBA210802 - Queries on BLE Qualification and Declaration Processes

KBA218122 - 3D Model Files for EZ-BLE/EZ-BT Modules

KBA221025 - Platform Files for CYBT-343026-EVAL

KBA223428 - Programming an EZ-BT WICED Module

Development Environments

Wireless Connectivity for Embedded Devices (WICED) Studio Software Development Kit (SDK)

Cypress' WICED® is a full-featured platform with proven Software Development Kits (SDKs) and turnkey hardware solutions from partners to readily enable Wi-Fi and Bluetooth® connectivity in system design.

WICED Studio is the only SDK for the Internet of Things (IoT) that combines Wi-Fi and Bluetooth into a single integrated development environment. In addition to providing WICED APIs and an application framework designed to abstract complexity, WICED Studio also leverages many common industry standards.

Technical Support

Cypress Community: Whether you are a customer, partner, or a developer interested in the latest Cypress innovations, the Cypress Developer Community offers you a place to learn, share, and engage with both Cypress experts and other embedded engineers around the world.

Frequently Asked Questions (FAQs): Learn more about our Bluetooth ecosystem.

Visit our support page and create a technical support case or contact a local sales representatives. If you are in the United States, you can talk to our technical support team by calling our toll-free number: +1-800-541-4736. Select option 2 at the prompt.

Downloaded from Arrow.com.

Contents

Overview **4**
Functional Block Diagram 4
Module Description 4
Pad Connection Interface **6**
Recommended Host PCB Layout **7**
Module Connections **9**
Connections and Optional External Components **10**
Power Connections (VDDIN) 10
External Reset (XRES) 10
Multiple-Bonded GPIO Connections 11
Critical Components List 13
Antenna Design 13
Functional Description **14**
Bluetooth Baseband Core 14
Microcontroller Unit 16
External Reset (XRES) 17
Integrated Radio Transceiver **18**
Transmitter Path 18
Receiver Path 18
Local Oscillator Generation 18
Calibration 18
Internal LDO 19
Collaborative Coexistence **19**
Global Coexistence Interface **19**
SECI I/O 19
Peripheral and Communication Interfaces **20**
I2C Communication Interface 20
HCI UART Interface 20
Peripheral UART Interface 21
Serial Peripheral Interface 21
PCM Interface 21
Clock Frequencies **22**
GPIO Port **22**
PWM **22**
Power Management Unit **24**
RF Power Management 24
Host Controller Power Management 24
BBC Power Management 24
Electrical Characteristics **25**
Chipset RF Specifications **27**
Timing and AC Characteristics **30**
UART Timing 30
SPI Timing 31
I2C Interface Timing 33
PCM Interface Timing 34
I2S Interface Timing 38
Environmental Specifications **41**
Environmental Compliance 41
RF Certification 41
Safety Certification 41
Environmental Conditions 41
ESD and EMI Protection 41
Regulatory Information **42**
FCC 42
ISED 43
European Declaration of Conformity 44
MIC Japan 44
China 44
KC Korea 45
NCC Taiwan 45
Anatel Brazil 46
Packaging **47**
Ordering Information **49**
Acronyms **50**
Document Conventions **52**
Units of Measure 52
Document History Page **53**
Sales, Solutions, and Legal Information **54**
Worldwide Sales and Design Support 54
Products 54
PSoC® Solutions 54
Cypress Developer Community 54
Technical Support 54

Downloaded from Arrow.com.

Overview

Functional Block Diagram

Figure 1 illustrates the CYBT-343026-01 functional block diagram.

Figure 1. Functional Block Diagram (GPIOs)

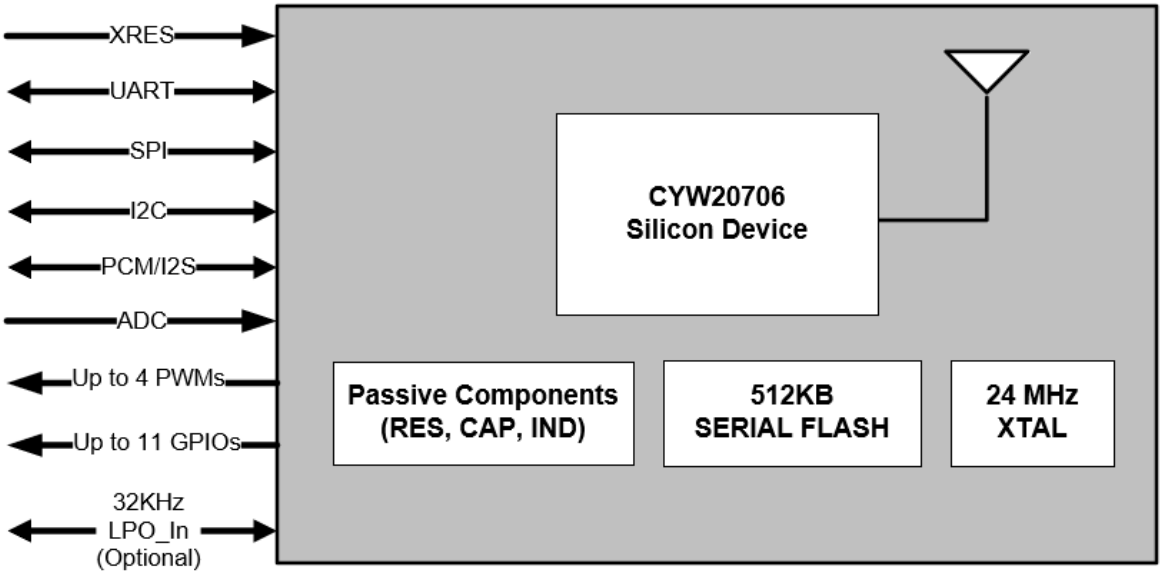

Module Description

The CYBT-343026-01 module is a complete module designed to be soldered to the application's main board.

Module Dimensions and Drawing

Cypress reserves the right to select components from various vendors to achieve the Bluetooth module functionality. Such selections will still guarantee that all mechanical specifications and module certifications are maintained. Designs should be held within the physical dimensions shown in the mechanical drawings in Figure 2 on page 5. All dimensions are in millimeters (mm).

Table 1. Module Design Dimensions

Dimension Item		Specification
Module dimensions	Length (X)	12.00 ± 0.15 mm
	Width (Y)	15.50 ± 0.15 mm
Antenna connection location dimensions	Length (X)	12.0 mm
	Width (Y)	4.62 mm
PCB thickness	Height (H)	0.50 ± 0.05 mm
Shield height	Height (H)	1.45-mm typical
Maximum component height	Height (H)	1.45-mm typical
Total module thickness (bottom of module to highest component)	Height (H)	1.95-mm typical

See Figure 2 for the mechanical reference drawing for CYBT-343026-01.

Downloaded from Arrow.com.

Figure 2. Module Mechanical Drawing

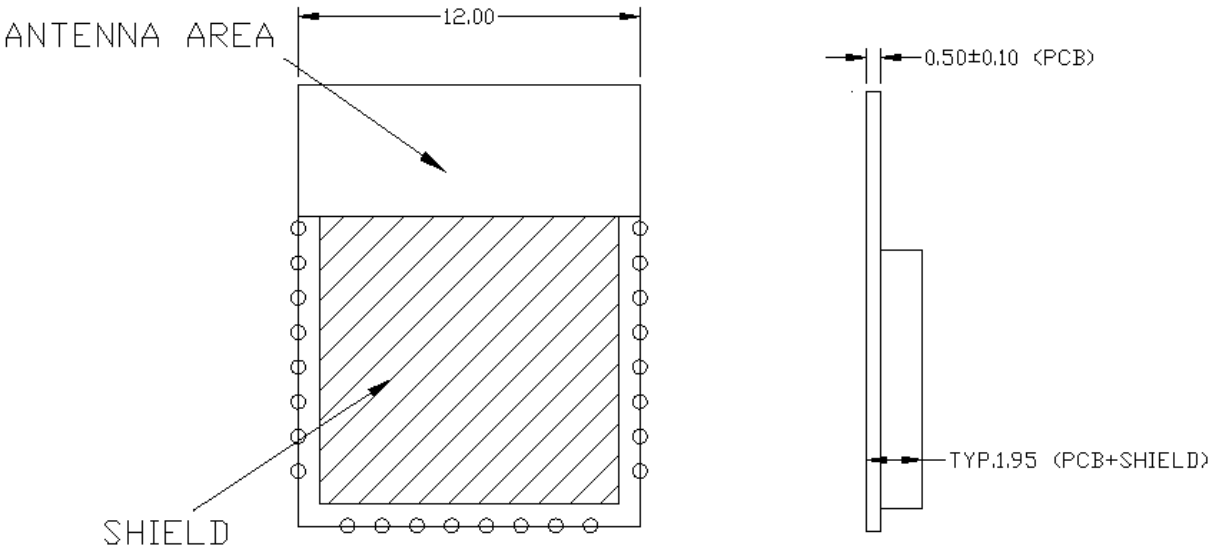

Side View

Top View (Seen from Top)

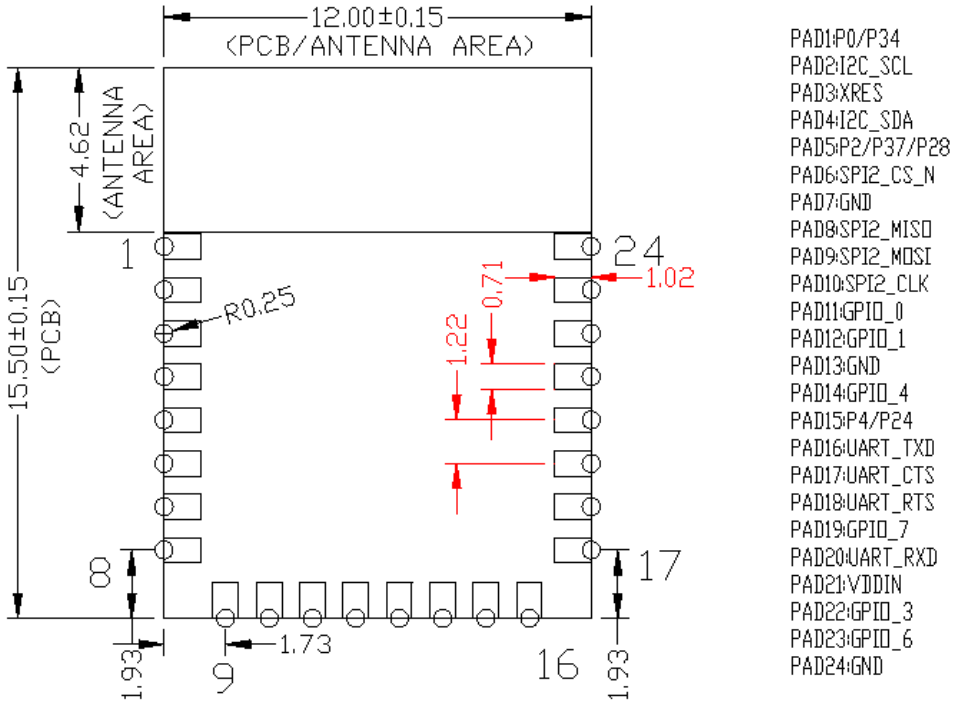

Bottom View

Notes

2. No metal should be located beneath or above the antenna area. Only bare PCB material should be located beneath the antenna area. For more information on recommended host PCB layout, see "Recommended Host PCB Layout" on page 7.
3. The CYBT-343026-01 includes castellated pad connections, denoted as the circular openings at the pad location above.

Downloaded from Arrow.com.

Pad Connection Interface

As shown in the bottom view of Figure 2 on page 5, the CYBT-343026-01 connects to the host board via solder pads on the backside of the module. Table 2 and Figure 3 detail the solder pad length, width, and pitch dimensions of the CYBT-343026-01 module.

Table 2. Connection Description

Name	Connections	Connection Type	Pad Length Dimension	Pad Width Dimension	Pad Pitch
SP	24	Solder Pads	1.02 mm	0.71 mm	1.22 mm

Figure 3. Solder Pad Dimensions (Seen from Bottom

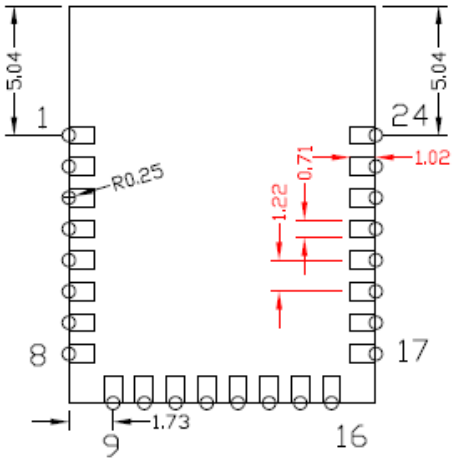

To maximize RF performance, the host layout should follow these recommendations:

1. Antenna Area Keepout: The host board directly below the antenna area of the Cypress module (see Figure 2 on page 5) must not contain ground or signal traces. This keepout area requirement applies to all layers of the host board.
2. Module Placement: The ideal placement of the Cypress Bluetooth module is in a corner of the host board with the PCB trace antenna located at the far corner. This placement minimizes the additional recommended keepout area stated in item 2. Refer to AN96841 for module placement best practices.

Figure 4. Recommended Host PCB Keepout Area Around the CYBT-343026-01 Antenna

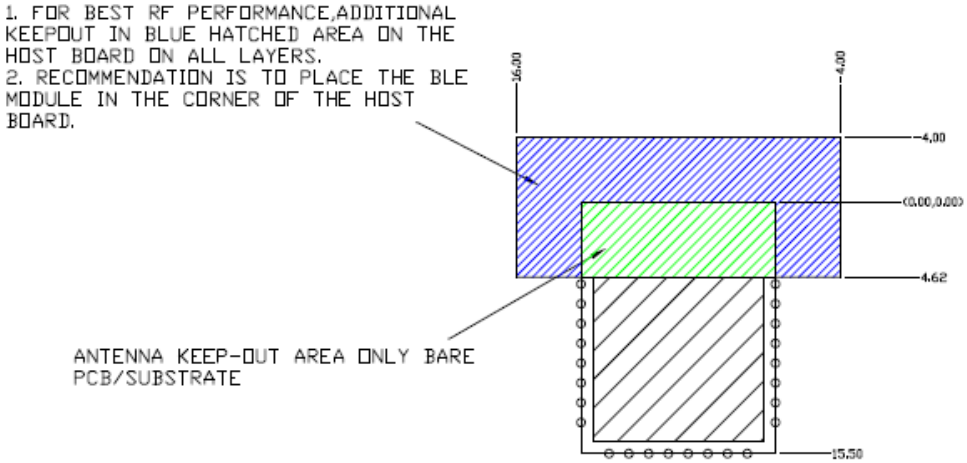

Downloaded from Arrow.com.

Recommended Host PCB Layout

Figure 5, Figure 6, Figure 7, and Table 3 provide details that can be used for the recommended host PCB layout pattern for the CYBT-343026-01. Dimensions are in millimeters unless otherwise noted. Pad length of 1.27 mm (0.635 mm from center of the pad on either side) shown in Figure 7 is the minimum recommended host pad length. The host PCB layout pattern can be completed using either Figure 5, Figure 6, or Figure 7. It is not necessary to use all figures to complete the host PCB layout pattern.

Figure 5. CYBT-343026-01 Host Layout (Dimensioned)

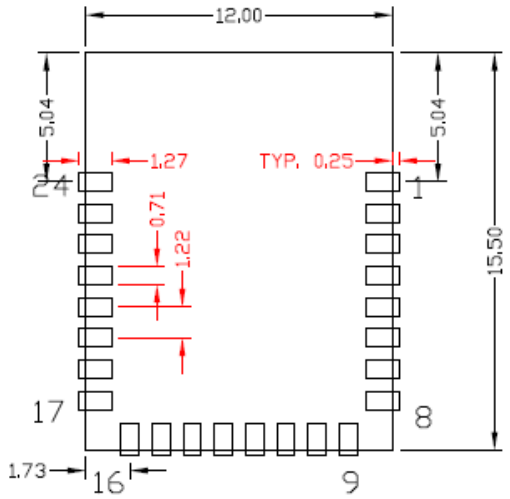

Top View (Seen on Host PCB)

Figure 6. CYBT-343026-01 Host Layout (Relative to Origin)

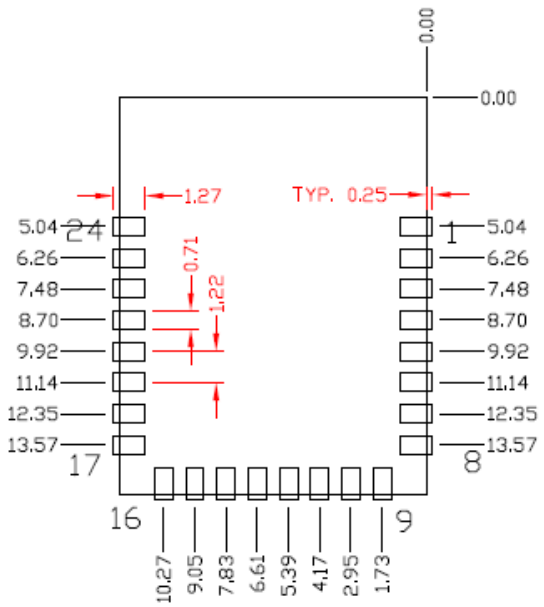

Top View (Seen on Host PCB)

Downloaded from Arrow.com.

Table 3 provides the center location for each solder pad on the CYBT-343026-01. All dimensions are referenced to the center of the solder pad. Refer to Figure 7 for the location of each module solder pad.

Table 3. Module Solder Pad Location

Solder Pad (Center of Pad)	Location (X,Y) from Orign (mm)	Dimension from Orign (mils)
1	(0.38, 5.04)	(14.96, 198.42)
2	(0.38, 6.26)	(14.96, 246.46)
3	(0.38, 7.48)	(14.96, 294.49)
4	(0.38, 8.70)	(14.96, 342.52)
5	(0.38, 9.92)	(14.96, 390.55)
6	(0.38, 11.14)	(14.96, 438.58)
7	(0.38, 12.35)	(14.96, 486.22)
8	(0.38, 13.57)	(14.96, 534.25)
9	(1.73, 15.11)	(68.11, 594.88)
10	(2.95, 15.11)	(116.14, 594.88)
11	(4.17, 15.11)	(164.17, 594.88)
12	(5.39, 15.11)	(212.20, 594.88)
13	(6.61, 15.11)	(260.24, 594.88)
14	(7.83, 15.11)	(308.27, 594.88)
15	(9.05, 15.11)	(356.30, 594.88)
16	(10.27, 15.11)	(404.33, 594.88)
17	(11.62, 13.57)	(457.48, 534.25)
18	(11.62, 12.35)	(457.48, 486.22)
19	(11.62, 11.14)	(457.48, 438.58)
20	(11.62, 9.92)	(457.48, 390.55)
21	(11.62, 8.70)	(457.48, 342.52)
22	(11.62, 7.48)	(457.48, 294.49)
23	(11.62, 6.26)	(457.48, 246.46)
24	(11.62, 5.04)	(457.48, 198.42)

Figure 7. Solder Pad Reference Location

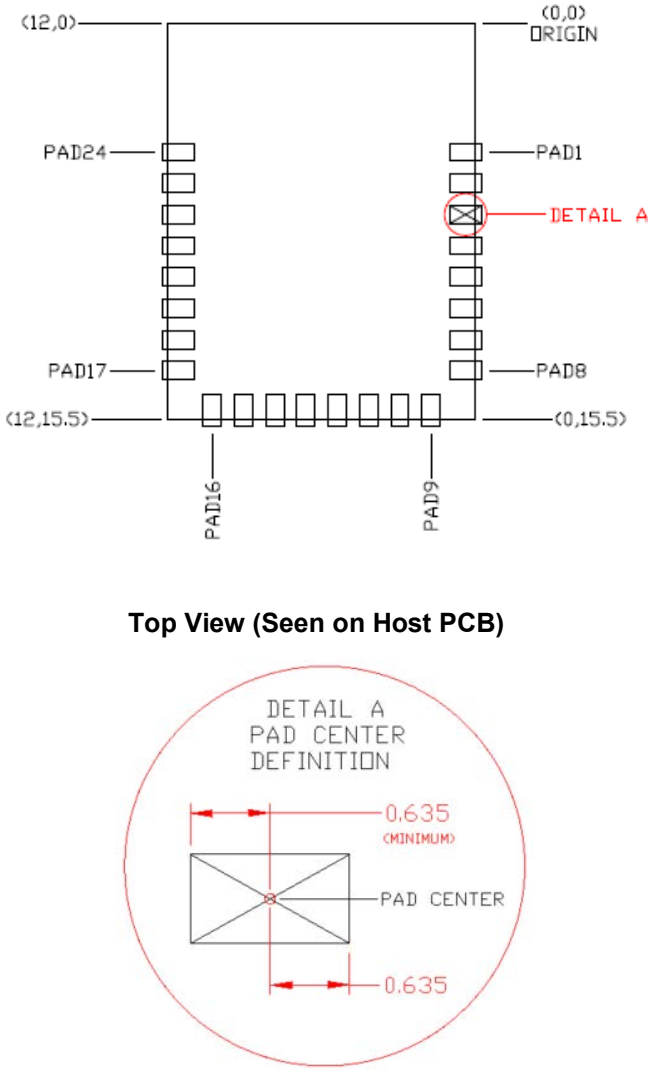

Downloaded from Arrow.com.

Module Connections

Table 4 details the solder pad connection definitions and available functions for the pad connections for the CYBT-343026-01 module. Table 4 lists the solder pads on the CYBT-343026-01 module, the silicon device pin, and denotes what functions are available for each solder pad.

Table 4. CYBT-343026-01 Solder Pad Connection Definitions

Pad	Pad Name	Silicon Pin Name	Silicon Port-Pin Name	UART	SPI[4,5]	I2C	ADC	COEX	CLK/ XTAL	GPIO	Other
1	P0/P34	C8	PCM_Sync/ I2S_WS/P0/P34	PUART_TX/P0 PUART_RX/P34	SPI1_MOSI/P0 (master/slave)		IN29/P0 IN5/P34				PCM_Sync I2S_WS
2	I2C_SCL	A8	I2S_DO/ PCM_Out/P3/ P29/P35	PUART_CTS/ P3 or P35	SPI1_CLK/P3 (master/slave)	SCL SDA/ P35	IN4/P35 IN10/29			(P3/P29 /P35)	I2S_DO PCM_Out PWM3 (P29)
3	XRES	RESET _N	RESET_N	External Reset (Active Low)							
4	I2C_SDA	C7	PCM_IN/ I2S_DI/P12			SDA	IN23/P12			(P12)	PCM_IN I2S_DI
5	P2/P37/P28	B7	PCM_CLK/ I2S_CLK/P2/ P28/P37	PUART_RX/P2	SPI1_CS(slave)/P2 SPI1_MOSI(master)/P2 SPI1_MISO(slave)/P37	SCL/ P37	IN11/P28 IN2/P37		ACLK1 /P37		PWM2 (P28) I2S_CLK PCM_CLK
6	SPI2_CS_N	D7	N/A	No Connect (Used for on-module memory SPI interface for CYBT-343026-01)							
7	GND	GND	GND	Ground							
8	SPI2_MISO	D8	N/A	No Connect (Used for on-module memory SPI interface for CYBT-343026-01)							
9	SPI2_MOSI	E8	N/A	No Connect (Used for on-module memory SPI interface for CYBT-343026-01)							
10	SPI2_CLK	E7	N/A	No Connect (Used for on-module memory SPI interface for CYBT-343026-01)							
11	GPIO_0	F8	BT_GPIO_0/ P36/P38		SPI1_CLK/P36 SPI1_MOSI/P38 (master/slave)		IN3/P36 IN1/P38		ACLK0 /P36	(DevWa ke)	
12	GPIO_1	F7	BT_GPIO_1/ P25/P32	PUART_RX/P25 PUART_TX/P32	SPI1_MISO/P25 (master/slave) SPI1_CS/P32 (slave)		IN7/P32		ACLK0 /P32	(HostWa ke)	
13	GND	GND	GND	Ground							
14	GPIO_4	D6	BT_GPIO_4/P6/ P31/LPO_IN	PUART_RTS/P6 PUART_TX/P31	SPI1_CS/P6 (slave)		IN8/P31				Ext LPO In
15	P4/P24	G8	BT_CLK_REQ/ P4/P24	PUART_RX/P4 PUART_TX/P24	SPI1_MOSI/P4 (master/slave) SPI1_CLK/P24 (master/slave)					(CLK_R EQ)	
16	UART_TXD	F4	BT_UART_TXD	HCI UART Transmit Data							
17	UART_CTS	G4	BT_UART_CTS	HCI UART Clear To Send Input							
18	UART_RTS	F3	BT_UART_RTS	HCI UART Request To Send Output							
19	GPIO_7	C6	BT_GPIO_7/ P30	PUART_RTS/ P30			IN9/P30	(GCI_SE CI_OUT)			
20	UART_RXD	F5	BT_UART_RXD	HCI UART Receive Data							
21	VDDIN	G1	VDDIN	VDDIN (2.3V ~ 3.6V)							
22	GPIO_3	C5	BT_GPIO_3/ P27/P33	PUART_RX/P33	SPI1_MOSI/P27 (master/slave) SPI1_MOSI/P33 (slave)		IN6/P33		ACLK1 /P33		PWM1 (P27)
23	GPIO_6	B6	BT_GPIO_6/ P11/P26		SPI1_CS/P26 (slave)		IN24/P11	(GCI_SE CI_IN)			PWM0 (P26)
24	GND	GND	GND	Ground							

Notes

4. The CYBT-343026-01 contains a single SPI (SPI1) peripheral supporting both master or slave configurations. SPI2 is used for on-module serial memory interface.
5. In Master mode, any available GPIO can be configured as SPI1_CS. This function is not explicitly shown in Table 4.

Downloaded from Arrow.com.

Connections and Optional External Components

Power Connections (VDDIN)

The CYBT-343026-01 contains one power supply connection, VDDIN, which accepts a supply input range of 2.3 V to 3.6 V for CYBT-343026-01. Table 11 provides this specification. The maximum power supply ripple for this power connection is 100 mV, as shown in Table 11.

It is not required to place any power supply decoupling or noise reduction circuitry on the host PCB. If desired, an external ferrite bead between the supply and the module connection can be included, but is not necessary. If used, the ferrite bead should be positioned as close as possible to the module pin connection and the recommended ferrite bead value is 330 Ω, 100 MHz.

Considerations and Optional Components for Brown Out (BO) Conditions

Power supply design must be completed to ensure that the CYBT-343026-01 module does not encounter a Brown Out condition, which can lead to unexpected functionality, or module lock up. A Brown Out condition may be met if power supply provided to the module during power up or reset is in the following range:

$$V_{IL} \leq VDDIN \leq V_{IH}$$

Refer to Table 12 for the V_{IL} and V_{IH} specifications.

System design should ensure that the condition above is not encountered when power is removed from the system. In the event that this cannot be guaranteed (that is, battery installation, high-value power capacitors with slow discharge), it is recommended that an external voltage detection device be used to prevent the Brown Out voltage range from occurring during power removal. Refer to Figure 8 for the recommended circuit design when using an external voltage detection IC.

Figure 8. Reference Circuit Block Diagram for External Voltage Detection IC

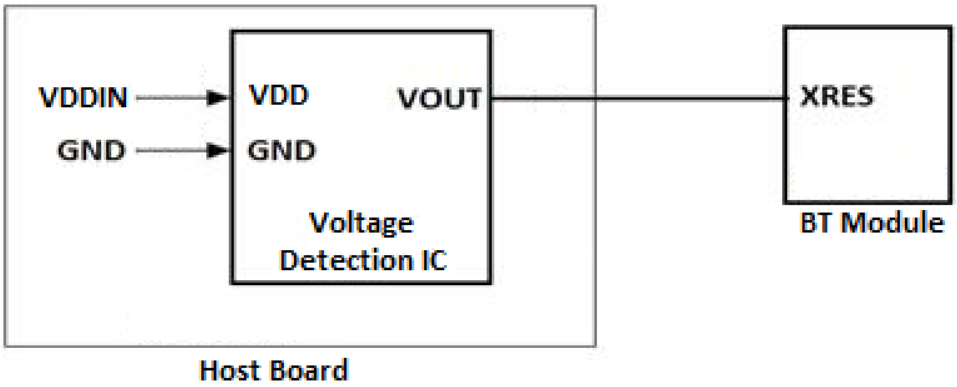

In the event that the module does encounter a Brown Out condition, and is operating erratically or is not responsive, power cycling the module will correct this issue and once reset, the module should operate correctly. Brown Out conditions can potentially cause issues that cannot be corrected, but in general, a power-on-reset operation will correct a Brown Out condition.

External Reset (XRES)

The CYBT-343026-01 has an integrated power-on reset circuit, which completely resets all circuits to a known power-on state. This action can also be evoked by an external reset signal, forcing it into a power-on reset state. The XRES signal is an active-low signal, which is an input to the CYBT-343026-01 module (solder pad 3). The CYBT-343026-01 module does not require an external pull-up resistor on the XRES input

During power-on operation, the XRES connection to the CYBT-343026-01 is required to be held low 50 ms after the VDD power supply input to the module is stable. This can be accomplished in the following ways:

The host device should connect a GPIO to the XRES of the Cypress CYBT-343026-01 module and pull XRES low until VDD is stable. XRES is recommended to be released 50 ms after VDDIN is stable.

If the XRES connection of the CYBT-343026-01 module is not used in the application, a 10-µF capacitor may be connected to the XRES solder pad of the CYBT-343026-01 to delay the XRES release. The capacitor value for this recommended implementation is approximate, and the exact value may differ depending on the VDDIN power supply ramp time of the system. The capacitor value should result in an XRES release timing of 50 ms after VDDIN stability.

The XRES release timing may be controlled by an external voltage detection IC. XRES should be released 50 ms after VDD is stable.

Refer to Figure 11 on page 17 for XRES operating and timing requirements during power-on events.

Downloaded from Arrow.com.

Multiple-Bonded GPIO Connections

The CYBT-343026-01 contains GPIOs, which are multiple-bonded at the silicon level. If any of these dual-bonded GPIOs are used, only the functionality and features for one of these port pins may be used. The desired port pin should be configured in the WICED Studio SDK. For details on the features and functions that each of these multiple-bonded GPIOs provide, refer to Table 4.

The following list details the multiple-bonded GPIOs available on the CYBT-343026-01 module:

PAD 1 P0/34: I2S_WS_PCM_SYNC/P0/P34 (triple bonded; only one of four is available)

PAD 2 I2C_SCL: I2S_PCM_OUT/P3/P29/P35 (quadruple bonded; only one of four is available)

PAD 4 I2C_SDA: I2S_PCM_IN/P12 (dual bonded; only one of two is available)

PAD 5 P2/P37/P28: I2S_PCM_CLK/P2/P28/P37 (quadruple bonded; only one of four is available)

PAD 11 GPIO_0: GPIO_0/P36/P38 (triple bonded; only one of three is available)

PAD 12 GPIO_1: GPIO_1/P25/P32 (triple bonded; only one of three is available)

PAD 14 GPIO_4: GPIO_4/LPO_IN/P6/P31 (quadruple bonded; only of four is available)

PAD 15 P4/P24: BT_CLK_REQ/P4/P24 (triple bonded; only one of three is available)

PAD 19 GPIO_7: GPIO_7/P30 (Dual bonded; only one of two is available)

PAD 22 GPIO_3: GPIO_3/P27/P33 (triple bonded; only one of three is available)

PAD 23 GPIO_6: GPIO_6/P11/P26 (triple bonded; only one of three is available)

Downloaded from Arrow.com.

Figure 9 illustrates the CYBT-343026-01 schematic.

Figure 9. CYBT-343026-01 Schematic Diagram

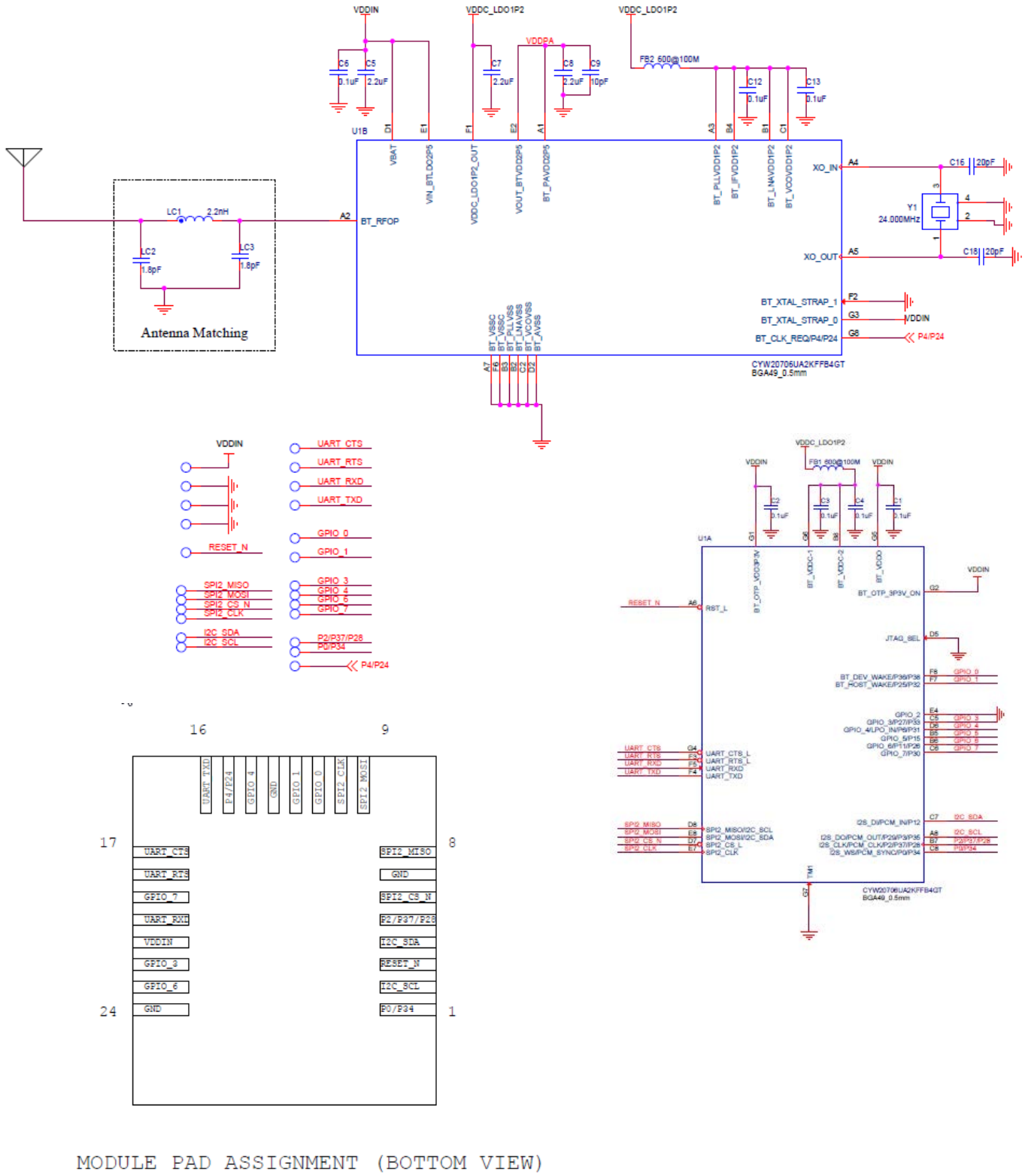

Downloaded from Arrow.com.

Critical Components List

Table 5 details the critical components used in the CYBT-343026-01 module.

Table 5. Critical Component List

Component	Reference Designator	Description
Silicon	U1	49-pin FBGA BT/Bluetooth LE Silicon Device - CYW20706
Silicon	U2	8-pin TDF8N, 512K Serial Flash
Crystal	Y1	24.000 MHz, 12PF

Antenna Design

Table 6 details trace antenna used in the CYBT-343026-01 module. For more information, see Table 6.

Table 6. Trace Antenna Specifications

Item	Description
Frequency Range	2400–2500 MHz
Peak Gain	–0.5-dBi typical
Return Loss	10-dB minimum

Downloaded from Arrow.com.

Functional Description

Bluetooth Baseband Core

The Bluetooth Baseband Core (BBC) implements all of the time-critical functions required for high-performance Bluetooth operation. The BBC manages the buffering, segmentation, and routing of data for all connections. It also buffers data that passes through it, handles data flow control, schedules SCO/ACL and TX/RX transactions, monitors Bluetooth slot usage, optimally segments and packages data into baseband packets, manages connection status indicators, and composes and decodes HCI packets. In addition to these functions, it independently handles HCI event types, and HCI command types. The following transmit and receive functions are also implemented in the BBC hardware to increase reliability and security of the TX/RX data before sending over the air:

Symbol timing recovery, data deframing, forward error correction (FEC), header error control (HEC), cyclic redundancy check (CRC), data decryption, and data dewhitening in the receiver.

Data framing, FEC generation, HEC generation, CRC generation, key generation, data encryption, and data whitening in the transmitter.

Table 7. Bluetooth Features

Bluetooth 1.0	Bluetooth 1.2	Bluetooth 2.0
Basic Rate	Interlaced Scans	EDR 2 Mbps and 3 Mbp
SCO	Adaptive Frequency Hopping	–
Paging and Inquiry	eSCO	–
Page and Inquiry Scan	–	–
Sniff	–	–
Bluetooth 2.1	**Bluetooth 3.0**	**Bluetooth 4.0**
Secure Simple Pairing	Unicast Connectionless Data	Bluetooth Low Energy
Enhanced Inquiry Response	Enhanced Power Control	–
Sniff Subrating	eSCO	–
Bluetooth 4.1	**Bluetooth 4.2**	
Low Duty Cycle Advertising	Data Packet Length Extension	
Dual Mode	LE Secure Connection	
LE Link Layer Topology	Link Layer Privacy	

Link Control Layer

The link control layer is part of the Bluetooth link control functions that are implemented in dedicated logic in the link control unit (LCU). This layer consists of the command controller that takes commands from the software, and other controllers that are activated or configured by the command controller, to perform the link control tasks. Each task is performed in a different state in the Bluetooth Link Controller.

States:
- Standby
- Connection
- Page
- Page Scan
- Inquiry
- Inquiry Scan
- Sniff
- Advertising
- Scanning

Downloaded from Arrow.com.

Test Mode Support

The CYBT-343026-01 fully supports the Bluetooth Test mode as described in Part I:1 of the Specification of the Bluetooth System Version 3.0. This includes the transmitter tests, normal and delayed loopback tests, and reduced hopping sequence.

In addition to the standard Bluetooth Test Mode, the CYBT-343026-01 also supports enhanced testing features to simplify RF debugging and qualification and type-approval testing. These features include:

- Fixed frequency carrier wave (unmodulated) transmission
  - Simplifies some type-approval measurements (Japan)
  - Aids in transmitter performance analysis
- Fixed frequency constant receiver mode
  - Receiver output directed to I/O pin
  - Allows for direct BER measurements using standard RF test equipment
  - Facilitates spurious emissions testing for receive mode
- Fixed frequency constant transmission
  - 8-bit fixed pattern or PRBS-9
  - Enables modulated signal measurements with standard RF test equipment.

Frequency Hopping Generator

The frequency hopping sequence generator selects the correct hopping channel number based on the link controller state, Bluetooth clock, and device address.

Downloaded from Arrow.com.

Microcontroller Unit

The microprocessor unit in CYBT-343026-01 runs software from the link control (LC) layer up to the host controller interface (HCI). The microprocessor is based on the Cortex-M3 32-bit RISC processor with embedded ICE-RT debug and JTAG interface units. The microprocessor also includes 848 KB of ROM for program storage and boot ROM, 352 KB of RAM for data scratch-pad, and patch RAM code.

The internal boot ROM provides flexibility during power-on reset to enable the same device to be used in various configurations. At power-up, the lower layer protocol stack is executed from the internal ROM.

External patches can be applied to the ROM-based firmware to provide flexibility for bug fixes and features additions. These patches can be downloaded using external NVRAM. The device can also support the integration of user applications and profiles using an external serial flash memory.

NVRAM Configuration Data and Storage

NVRAM contains configuration information about the customer application, including the following:

Fractional-N information

BD_ADDR

UART baud rate

SDP service record

File system information used for code, code patches, or data. The CYBT-343026-01 uses SPI Serial Flash for NVRAM storage.

One-Time Programmable Memory

The microprocessor unit in CYBT-343026-01 includes 2 KB of one-time programmable (OTP) memory to allow manufacturing customization and to avoid the need for an on-board NVRAM. If customization is not required, then the OTP does not need to be programmed. Whether the OTP is programmed or not, it is disabled when the boot process is complete to save power. The OTP is designed to store a minimal amount of information. Aside from OTP data, most user configuration information will be downloaded to RAM after the CYBT-343026-01 boots and is ready for host transport communication.

The OTP contents are limited to:

Parameters required prior to downloading the user configuration to RAM.

Parameters unique to each part and each customer (for example, the Bluetooth device address and/or the software license key).

VDDIN for the module must be limited to the 3.0 V to 3.6 V power supply range if OTP is used in the application.

Downloaded from Arrow.com.

External Reset (XRES)

The CYBT-343026-01 has an integrated power-on reset circuit that completely resets all circuits to a known power-on state. An external active low reset signal, XRES, can be used to put the CYBT-343026-01 in the reset state. The XRES pin has an internal pull-up resistor and, in most applications, it does not require anything to be connected to it.

Figure 10. External Reset Internal Timing

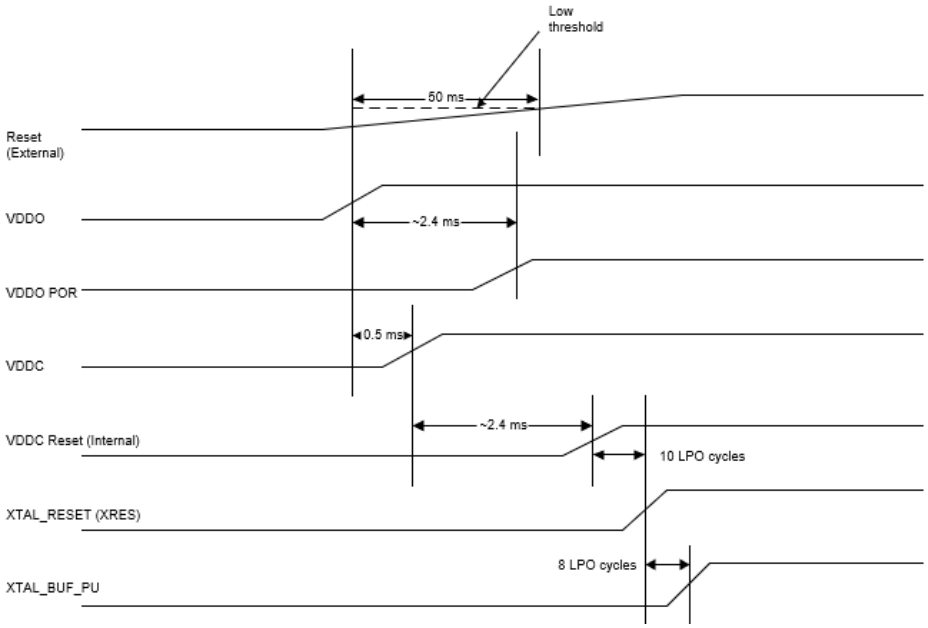

External Reset (XRES) Recommended External Components and Proper Operation

During a power-on event, the XRES line of the CYBT-343026-01 is required to be held low 50 ms after the VDD power supply input to the module is stable. Refer to Figure 11 for the Power-On XRES timing operation. This power-on operation can be accomplished in the following ways:

A host device should connect a GPIO to the XRES of the Cypress CYBT-343026-01 module and pull XRES low until VDD is stable. XRES can be released after VDD is stable.

If the XRES connection of the CYBT-343026-01 module is not used in the application, a 10-µF capacitor may be connected to the XRES solder pad of the CYBT-343026-01.

The XRES release timing can also be controlled via an external voltage detection circuit.

Figure 11. Power-On External Reset (XRES) Operation

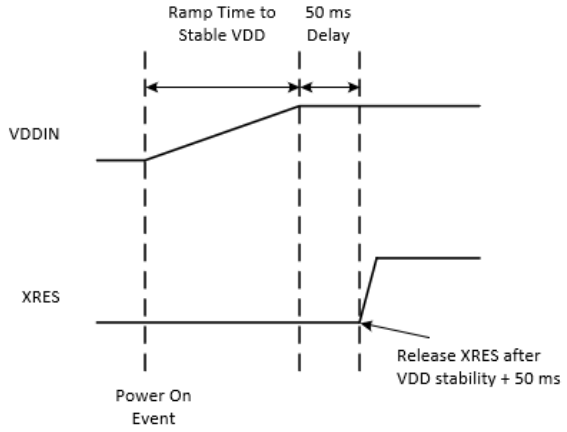

Downloaded from Arrow.com.

Integrated Radio Transceiver

The CYBT-343026-01 has an integrated radio transceiver that has been optimized for use in 2.4-GHz Bluetooth wireless systems. It has been designed to provide low-power, low-cost, robust communications for applications operating in the globally available 2.4-GHz unlicensed ISM band. The CYBT-343026-01 is fully compliant with the Bluetooth Radio Specification and enhanced data rate (EDR) specification and meets or exceeds the requirements to provide the highest communication link quality of service.

Transmitter Path

The CYBT-343026-01 a fully integrated zero-IF transmitter. The baseband transmit data is GFSK-modulated in the modem block and upconverted to the 2.4-GHz ISM band in the transmitter path. The transmitter path consists of signal filtering, I/Q upconversion, output power amplifier, and RF filtering. The transmitter path also incorporates π/4-DQPSK for 2 Mbps and 8-DPSK for 3 Mbps to support EDR. The transmitter section is compatible with the Bluetooth LE specification. The transmitter PA bias can also be adjusted to provide Bluetooth class 1 or class 2 operation.

Digital Modulator

The digital modulator performs the data modulation and filtering required for the GFSK, π4-DQPSK, and 8-DPSK signal. The fully digital modulator minimizes any frequency drift or anomalies in the modulation characteristics of the transmitted signal and is much more stable than direct VCO modulation schemes.

Digital Demodulator and Bit Synchronizer

The digital demodulator and bit synchronizer take the low-IF received signal and perform an optimal frequency tracking and bit synchronization algorithm.

Power Amplifier

The fully integrated PA supports Class 1 or Class 2 output using a highly linearized, temperature-compensated design. The transmitter features a sophisticated on-chip transmit signal strength indicator (TSSI) block to keep the absolute output power variation within a tight range across process, voltage, and temperature.

Receiver Path

The receiver path uses a low-IF scheme to downconvert the received signal for demodulation in the digital demodulator and bit synchronizer. The receiver path provides a high degree of linearity, an extended dynamic range, and high-order on-chip channel filtering to ensure reliable operation in the noisy 2.4 GHz ISM band. The front-end topology, with built-in out-of-band attenuation, enables the CYBT-343026-01 to be used in most applications with minimal off-chip filtering. For integrated handset operation, in which the Bluetooth function is integrated close to the cellular transmitter, external filtering is required to eliminate the desensitization of the receiver by the cellular transmit signal.

Digital Demodulator and Bit Synchronizer

The digital demodulator and bit synchronizer take the low-IF received signal and perform an optimal frequency tracking and bit synchronization algorithm.

Receiver Signal Strength Indicator

The radio portion of the CYBT-343026-01 provides a receiver signal strength indicator (RSSI) to the baseband. This enables the controller to take part in a Bluetooth power-controlled link by providing a metric of its own receiver signal strength to determine whether the transmitter should increase or decrease its output power.

Local Oscillator Generation

The local oscillator (LO) provides fast frequency hopping (1600 hops/second) across the 79 maximum available channels. The LO generation sub-block employs an architecture for high immunity to LO pulling during PA operation. The CYBT-343026-01 uses an internal loop filter.

Calibration

The CYBT-343026-01 radio transceiver features an automated calibration scheme that is fully self-contained in the radio. No user interaction is required during normal operation or during manufacturing to provide optimal performance. Calibration tunes the performance of all the major blocks within the radio to within 2% of optimal conditions, including gain and phase characteristics of filters, matching between key components, and key gain blocks. This takes into account process variation and temperature variation. Calibration occurs transparently during normal operation during the settling time of the hops, and calibrates for temperature variations as the device cools and heats during normal operation in its environment.

Downloaded from Arrow.com.

Internal LDO

The microprocessor in CYBT-343026-01 uses two LDOs – one for 1.2 V and the other for 2.5 V. The 1.2-V LDO provides power to the baseband and radio and the 2.5-V LDO powers the PA.

Collaborative Coexistence

The CYBT-343026-01 provides extensions and collaborative coexistence to the standard Bluetooth AFH for direct communication with WLAN devices. Collaborative coexistence enables WLAN and Bluetooth to operate simultaneously in a single device. The device supports industry-standard coexistence signaling, including 802.15.2, and supports Cypress and third-party WLAN solutions.

Global Coexistence Interface

The CYBT-343026-01 supports the proprietary Cypress Global Coexistence Interface (GCI) which is a 2-wire interface.

The following key features are associated with the interface:

Enhanced coexistence data can be exchanged over GCI_SECI_IN and GCI_SECI_OUT a two-wire interface, one serial input (GCI_SECI_IN), and one serial output (GCI_SECI_OUT). The pad configuration registers must be programmed to choose the digital I/O pins that serve the GCI_SECI_IN and GCI_SECI_OUT function.

It supports generic UART communication between WLAN and Bluetooth devices.

To conserve power, it is disabled when inactive.

It supports automatic resynchronization upon waking from sleep mode.

It supports a baud rate of up to 4 Mbps.

SECI I/O

The microprocessor in CYBT-343026-01 has dedicated GCI_SECI_IN (PAD 23/GPIO_6) and GCI_SECI_OUT (PAD19/GPIO_7) pins. Refer to Table 4, which detail the module solder pad number used for SECI I/O.

Downloaded from Arrow.com.

Peripheral and Communication Interfaces

I^{2}C Communication Interface

The CYBT-343026-01 provides a 2-pin master I^{2}C interface, which can be used to retrieve configuration information from an external EEPROM or to communicate with peripherals such as track-ball or touch-pad modules, and motion tracking ICs used in mouse devices. This interface is compatible with I^{2}C slave devices. I^{2}C does not support multimaster capability or flexible wait-state insertion by either master or slave devices.

The following transfer clock rates are supported by the I^{2}C:

100 kHz

400 kHz

800 kHz (not a standard I^{2}C-compatible speed.)

1 MHz (Compatibility with high-speed I^{2}C-compatible devices is not guaranteed.)

The following transfer types are supported by the I^{2}C:

Read (Up to 127 bytes can be read)

Write (Up to 127 bytes can be written)

Read-then-Write (Up to 127 bytes can be read and up to 127 bytes can be written)

Write-then-Read (Up to127 bytes can be written and up to 127 bytes can be read)

Hardware controls the transfers, requiring minimal firmware setup and supervision.

The clock pad (I2C_SCL) and data pad 2 (I2C_SDA) are both open-drain I/O pins. Pull-up resistors, external to the CYBT-343026-01, are required on both the SCL and SDA pad for proper operation.

HCI UART Interface

The UART physical interface is a standard, 4-wire interface (RX, TX, RTS, and CTS) with adjustable baud rates from 38400 bps to 4 Mbps. During initial boot, UART speeds may be limited to 750 kbps. The baud rate may be selected via a vendor-specific UART HCI command. The CYBT-343026-01 has a 1040-byte receive FIFO and a 1040-byte transmit FIFO to support enhanced data rates. The interface supports the Bluetooth UART HCI (H4) specification. The default baud rate for H4 is 115.2 kbaud.

The UART clock default setting is 24 MHz, and can be configured to run as high as 48 MHz to support up to 4 Mbps. The baud rate of the CYBT-343026-01UART is controlled by two values. The first is a UART clock divisor (set in the DLBR register) that divides the UART clock by an integer multiple of 16. The second is a baud rate adjustment (set in the DHBR register) that is used to specify a number of UART clock cycles to stuff in the first or second half of each bit time. Up to eight UART cycles can be inserted into the first half of each bit time, and up to eight UART clock cycles can be inserted into the end of each bit time.

Table 8 contains example values to generate common baud rates with a 24 MHz UART clock.

Table 8. Common Baud Rate Examples, 24 MHz Clock

Baud Rate (bps)	Baud Rate Adjustment		Mode	Error (%)
	High Nibble	Low Nibble		
4M	0xFF	0xF4	High rate	0.00
3M	0xFF	0xF8	High rate	0.00
2M	0XFF	0XF4	High rate	0.00
1M	0X44	0XFF	Normal	0.00
921600	0x05	0x05	Normal	0.16
460800	0x02	0x02	Normal	0.16
230400	0x04	0x04	Normal	0.16
115200	0x00	0x00	Normal	0.16
57600	0x00	0x00	Normal	0.16
38400	0x01	0x00	Normal	0.00

Downloaded from Arrow.com.

Normally, the UART baud rate is set by a configuration record downloaded after reset. Support for changing the baud rate during normal HCI UART operation is included through a vendor-specific command that allows the host to adjust the contents of the baud rate registers.

The CYBT-343026-01 UART operates correctly with the host UART as long as the combined baud rate error of the two devices is within ±2%.

Peripheral UART Interface

The CYBT-343026-01 has a second UART that may be used to interface to other peripherals. This peripheral UART is accessed through the optional I/O ports, which can be configured individually and separately for each signal as shown in Table 9

Table 9. CYBT-343026-01 Peripheral UART

Signal Name	PUART_TX	PUART_RX	PUART_CTS_N	PUART_RTS_N
PUART Port Configuration #1	P0	P2	P3	P6
PUART Port Configuration #2	P31	P33	P35	P30

Serial Peripheral Interface

The CYBT-343026-01 has two independent SPI interfaces. One is a master-only interface (SPI2) and the other (SPI1) can be either a master or a slave. Each interface has a 64-byte transmit buffer and a 64-byte receive buffer. To support more flexibility for user applications, the CYBT-343026-01 has optional I/O ports that can be configured individually and separately for each functional pin. The CYBT-343026-01 acts as an SPI master device that supports 3.3-V SPI slaves. In master mode, refer to Table 4 to identify the solder pads available for SPI1_MISO, SPI1_MOSI, and SPI1_CLK connections.

Note: In master mode, any available GPIO can be assigned as SPI1_CS.

The CYBT-343026-01 can also act as an SPI slave device that supports a 3.3-V SPI master. For SPI1 slave mode, refer to Table 4 to identify the solder pads available for SPI1 slave mode connections.

SPI voltage depends on V_{DDIN}; therefore, V_{DDIN} should be set to 3.3 V for SPI communication.

PCM Interface

The CYBT-343026-01 includes a PCM interface that shares pins with the I^2S interface. The PCM Interface on the CYBT-343026-01 can connect to linear PCM codec devices in master or slave mode. In master mode, the CYBT-343026-01 generates the PCM_CLK and PCM_SYNC signals. In slave mode, these signals are provided by another master on the PCM interface and are inputs to the CYBT-343026-01.

Slot Mapping

The CYBT-343026-01 supports up to three simultaneous full-duplex SCO or eSCO channels through the PCM interface. These three channels are time-multiplexed on to the single PCM interface by using a time-slotting scheme where the 8 kHz or 16 kHz audio sample interval is divided into as many as 16 slots. The number of slots is dependent on the selected interface rate (128 kHz, 512 kHz, or 1024 kHz). The corresponding number of slots for these interface rates is 1, 2, 4, 8, and 16, respectively. Transmit and receive PCM data from an SCO channel is always mapped to the same slot. The PCM data output driver tristates its output on unused slots to allow other devices to share the same PCM interface signals. The data output driver tristates its output after the falling edge of the PCM clock during the last bit of the slot.

Frame Synchronization

The CYBT-343026-01 supports both short- and long-frame synchronization in both master and slave modes. In short-frame synchronization mode, the frame synchronization signal is an active-high pulse at the audio frame rate that is a single-bit period in width and is synchronized to the rising edge of the bit clock. The PCM slave looks for a high on the falling edge of the bit clock and expects the first bit of the first slot to start at the next rising edge of the clock. In long-frame synchronization mode, the frame synchronization signal is again an active-high pulse at the audio frame rate; however, the duration is three-bit periods and the pulse starts coincident with the first bit of the first slot.

Data Formatting

The CYBT-343026-01 may be configured to generate and accept several different data formats. For conventional narrowband speech mode, the CYBT-343026-01 uses 13 of the 16 bits in each PCM frame. The location and order of these 13 bits can be configured to support various data formats on the PCM interface. The remaining three bits are ignored on the input and may be filled with 0s, 1s, a sign bit, or a programmed value on the output. The default format is 13-bit 2's complement data, left justified, and clocked MSB first.

Downloaded from Arrow.com.

Clock Frequencies

The CYBT-343026-01 has an integrated 24-MHz crystal on the module. There is no need to add an additional crystal oscillator.

GPIO Port

The CYBT-343026-01 has nine GPIOs besides two I^2C pads. All GPIOs support programmable pull-ups and are capable of driving up to 8 mA at 3.3 V or 4 mA at 1.8 V, except chips P26, P27, P28, and P29, which are capable of driving up to 16 mA at 3.3 V.

The following GPIOs are available on the module pads:

PAD 1 P0/34: I2S_WS_PCM_SYNC/P0/P34 (triple bonded; only one of four is available)

PAD 2 I2C_SCL: I2S_PCM_OUT/P3/P29/P35 (quadruple bonded; only one of four is available)

PAD 4 I2C_SDA: I2S_PCM_IN/P12 (dual bonded; only one of two is available)

PAD 5 P2/P37/P28: I2S_PCM_CLK/P2/P28/P37 (quadruple bonded; only one of four is available)

PAD 11 GPIO_0: GPIO_0/P36/P38 (triple bonded; only one of three is available)

PAD 12 GPIO_1: GPIO_1/P25/P32 (triple bonded; only one of three is available)

PAD 14 GPIO_4: GPIO_4/LPO_IN/P6/P31 (quadruple bonded; only of four is available)

PAD 15 P4/P24: BT_CLK_REQ/P4/P24 (triple bonded; only one of three is available)

PAD 19 GPIO_7: GPIO_7/P30 (Dual bonded; only one of two is available)

PAD 22 GPIO_3: GPIO_3/P27/P33 (triple bonded; only one of three is available)

PAD 23 GPIO_6: GPIO_6/P11/P26 (triple bonded; only one of three is available)

Refer to Table 4 to determine what GPIOs can be configured as ADC Inputs.

NOTE: Any available GPIO can be used for SPI1_CS when in master mode.

Port 26–Port 29 in PAD 23/PAD 22/PAD 5/PAD 2

P[26:29] in PAD 23/PAD 22/PAD 5/PAD 2 consists of four pins. All pins are capable of sinking up to 16 mA for LEDs. These pins also have PWM functionality, which can be used for LED dimming.

For a description of the capabilities of all GPIOs, see Table 4.

PWM

The CYBT-343026-01 has four PWMs. The PWM module consists of the following:

PWM0-3

The following GPIOs can be mapped as PWMs, module pad shown in [ ]:
- PWM0: P26 on P11/P26 [Pad 23]
- PWM1: P27 on P33/P27 [Pad 22]
- PWM2: P28 on P2/P37/P28 [Pad 5]
- PWM3: P29 on P3/P35/P29/I2C_SCL [Pad 2]

PWM1-4: Each of the four PWM channels contains the following registers:
- 10-bit initial value register (read/write)
- 10-bit toggle register (read/write)
- 10-bit PWM counter value register (read)

PWM configuration register shared among PWM1-4 (read/write). This 12-bit register is used:
- To configure each PWM channel
- To select the clock of each PWM channel
- To change the phase of each PWM channel

Figure 12 shows the structure of one PWM.

Downloaded from Arrow.com.

Figure 12. PWM Block Diagram

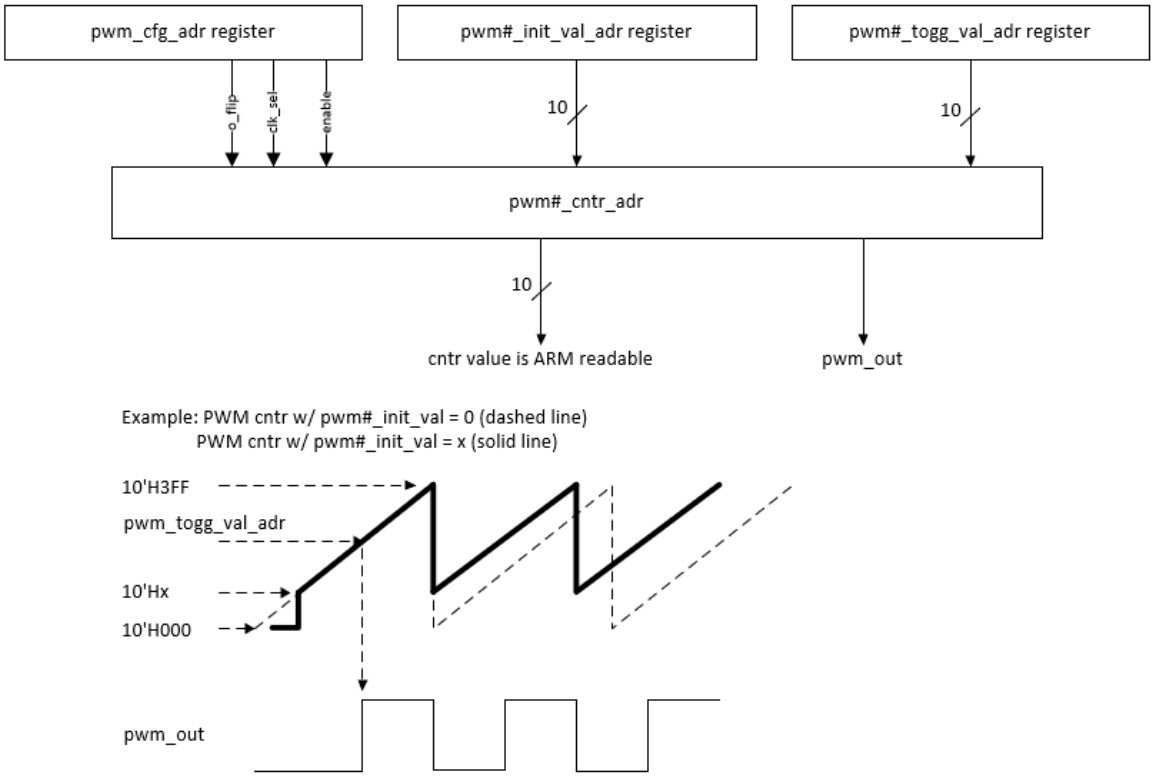

Downloaded from Arrow.com.

Power Management Unit

The Power Management Unit (PMU) provides power management features that can be invoked by software through power management registers or packet-handling in the baseband core.

RF Power Management

The BBC generates power-down control signals for the transmit path, receive path, PLL, and power amplifier to the 2.4-GHz transceiver, which then processes the power-down functions accordingly.

Host Controller Power Management

Power is automatically managed by the firmware based on input device activity. As a power-saving task, the firmware controls the disabling of the on-chip regulator when in Deep Sleep (HIDOFF) mode.

BBC Power Management

There are several low-power operations for the BBC:

Physical layer packet handling turns RF on and off dynamically within packet TX and RX.

Bluetooth-specified low-power connection mode. While in these low-power connection modes, the CYBT-343026-01 runs on the Low Power Oscillator and wakes up after a predefined time period.

The CYBT-343026-01 automatically adjusts its power dissipation based on user activity. The following power modes are supported:

Active mode

Idle mode

Sleep mode

HIDOFF (Deep Sleep) mode

The CYBT-343026-01 transitions to the next lower state after a programmable period of user inactivity. Busy mode is immediately entered when user activity resumes.

In HIDOFF (Deep Sleep) mode, the CYBT-343026-01 baseband and core are powered off by disabling power to LDOOUT. The VDDO domain remains powered up and will turn the remainder of the chip on when it detects user events. This mode minimizes chip power consumption and is intended for long periods of inactivity.

Downloaded from Arrow.com.

Electrical Characteristics

Table 10 shows the maximum electrical rating for voltages referenced to VDDIN pad.

Table 10. Maximum Electrical Rating

Rating	Symbol	Value	Unit
V_{DDIN}	–	3.795	V
Voltage on input or output pin	–	V_{SS} – 0.3 to V_{DD} + 0.3	V
Operating ambient temperature range	T_{opr}	–30 to +85	°C
Storage temperature range	T_{stg}	–40 to +85	°C

Table 11 shows the power supply characteristics for the range T_J = 0 to 125 °C.

Table 11. Power Supply

Parameter	Description	Minimum[6]	Typical	Maximum[6]	Unit
V_{DDIN}	Power Supply Input (CYBT-343026-01)	2.3	–	3.6	V
V_{DDIN_RIPPLE}	Maximum Power Supply Ripple for V_{DDIN} input voltage	–	–	100	mV

Table 12 shows the specifications for the digital voltage levels.

Table 12. Digital Voltage Levels

Characteristics	Symbol	Min	Typ	Max	Unit
Input low voltage	V_{IL}	–	–	0.8	V
Input high voltage	V_{IH}	2.0	–	–	V
Output low voltage	V_{OL}	–	–	0.4	V
Output high voltage	V_{OH}	V_{DDIN} – 0.4	–	–	V
Input capacitance (V_{DDMEM} domain)	C_{IN}	–	–	0.4	pF

Table 13 shows the current consumption measurements

Table 13. Bluetooth, Bluetooth LE, BR and EDR Current Consumption

Parameter	Description	Silicon or Module Parameter	Output Power Level/Class	Typ	Unit
Bluetooth Classic (BR, EDR)					
3DM5/3DH5	HCI control mode	Silicon	Class 1	37.1	mA
DM1/DH1	HCI control mode	Silicon	Class 1	32.2	mA
DM3/DH3	HCI control mode	Silicon	Class 1	38.2	mA
DM5/DH5	HCI control mode	Silicon	Class 1	38.5	mA
RX_{1M_BR}	Peak receive (1 Mbps) current level when receiving a basic rate packet (radio only)	Silicon	Class 1	26.4	mA
TX_{1M_BR}	Peak transmit (1 Mbps) current level when transmitting a basic rate packet (radio only)	Silicon	10 dBm	60.3	mA
RX_{23M_EDR}	Peak receive (EDR) current level when receiving a 2 or 3 Mbps rate packet (radio only)	Silicon	Class 1	26.4	mA
TX_{23M_EDR}	Peak transmit (EDR) current level when transmitting a 2 or 3 Mbps rate packet (radio only)	Silicon	8 dBm	52.5	mA
Deep Sleep	Deep Sleep (HIDOFF) current	Module	All	2.69	uA

Note

6. Overall performance degrades beyond minimum and maximum supply voltages.The voltage range specified is determined by the minimum and maximum operating voltage of the SPI Serial Flash included on the module.

Downloaded from Arrow.com.

Table 13. Bluetooth, Bluetooth LE, BR and EDR Current Consumption

Parameter	Description	Silicon or Module Parameter	Output Power Level/Class	Typ	Unit
Bluetooth Classic (BR, EDR)					
IDLE	Module is idle, non-discoverable and non-connectable	Module	Class 1	0.11	mA
I_{Scan}	Inquiry Scan (1.28 seconds)	Module	Class 1	0.65	mA
P_{Scan}	Page scan (1.28 seconds)	Module	Class 1	0.65	mA
$I_{Scan}+P_{Scan}$	Inquiry scan + Page Scan (1.28 seconds)	Module	Class 1	1.2	mA
Connected	Connected with no data transfer	Module	Class 1	2.6	mA
Connected + P_{Scan}	Connected with no data transfer + Page Scan (1.28 seconds)	Module	Class 1	3.3	mA
Connected + I_{Scan} + P_{Scan}	Connected with no data transfer + Inquiry Scan(1.28 seconds) + Page Scan (1.28 seconds)	Module	Class 1	3.6	mA
Connected + SNIFF	Connected with no data transfer + SNIFF (500 ms)	Module	Class 1	0.95	mA
Connected + SNIFF+ I_{Scan} + P_{Scan}	Connected with no data transfer + SNIFF (500 ms) + Inquiry Scan and Page Scan 1.28 seconds	Module	Class 1	1.9	mA
TX_BR	Data transfer @ 115200 baud rate	Module	Class 1	22	mA
TX+SNIFF_BR	Data transfer @ 115200 baud rate + Sniff (500 ms)	Module	Class 1	5.5	mA
Bluetooth Low Energy					
TX_{Peak}	Peak TX current	Module	-2.5dBm +6.5 dBm +9.0 dBm	42 54 56	mA
RX_{Peak}	Peak RX Current	Module	-2.5dBm +6.5 dBm +9.0 dBm	28 28 28	mA
Deep Sleep	Deep Sleep (HIDOFF) current	Module	All	2.69	uA
Connection_1s	Connection - 1-second interval	Module	-2.5dBm +6.5 dBm +9.0 dBm	970 980 1000	uA
Connection_4s	Connection - 4-second interval	Module	-2.5dBm +6.5 dBm +9.0 dBm	900 945 950	uA
Adv_640	Advertisement (low duty cycle) - 640 ms	Module	-2.5dBm +6.5 dBm +9.0 dBm	0.4 0.5 0.5	mA
Adv_30	Advertisement (high duty cycle) - 30 ms	Module	-2.5dBm +6.5 dBm +9.0 dBm	3.8 4.2 4.3	mA
Adv_1s	1-second non-connectable advertisement (Beacon)	Module	-2.5dBm +6.5 dBm +9.0 dBm	315 350 350	uA

Downloaded from Arrow.com.

Chipset RF Specifications

All specifications in Table 14 are for industrial temperatures and are single-ended. Unused inputs are left open.

Table 14. Chipset Receiver RF Specifications

Parameter	Conditions	Minimum	Typical[7]	Maximum	Unit
General					
Frequency range	–	2402	–	2480	MHz
RX sensitivity[8]	GFSK, 0.1% BER, 1 Mbps	–	–93.5	–	dBm
	LE GFSK, 0.1% BER, 1 Mbps	–	–96.5	–	dBm
	π/4-DQPSK, 0.01% BER, 2 Mbps	–	–95.5	–	dBm
	8-DPSK, 0.01% BER, 3 Mbps	–	–89.5	–	dBm
Maximum input	GFSK, 1 Mbps	–	–	–20	dBm
Maximum input	π/4-DQPSK, 8-DPSK, 2/3 Mbps	–	–	–20	dBm
Interference Performance					
C/I cochannel	GFSK, 0.1% BER	–	9.5	11	dB
C/I 1 MHz adjacent channel	GFSK, 0.1% BER	–	–5	0	dB
C/I 2 MHz adjacent channel	GFSK, 0.1% BER	–	–40	–30.0	dB
C/I ≥ 3 MHz adjacent channel	GFSK, 0.1% BER	–	–49	–40.0	dB
C/I image channel	GFSK, 0.1% BER	–	–27	–9.0	dB
C/I 1 MHz adjacent to image channel	GFSK, 0.1% BER	–	–37	–20.0	dB
C/I cochannel	π/4-DQPSK, 0.1% BER	–	11	13	dB
C/I 1 MHz adjacent channel	π/4-DQPSK, 0.1% BER	–	–8	0	dB
C/I 2 MHz adjacent channel	π/4-DQPSK, 0.1% BER	–	–40	–30.0	dB
C/I ≥ 3 MHz adjacent channel	8-DPSK, 0.1% BER	–	–50	–40.0	dB
C/I image channel	π/4-DQPSK, 0.1% BER	–	–27	–7.0	dB
C/I 1 MHz adjacent to image channel	π/4-DQPSK, 0.1% BER	–	–40	–20.0	dB
C/I cochannel	8-DPSK, 0.1% BER	–	17	21	dB
C/I 1 MHz adjacent channel	8-DPSK, 0.1% BER	–	–5	5	dB
C/I 2 MHz adjacent channel	8-DPSK, 0.1% BER	–	–40	–25.0	dB
C/I ≥ 3 MHz adjacent channel	8-DPSK, 0.1% BER	–	–47	–33.0	dB
C/I Image channel	8-DPSK, 0.1% BER	–	–20	0	dB
C/I 1 MHz adjacent to image channel	8-DPSK, 0.1% BER	–	–35	–13.0	dB
Out-of-Band Blocking Performance (CW)[9]					
30 MHz–2000 MHz	0.1% BER	–	–10.0	–	dBm
2000–2399 MHz	0.1% BER	–	–27	–	dBm

Notes
7. Typical operating conditions are 1.22-V operating voltage and 25°C ambient temperature.
8. The receiver sensitivity is measured at BER of 0.1% on the device interface.
9. Meets this specification using front-end band pass filter.

Downloaded from Arrow.com.

Table 14. Chipset Receiver RF Specifications (continued)

Parameter	Conditions	Minimum	Typical[7]	Maximum	Unit
2498–3000 MHz	0.1% BER	–	–27	–	dBm
3000 MHz–12.75 GHz	0.1% BER	–	–10.0	–	dBm
Out-of-Band Blocking Performance, Modulated Interferer					
776–764 MHz	CDMA	–	–10[10]	–	dBm
824–849 MHz	CDMA	–	–10[10]	–	dBm
1850–1910 MHz	CDMA	–	–23[10]	–	dBm
824–849 MHz	EDGE/GSM	–	–10[10]	–	dBm
880–915 MHz	EDGE/GSM	–	–10[10]	–	dBm
1710–1785 MHz	EDGE/GSM	–	–23[10]	–	dBm
1850–1910 MHz	EDGE/GSM	–	–23[10]	–	dBm
1850–1910 MHz	WCDMA	–	–23[10]	–	dBm
1920–1980 MHz	WCDMA	–	–23[10]	–	dBm
Intermodulation Performance[11]					
BT, Df = 5 MHz	–	–39.0	–	–	dBm
Spurious Emissions[12]					
30 MHz to 1 GHz	–	–	–	–62	dBm
1 GHz to 12.75 GHz	–	–	–	–47	dBm
65 MHz to 108 MHz	FM Rx	–	–147	–	dBm/Hz
746 MHz to 764 MHz	CDMA	–	–147	–	dBm/Hz
851–894 MHz	CDMA	–	–147	–	dBm/Hz
925–960 MHz	EDGE/GSM	–	–147	–	dBm/Hz
1805–1880 MHz	EDGE/GSM	–	–147	–	dBm/Hz
1930–1990 MHz	PCS	–	–147	–	dBm/Hz
2110–2170 MHz	WCDMA	–	–147	–	dBm/Hz

Notes

10. Numbers are referred to the pin output with an external BPF filter.
11. f0 = -64 dBm Bluetooth-modulated signal, f1 = –39 dBm sine wave, f2 = –39 dBm Bluetooth-modulated signal, f0 = 2f1 – f2, and |f2 – f1| = n*1 MHz, where n is 3, 4, or 5. For the typical case, n = 4.
12. Includes baseband radiated emissions.

Downloaded from Arrow.com.

Table 15. Chipset Transmitter RF Specifications

Parameter	Conditions	Minimum	Typical	Maximum	Unit
General					
Frequency range	–	2402	–	2480	MHz
Class1: GFSK Tx power[13]	–	–	12	–	dBm
Class1: EDR Tx power[14]	–	–	9	–	dBm
Class 2: GFSK Tx power	–	–	2	–	dBm
Power control step	–	2	4	8	dB
Modulation Accuracy					
π/4-DQPSK Frequency Stability	–	–10	–	10	kHz
π/4-DQPSK RMS DEVM	–	–	–	20	%
π/4-QPSK Peak DEVM	–	–	–	35	%
π/4-DQPSK 99% DEVM	–	–	–	30	%
8-DPSK frequency stability	–	–10	–	10	kHz
8-DPSK RMS DEVM	–	–	–	13	%
8-DPSK Peak DEVM	–	–	–	25	%
8-DPSK 99% DEVM	–	–	–	20	%
In-Band Spurious Emissions					
1.0 MHz < |M – N| < 1.5 MHz	–	–	–	–26	dBc
1.5 MHz < |M – N| < 2.5 MHz	–	–	–	–20	dBm
|M – N| ≥ 2.5 MHz	–	–	–	–40	dBm
Out-of-Band Spurious Emissions					
30 MHz to 1 GHz	–	–	–	–36.0[15]	dBm
1 GHz to 12.75 GHz	–	–	–	–30.0[15, 16]	dBm
1.8 GHz to 1.9 GHz	–	–	–	–47.0	dBm
5.15 GHz to 5.3 GHz	–	–	–	–47.0	dBm

Table 16. Chipset Bluetooth LE RF Specifications

Parameter	Conditions	Minimum	Typical	Maximum	Unit
Frequency range	N/A	2402	–	2480	MHz
Rx sense[17]	GFSK, 0.1% BER, 1 Mbps	–	–96.5	–	dBm
Tx power[18]	N/A	–	–	9	dBm
Mod Char: Delta F1 average	N/A	225	255	275	kHz
Mod Char: Delta F2 max[19]	N/A	99.9	–	–	%
Mod Char: Ratio	N/A	0.8	0.95	–	%

13. TBD dBm output for GFSK measured with PAVDD = 2.5 V.
14. TBD dBm output for EDR measured with PAVDD = 2.5 V.
15. Maximum value is the value required for Bluetooth qualification.
16. Meets this spec using a front-end band-pass filter.
17. Dirty Tx is Off.
18. The Bluetooth LE Tx power can be increased to compensate for front-end losses such as BPF, diplexer, switch, etc. The output is capped at 12 dBm out. The Bluetooth LE Tx power at the antenna port cannot exceed the 10 dBm EIRP specification limit.
19. At least 99.9% of all delta F2 max frequency values recorded over 10 packets must be greater than 185 kHz.

Downloaded from Arrow.com.

Timing and AC Characteristics

In this section, use the numbers listed in the **Reference** column of each table to interpret the following timing diagrams.

UART Timing

Table 17. UART Timing Specifications

Reference	Characteristics	Min	Max	Unit
1	Delay time, UART_CTS_N low to UART_TXD valid	–	24	Baud out cycles
2	Setup time, UART_CTS_N high before midpoint of stop bit	–	10	ns
3	Delay time, midpoint of stop bit to UART_RTS_N high	–	2	Baud out cycles

Figure 13. UART Timing

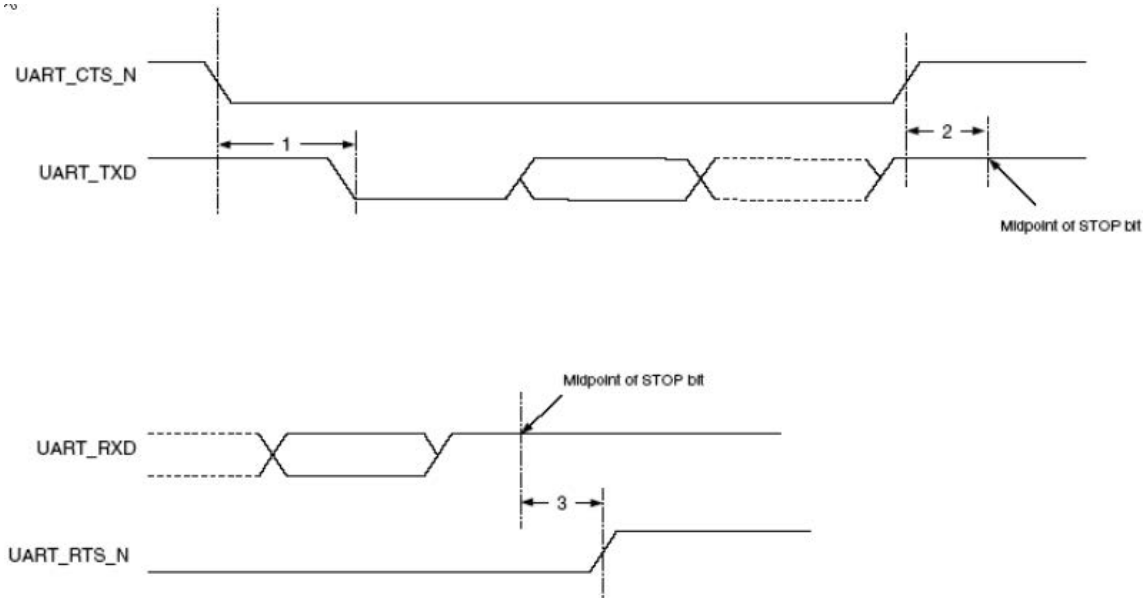

Downloaded from Arrow.com.

SPI Timing

The SPI interface supports clock speeds up to 12 MHz

Table 18 and Figure 14 show the timing requirements when operating in SPI Mode 0 and 2, and SPI Mode 1 and 3, respectively.

Table 18. SPI Mode 0 and 2

Reference	Characteristics	Minimum	Maximum	Unit
1	Time from slave assert SPI_INT to master assert SPI_CSN (DirectRead)	0	∞	ns
2	Time from master assert SPI_CSN to slave assert SPI_INT (DirectWrite)	0	∞	ns
3	Time from master assert SPI_CSN to first clock edge	20	∞	ns
4	Setup time for MOSI data lines	8	½ SCK	ns
5	Hold time for MOSI data lines	8	½ SCK	ns
6	Time from last sample on MOSI/MISO to slave deassert SPI_INT	0	100	ns
7	Time from slave deassert SPI_INT to master deassert SPI_CSN	0	∞	ns
8	Idle time between subsequent SPI transactions	1 SCK	∞	ns

Figure 14. SPI Timing – Mode 0 and 2

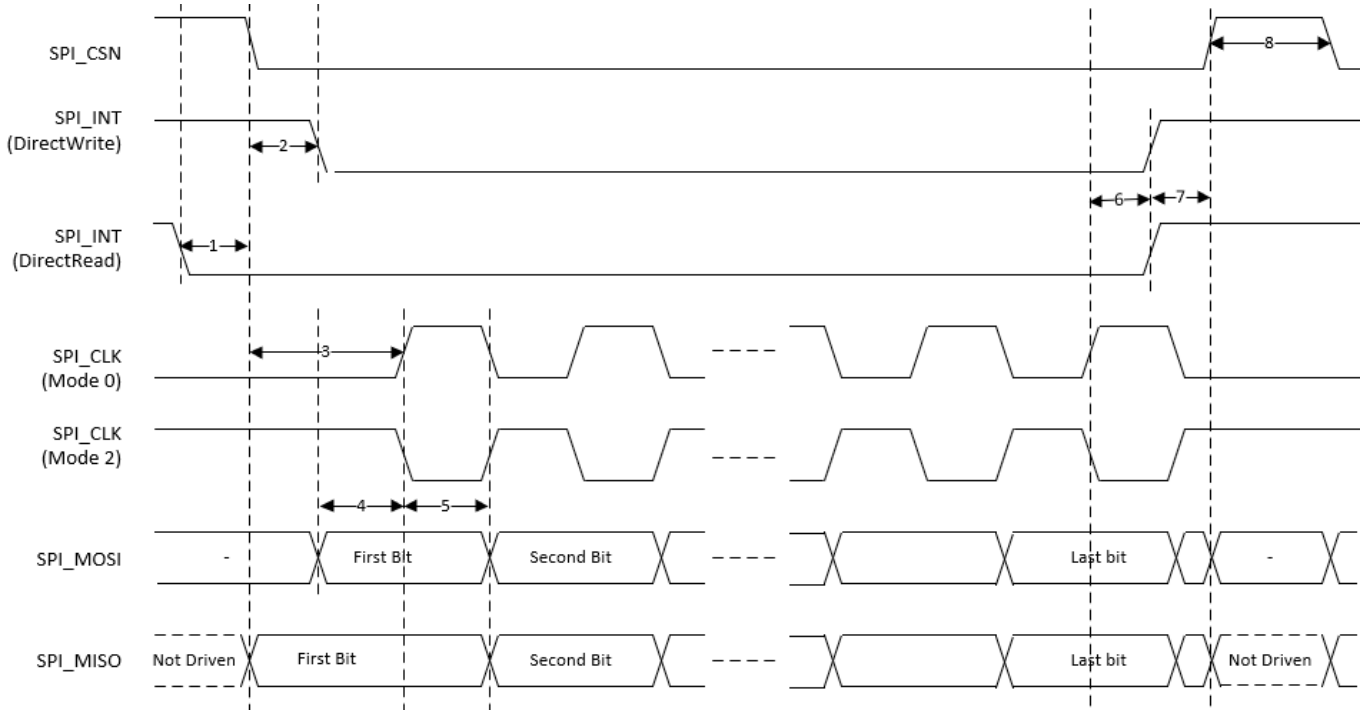

Table 19 and Figure 15 show the timing requirements when operating in SPI Mode 1 and 3.

Downloaded from Arrow.com.

Table 19. SPI Mode 1 and 3

Reference	Characteristics	Minimum	Maximum	Unit
1	Time from slave assert SPI_INT to master assert SPI_CSN (DirectRead)	0	∞	ns
2	Time from master assert SPI_CSN to slave assert SPI_INT (DirectWrite)	0	∞	ns
3	Time from master assert SPI_CSN to first clock edge	20	∞	ns
4	Setup time for MOSI data lines	8	½ SCK	ns
5	Hold time for MOSI data lines	8	½ SCK	ns
6	Time from last sample on MOSI/MISO to slave deassert SPI_INT	0	100	ns
7	Time from slave deassert SPI_INT to master deassert SPI_CSN	0	∞	ns
8	Idle time between subsequent SPI transactions	1 SCK	∞	ns

Figure 15. SPI Timing – Mode 1 and 3

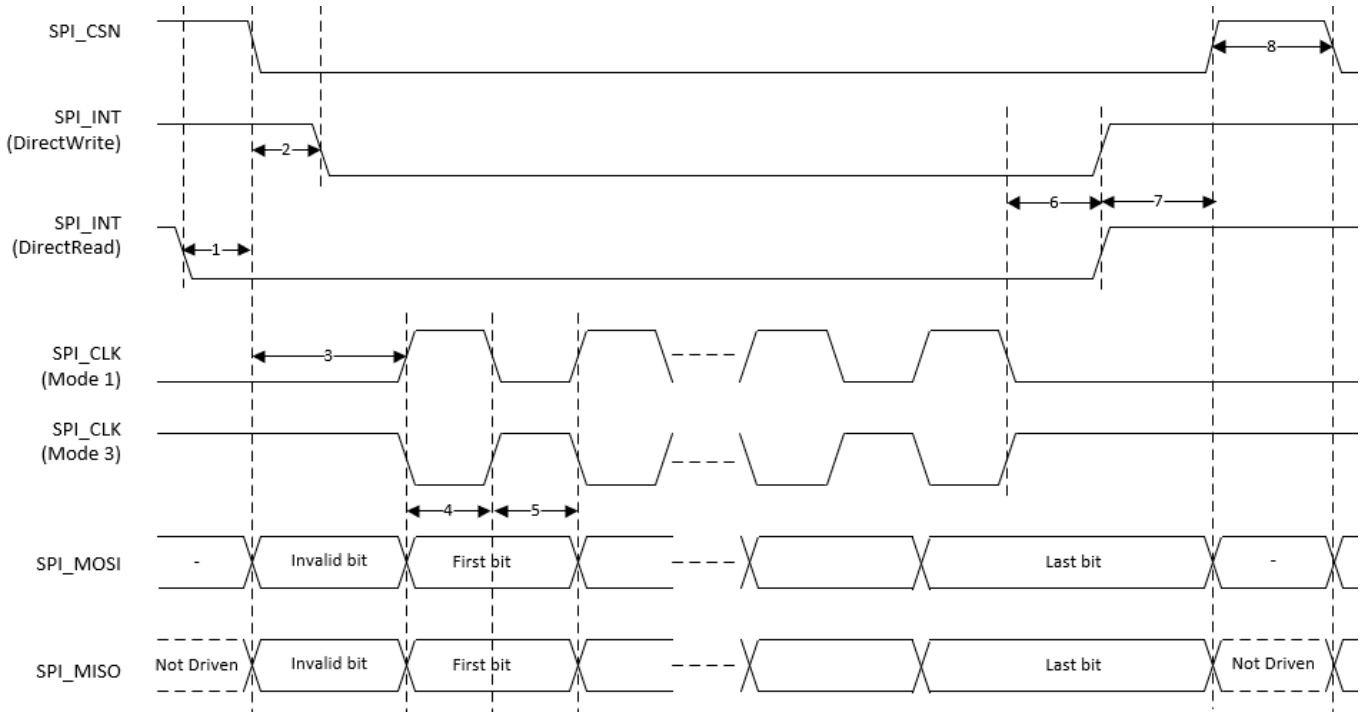

Downloaded from Arrow.com.

I²C Interface Timing

Table 20. I²C Interface Timing Specifications

Reference	Characteristics	Min	Max	Unit
1	Clock frequency	–	100	kHz
			400	
			800	
			1000	
2	START condition setup time	650	–	ns
3	START condition hold time	280	–	ns
4	Clock low time	650	–	ns
5	Clock high time	280	–	ns
6	Data input hold time[20]	0	–	ns
7	Data input setup time	100	–	ns
8	STOP condition setup time	280	–	ns
9	Output valid from clock	–	400	ns
10	Bus free time[21]	650	–	ns

Figure 16. I²C Interface Timing Diagram

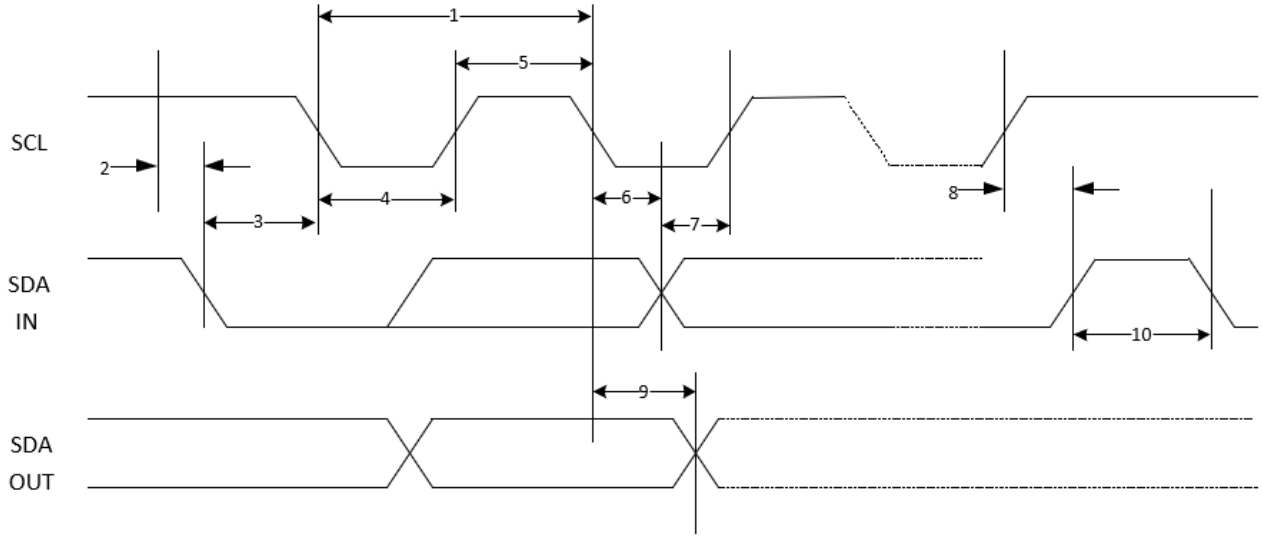

Notes
20. As a transmitter, 125 ns of delay is provided to bridge the undefined region of the falling edge of SCL to avoid unintended generation of START or STOP conditions.
21. Time that the bus must be free before a new transaction can start.

Downloaded from Arrow.com.

PCM Interface Timing

Short Frame Sync, Master Mode

Figure 17. PCM Timing Diagram (Short Frame Sync, Master Mode)

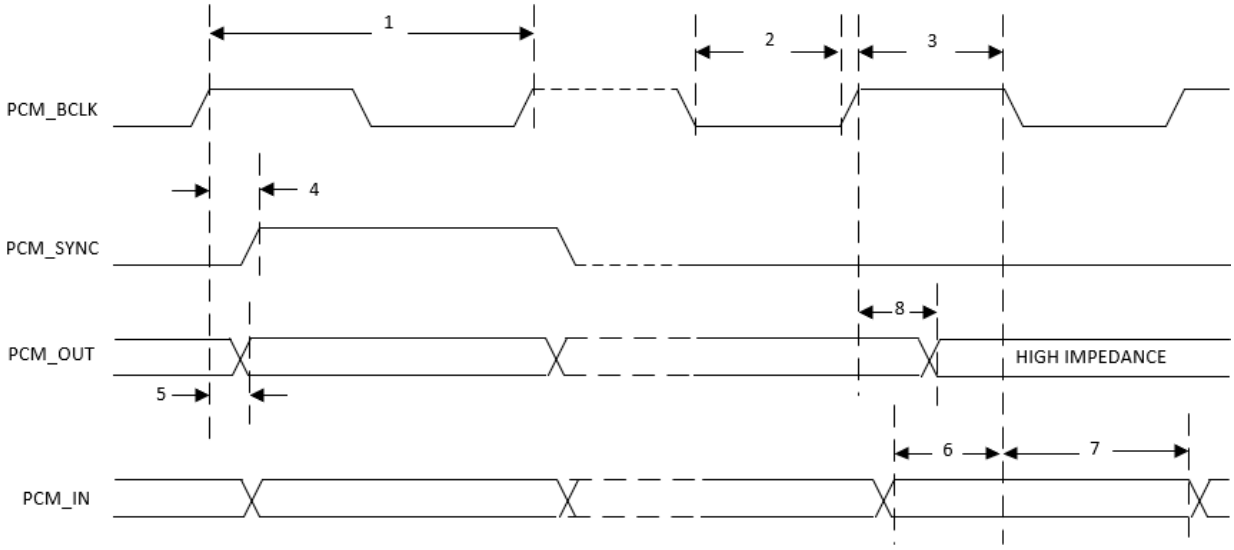

Table 21. PCM Interface Timing Specifications (Short Frame Sync, Master Mode)

Reference	Characteristics	Minimum	Typical	Maximum	Unit
1	PCM bit clock frequency	–	–	12	MHz
2	PCM bit clock LOW	41.0	–	–	ns
3	PCM bit clock HIGH	41.0	–	–	ns
4	PCM_SYNC delay	0	–	25.0	ns
5	PCM_OUT delay	0	–	25.0	ns
6	PCM_IN setup	8.0	–	–	ns
7	PCM_IN hold	8.0	–	–	ns
8	Delay from rising edge of PCM_BCLK during last bit period to PCM_OUT becoming high impedance	0	–	25.0	ns

Downloaded from Arrow.com.

Short Frame Sync, Slave Mode

Figure 18. PCM Timing Diagram (Short Frame Sync, Slave Mode)

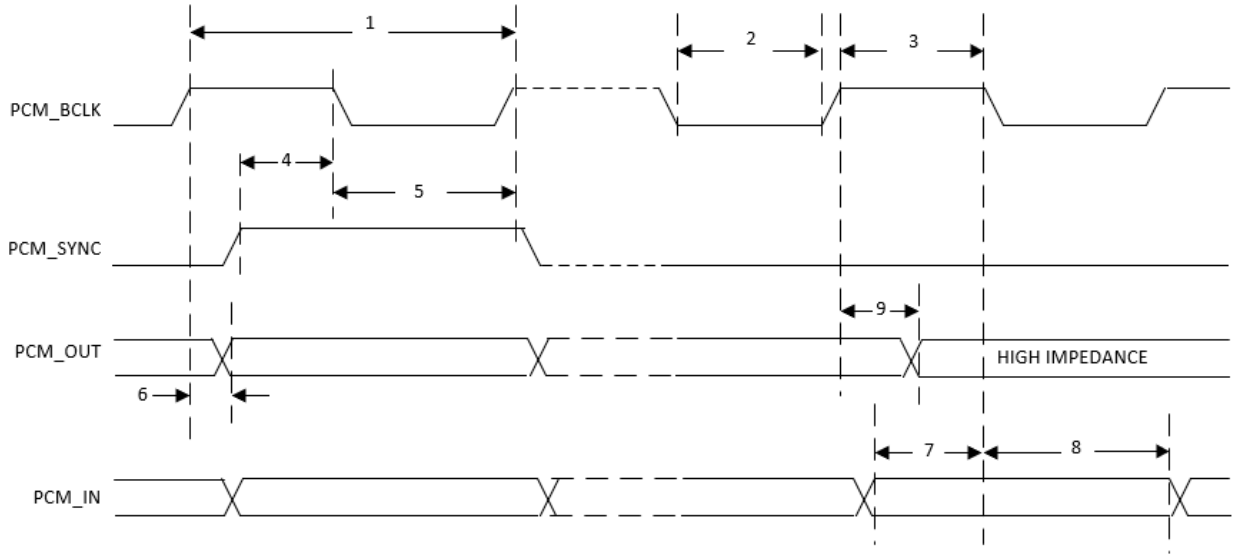

Table 22. PCM Interface Timing Specifications (Short Frame Sync, Slave Mode)

Reference	Characteristics	Minimum	Typical	Maximum	Unit
1	PCM bit clock frequency	–	–	12.0	MHz
2	PCM bit clock LOW	41.0	–	–	ns
3	PCM bit clock HIGH	41.0	–	–	ns
4	PCM_SYNC setup	8.0	–	–	ns
5	PCM_SYNC hold	8.0	–	–	ns
6	PCM_OUT delay	0	–	25.0	ns
7	PCM_IN setup	8.0	–	–	ns
8	PCM_IN hold	8.0	–	–	ns
9	Delay from rising edge of PCM_BCLK during last bit period to PCM_OUT becoming high impedance	0	–	25.0	ns

Downloaded from Arrow.com.

Long Frame Sync, Master Mode

Figure 19. PCM Timing Diagram (Long Frame Sync, Master Mode)

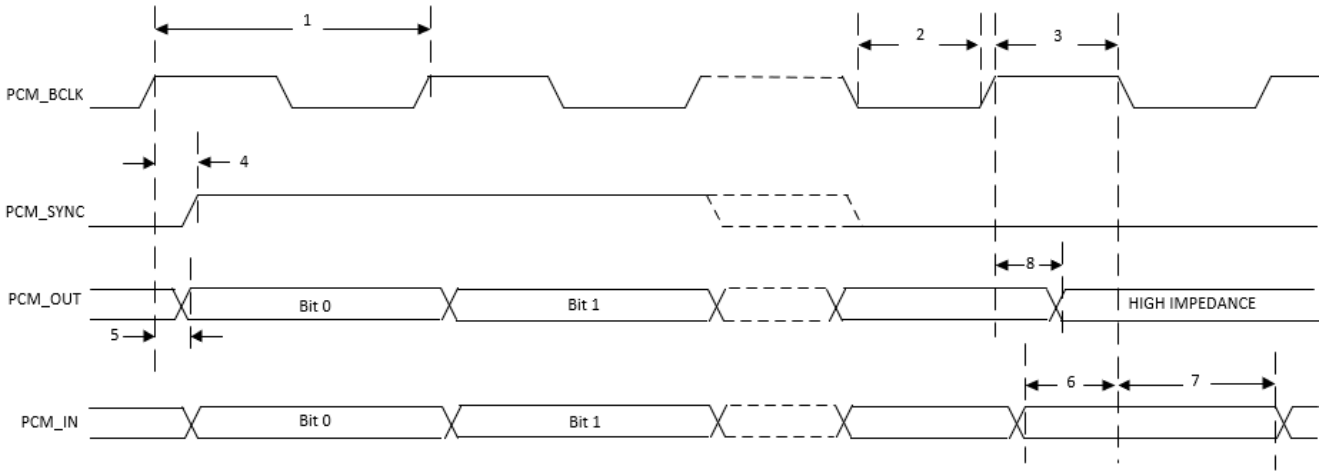

Table 23. PCM Interface Timing Specifications (Long Frame Sync, Master Mode)

Reference	Characteristics	Minimum	Typical	Maximum	Unit
1	PCM bit clock frequency	–	–	12	MHz
2	PCM bit clock LOW	41.0	–	–	ns
3	PCM bit clock HIGH	41.0	–	–	ns
4	PCM_SYNC delay	0	–	25.0	ns
5	PCM_OUT delay	0	–	25.0	ns
6	PCM_IN setup	8.0	–	–	ns
7	PCM_IN hold	8.0	–	–	ns
8	Delay from rising edge of PCM_BCLK during last bit period to PCM_OUT becoming high impedance	0	–	25.0	ns

Downloaded from Arrow.com.

Long Frame Sync, Slave Mode

Figure 20. PCM Timing Diagram (Long Frame Sync, Slave Mode)

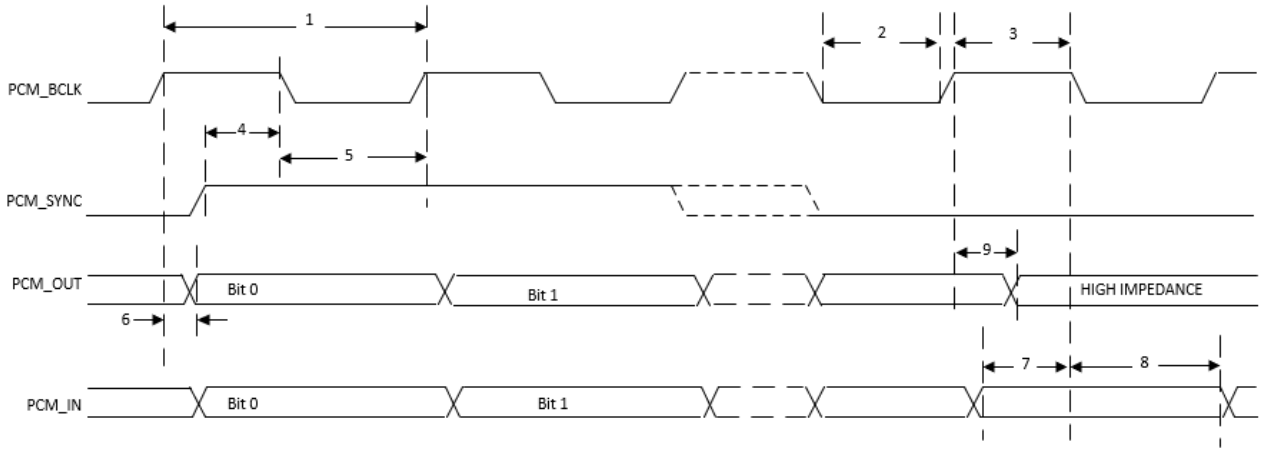

Table 24. PCM Interface Timing Specifications (Long Frame Sync, Slave Mode)

Reference	Characteristics	Minimum	Typical	Maximum	Unit
1	PCM bit clock frequency	–	–	12	MHz
2	PCM bit clock LOW	41.0	–	–	ns
3	PCM bit clock HIGH	41.0	–	–	ns
4	PCM_SYNC setup	8.0	–	–	ns
5	PCM_SYNC hold	8.0	–	–	ns
6	PCM_OUT delay	0	–	25.0	ns
7	PCM_IN setup	8.0	–	–	ns
8	PCM_IN hold	8.0	–	–	ns
9	Delay from rising edge of PCM_BCLK during last bit period to PCM_OUT becoming high impedance	0	–	25.0	ns

Downloaded from Arrow.com.

I^2S Interface Timing

The I^2S interface supports both master and slave modes. The I^2S signals are:

I^2S clock: I^2S SCK

I^2S Word Select: I^2S WS

I^2S Data Out: I^2S SDO

I^2S Data In: I^2S SDI

I^2S SCK and I^2S WS become outputs in master mode and inputs in slave mode, while I^2S SDO always stays as an output. The channel word length is 16 bits and the data is justified so that the MSB of the left-channel data is aligned with the MSB of the I^2S bus, per the I^2S specification. The MSB of each data word is transmitted one bit clock cycle after the I^2S WS transition, synchronous with the falling edge of bit clock. Left-channel data is transmitted when I^2S WS is low, and right-channel data is transmitted when I^2S WS is high. Data bits sent by the CYBT-343026-01 are synchronized with the falling edge of I2S_SCK and should be sampled by the receiver on the rising edge of I2S_SSCK.

The clock rate in master mode is either of the following:

48 kHz x 32 bits per frame = 1.536 MHz

48 kHz x 50 bits per frame = 2.400 MHz

Downloaded from Arrow.com.

The master clock is generated from the input reference clock using a N/M clock divider. In the slave mode, any clock rate is supported to a maximum of 3.072 MHz. Timing values specified in Table 25 are relative to high and low threshold levels.

Table 25. Timing for I²S Transmitters and Receivers

	Transmitter				Receiver				
	Lower Limit		Upper Limit		Lower Limit		Upper Limit		
	Min	Max	Min	Max	Min	Max	Min	Max	Notes
Clock Period T	T_{tr}	–	–	–	T_r	–	–	–	Note 22
Master Mode: Clock generated by transmitter or receiver									
HIGH t_{HC}	$0.35T_{tr}$	–	–	–	$0.35T_{tr}$	–	–	–	Note 23
LOWt_{LC}	$0.35T_{tr}$	–	–	–	$0.35T_{tr}$	–	–	–	Note 23
Slave Mode: Clock accepted by transmitter or receiver									
HIGH t_{HC}	–	$0.35T_{tr}$	–	–	–	$0.35T_{tr}$	–	–	Note 24
LOW t_{LC}	–	$0.35T_{tr}$	–	–	–	$0.35T_{tr}$	–	–	Note 24
Rise time t_{RC}	–	–	$0.15T_{tr}$	–	–	–		–	Note 25
Transmitter									
Delay t_{dtr}	–	–	–	0.8T	–	–	–	–	Note 26
Hold time t_{htr}	0	–	–	–	–	–	–	–	Note 26
Receiver									
Setup time t_{sr}	–	–	–	–	–	$0.2T_r$	–	–	Note 27
Hold time t_{hr}	–	–	–	–	–	0	–	–	Note 27

Note: The time periods specified in Figure 21 and Figure 22 are defined by the transmitter speed. The receiver specifications must match transmitter performance.

Notes

22. The system clock period T must be greater than Ttr and Tr because both the transmitter and receiver have to be able to handle the data transfer rate.
23. At all data rates in master mode, the transmitter or receiver generates a clock signal with a fixed mark/space ratio. For this reason, tHC and tLC are specified with respect to T.
24. In slave mode, the transmitter and receiver need a clock signal with minimum HIGH and LOW periods so that they can detect the signal. So long as the minimum periods are greater than 0.35Tr, any clock that meets the requirements can be used.
25. Because the delay (tdtr) and the maximum transmitter speed (defined by Ttr) are related, a fast transmitter driven by a slow clock edge can result in tdtr not exceeding tRC which means thtr becomes zero or negative. Therefore, the transmitter has to guarantee that thtr is greater than or equal to zero, so long as the clock rise-time tRC is not more than tRCmax, where tRCmax is not less than 0.15Ttr.
26. To allow data to be clocked out on a falling edge, the delay is specified with respect to the rising edge of the clock signal and T, always giving the receiver sufficient setup time.
27. The data setup and hold time must not be less than the specified receiver setup and hold time.

Downloaded from Arrow.com.

Figure 21. I²S Transmitter Timing

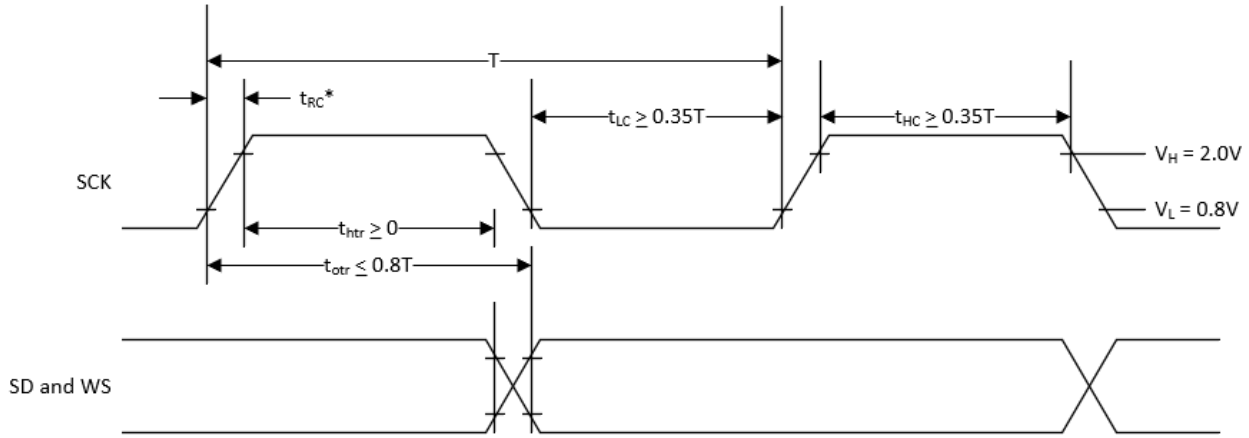

T = Clock period
T_{tr} = Minimum allowed clock period for transmitter
$T = T_{tr}$
* t_{RC} is only relevant for transmitters in slave mode.

Figure 22. I²S Receiver Timing

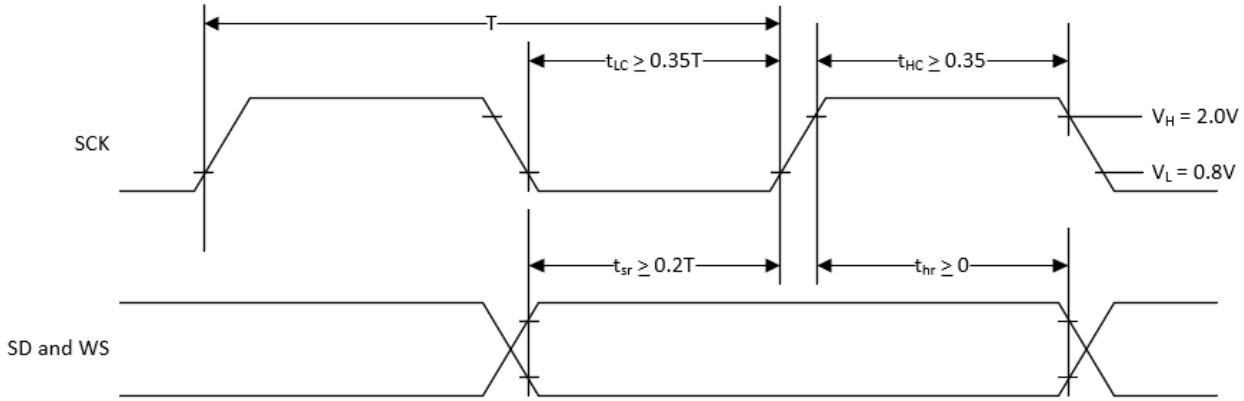

T = Clock period
T_r = Minimum allowed clock period for transmitter
$T > T_r$

Downloaded from Arrow.com.

Environmental Specifications

Environmental Compliance

This CYBT-343026-01 Bluetooth LE module is produced in compliance with the Restriction of Hazardous Substances (RoHS) and Halogen-Free (HF) directives. The Cypress module and components used to produce this module are RoHS and HF compliant.

RF Certification

The CYBT-343026-01 module will be certified under the following RF certification standards at production release.

FCC: WAP3026

CE

IC: 7922A-3026

MIC: 203-JN0721

Safety Certification

The CYBT-343026-01 module complies with the following safety regulations:

CSA

TUV

Environmental Conditions

Table 26 describes the operating and storage conditions for the Cypress Bluetooth LE module.

Table 26. Environmental Conditions for CYBT-343026-01

Description	Minimum Specification	Maximum Specification
Operating temperature	–30 °C	85 °C
Operating humidity (relative, non-condensation)	5%	85%
Thermal ramp rate	–	3 °C/minute
Storage temperature	–40 °C	85 °C
Storage temperature and humidity	–	85 °C at 85%
ESD: Module integrated into end system Components[28]	–	15 kV Air 2.0 kV Contact

ESD and EMI Protection

Exposed components require special attention to ESD and electromagnetic interference (EMI).

A grounded conductive layer inside the device enclosure is suggested for EMI and ESD performance. Any openings in the enclosure near the module should be surrounded by a grounded conductive layer to provide ESD protection and a low-impedance path to ground.

Device Handling: Proper ESD protocol must be followed in manufacturing to ensure component reliability.

Note
28. This does not apply to the RF pins (ANT).

Downloaded from Arrow.com.

Regulatory Information

FCC

FCC NOTICE:

The device CYBT-343026-01 complies with Part 15 of the FCC Rules. The device meets the requirements for modular transmitter approval as detailed in FCC public Notice DA00-1407.transmitter Operation is subject to the following two conditions: (1) This device may not cause harmful interference, and (2) This device must accept any interference received, including interference that may cause undesired operation.

CAUTION:

The FCC requires the user to be notified that any changes or modifications made to this device that are not expressly approved by Cypress Semiconductor may void the user's authority to operate the equipment.

This equipment has been tested and found to comply with the limits for a Class B digital device, pursuant to Part 15 of the FCC Rules. These limits are designed to provide reasonable protection against harmful interference in a residential installation. This equipment generates uses and can radiate radio frequency energy and, if not installed and used in accordance with the instructions, may cause harmful interference to radio communications. However, there is no guarantee that interference will not occur in a particular installation. If this equipment does cause harmful interference to radio or television reception, which can be determined by turning the equipment off and on, the user is encouraged to try to correct the interference by one or more of the following measures:

Reorient or relocate the receiving antenna.

Increase the separation between the equipment and receiver.

Connect the equipment into an outlet on a circuit different from that to which the receiver is connected.

Consult the dealer or an experienced radio/TV technician for help

LABELING REQUIREMENTS:

The Original Equipment Manufacturer (OEM) must ensure that FCC labeling requirements are met. This includes a clearly visible label on the outside of the OEM enclosure specifying the appropriate Cypress Semiconductor FCC identifier for this product as well as the FCC Notice above. The FCC identifier is FCC ID: WAP3026.

In any case the end product must be labeled exterior with “Contains FCC ID: WAP3026“

ANTENNA WARNING:

This device is tested with a standard SMA connector and with the antenna listed in Table 6 on page 13. When integrated in the OEMs product, these fixed antennas require installation preventing end-users from replacing them with non-approved antennas. Any antenna not in the following table must be tested to comply with FCC Section 15.203 for unique antenna connectors and Section 15.247 for emissions.

RF EXPOSURE:

To comply with FCC RF Exposure requirements, the Original Equipment Manufacturer (OEM) must ensure to install the approved antenna in the previous.

The preceding statement must be included as a CAUTION statement in manuals, for products operating with the approved antenna in Table 6 on page 13, to alert users on FCC RF Exposure compliance. Any notification to the end user of installation or removal instructions about the integrated radio module is not allowed.

The radiated output power of CYBT-343026-01 with the trace antenna is far below the FCC radio frequency exposure limits. Nevertheless, use CYBT-343026-01 in such a manner that minimizes the potential for human contact during normal operation.

End users may not be provided with the module installation instructions. OEM integrators and end users must be provided with transmitter operating conditions for satisfying RF exposure compliance.

Downloaded from Arrow.com.

ISED

Innovation, Science and Economic Development Canada (ISED) Certification

CYBT-343026-01 is licensed to meet the regulatory requirements of Innovation, Science and Economic Development Canada (ISED),

License: IC: 7922A-3026

Manufacturers of mobile, fixed, or portable devices incorporating this module are advised to clarify any regulatory questions and ensure compliance for SAR and/or RF exposure limits. Users can obtain Canadian information on RF exposure and compliance from www.ic.gc.ca.

This device has been designed to operate with the antennas listed in Table 6 on page 13, having a maximum gain of –0.5 dBi. Antennas not included in this list or having a gain greater than –0.5 dBi are strictly prohibited for use with this device. The required antenna impedance is 50 ohms. The antenna used for this transmitter must not be co-located or operating in conjunction with any other antenna or transmitter.

ISED NOTICE:

The device CYBT-343026-01 including the built-in trace antenna complies with Canada RSS-GEN Rules. The device meets the requirements for modular transmitter approval as detailed in RSS-GEN. Operation is subject to the following two conditions: (1) This device may not cause harmful interference, and (2) This device must accept any interference received, including interference that may cause undesired operation.

L'appareil CYBT-343026-01, y compris l'antenne intégrée, est conforme aux Règles RSS-GEN de Canada. L'appareil répond aux exigences d'approbation de l'émetteur modulaire tel que décrit dans RSS-GEN. L'opération est soumise aux deux conditions suivantes: (1) Cet appareil ne doit pas causer d'interférences nuisibles, et (2) Cet appareil doit accepter toute interférence reçue, y compris les interférences pouvant entraîner un fonctionnement indésirable.

ISED INTERFERENCE STATEMENT FOR CANADA

This device complies with Innovation, Science and Economic Development (ISED) Canada licence-exempt RSS standard(s). Operation is subject to the following two conditions: (1) this device may not cause interference, and (2) this device must accept any interference, including interference that may cause undesired operation of the device.

Cet appareil est conforme à la norme sur l'innovation, la science et le développement économique (ISED) norme RSS exempte de licence. L'exploitation est autorisée aux deux conditions suivantes : (1) l'appareil ne doit pas produire de brouillage, et (2) l'utilisateur de l'appareil doit accepter tout brouillage radioélectrique subi, même si le brouillage est susceptible d'en compromettre le fonctionnement.

ISED RADIATION EXPOSURE STATEMENT FOR CANADA

This equipment complies with ISED radiation exposure limits set forth for an uncontrolled environment. This equipment should be installed and operated with a minimum distance of 10 mm between the radiator and your body.

Cet équipement est conforme aux limites d'exposition aux radiations ISED prévues pour un environnement incontrôlé. Cet équipement doit être installé et utilisé avec un minimum de 10 mm de distance entre la source de rayonnement et votre corps.

LABELING REQUIREMENTS:

The Original Equipment Manufacturer (OEM) must ensure that ISED labeling requirements are met. This includes a clearly visible label on the outside of the OEM enclosure specifying the appropriate Cypress Semiconductor IC identifier for this product as well as the ISED Notices above. The IC identifier is 7922A-3026. In any case, the end product must be labeled in its exterior with “Contains IC: 7922A-3026“

Downloaded from Arrow.com.

European Declaration of Conformity

Hereby, Cypress Semiconductor declares that the Bluetooth module CYBT-343026-01 complies with the essential requirements and other relevant provisions of Directive 2014. As a result of the conformity assessment procedure described in Annex III of the Directive 2014, the end-customer equipment should be labeled as follows:

All versions of the CYBT-343026-01 in the specified reference design can be used in the following countries: Austria, Belgium, Cyprus, Czech Republic, Denmark, Estonia, Finland, France, Germany, Greece, Hungary, Ireland, Italy, Latvia, Lithuania, Luxembourg, Malta, Poland, Portugal, Slovakia, Slovenia, Spain, Sweden, The Netherlands, the United Kingdom, Switzerland, and Norway.

MIC Japan

CYBT-343026-01 is certified as a module with certification number 203-JN0721. End products that integrate CYBT-343026-01 do not need additional MIC Japan certification for the end product.

End product can display the certification label of the embedded module.

Figure 23. MIC Label

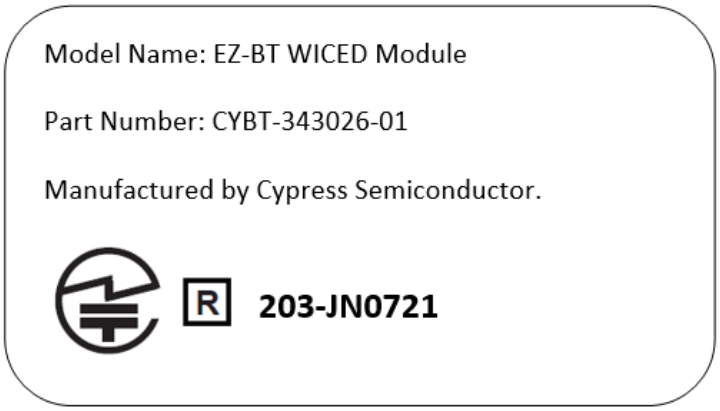

China

CYBT-343026-01 has received radio type approval certification from State Radio Regulation Committee (SRRC). Integration of this module into a final product does not require additional radio certification, provided Installation instructions are followed and no modifications of the module are allowed.

LABELING REQUIREMENTS:

On CYBT-343026-01, due to the limited module size (12.0 mm x 15.5 mm) the CMIIT ID is displayed in the data sheet and cannot be displayed on the module label:

CMIIT ID: 2018DJ5733

When Host system is using an approved Full Modular Approval (FMA) radio: The host must carry a label containing the statement “This device contains SRRC approved Radio module CMIIT ID: 2018DJ5733”.

Downloaded from Arrow.com.

KC Korea

CYBT-343026-01 is certified for use in Korea with certificate number R-C-Cyp-3026.

한국 인증 세부정보:

1. 제품명(모델명): 특정소출력무선기기(무선데이터통신시스템용 무선기기), CYBT-343026-01
2. 인증 번호: R-C-Cyp-3026
3. 라이선스 소유자: Cypress Semiconductor Corporation
4. 제조일자: 2020-03-27
5. 제조업체/국가명:Cypress Semiconductor Corporation/중국

해당 무선설비는 전파혼신 가능성이 있으므로 인명안전과 관련된 서비스는 할 수 없습니다.

NCC Taiwan

NCC NOTICE:

The CYBT-343026-01 module is labeled with its own NCC mark and certificate number as below:

CCAH20LP2550T0

The user's manual should contain below warning (for RF device) in traditional Chinese:

經型式認證合格之低功率射頻電機，非經許可，公司、商號或使用者均不得擅自變更頻率、加大功率或變更原設計之特性及功能。
低功率射頻電機之使用不得影響飛航安全及干擾合法通信；經發現有干擾現象時，應立即停用，並改善至無干擾時方得繼續使用。
前項合法通信，指依電信法規定作業之無線電通信。低功率射頻電機須忍受合法通信或工業、科學及醫療用點播輻射性電機設備之干擾。

LABELING REQUIREMENTS:

本模組於取得認證后將依規定於模組本體標示合格標籤，並要求最終產品平台廠商(OEM Integrator)於最終產品平台(End Product)上標示：

“本產品內含射頻模組，其NCC型式認證號碼為： CCAH20LP2550T0 ”

Downloaded from Arrow.com.

Anatel Brazil

CYBT-343026-01 has type approval in Brazil with identification number 10932-20-11443.

Módulo: CYBT-343026-01

10932-20-11443

"Este equipamento não tem direito à proteção contra interferência prejudicial e não pode causar interferência em sistemas devidamente autorizados."

Downloaded from Arrow.com.

Packaging

Table 27. Solder Reflow Peak Temperature

Module Part Number	Package	Maximum Peak Temperature	Maximum Time at Peak Temperature	No. of Cycles
CYBT-343026-01	24-pad SMT	260 °C	30 seconds	2

Table 28. Package Moisture Sensitivity Level (MSL), IPC/JEDEC J-STD-2

Module Part Number	Package	MSL
CYBT-343026-01	24-pad SMT	MSL 3

The CYBT-343026-01 is offered in tape and reel packaging. Figure 24 details the tape dimensions used for the CYBT-343026-01.

Figure 24. CYBT-343026-01 Tape Dimensions

Item	W	A_0	B_0	K_0	P_1	F	E	D_0	D_1	P_0	P_2	T
Measurement	$24.0^{+0.30}_{-0.30}$	$12.40^{+0.10}_{-0.10}$	$15.90^{+0.10}_{-0.10}$	$2.35^{+0.10}_{-0.10}$	$20.0^{+0.10}_{-0.10}$	$11.5^{+0.10}_{-0.10}$	$1.75^{+0.10}_{-0.10}$	$1.50^{+0.10}_{-0.00}$	$1.50^{+0.10}_{-0.10}$	$4.00^{+0.10}_{-0.10}$	$2.00^{+0.10}_{-0.10}$	$0.30^{+0.05}_{-0.05}$

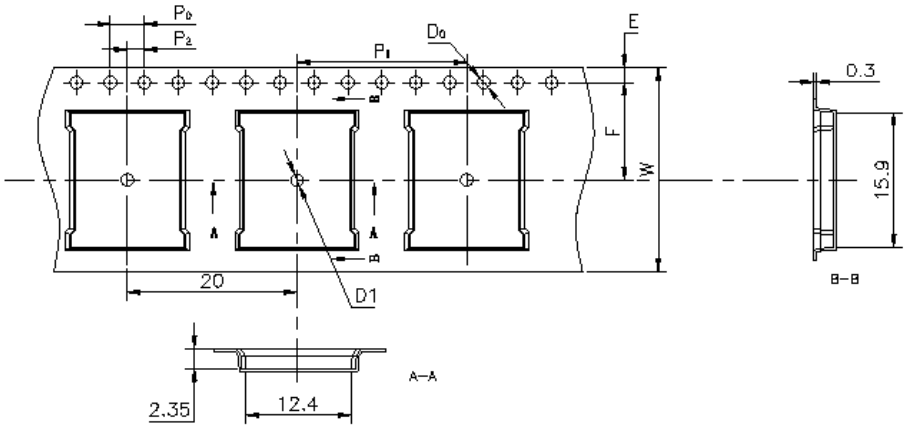

Figure 25 details the orientation of the CYBT-343026-01 in the tape as well as the direction for unreeling.

Figure 25. Component Orientation in Tape and Unreeling Direction

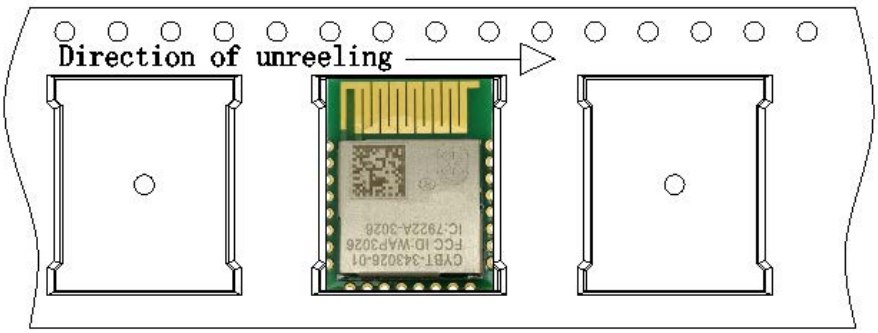

Downloaded from Arrow.com.

Figure 26 details reel dimensions used for the CYBT-343026-01.

Figure 26. Reel Dimensions

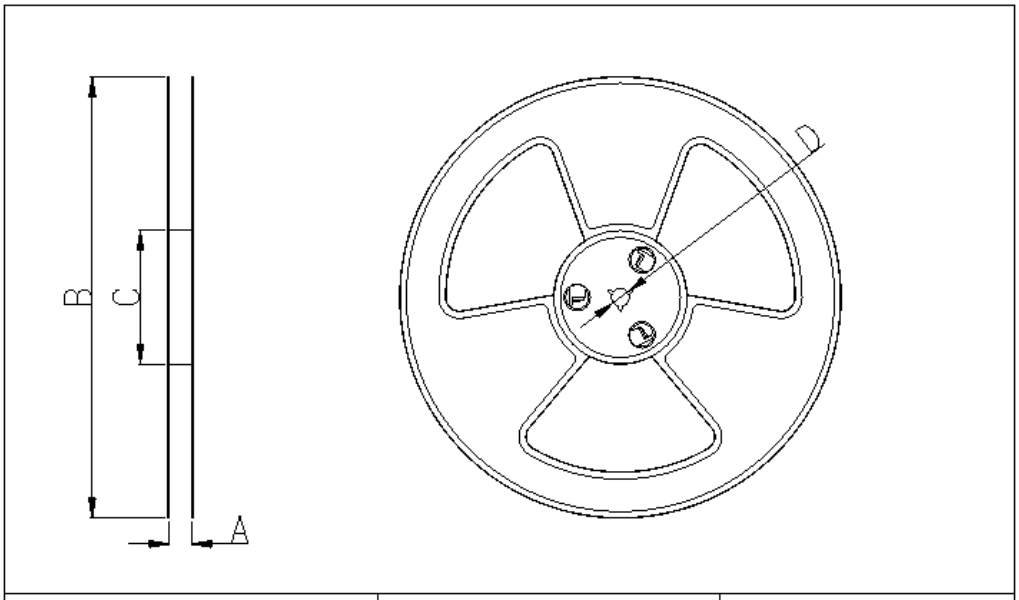

Index	NOTE	Dimension	Tolerance	
A	Inside Width	24.4	+2.0mm	−0.0mm
B	Reel Diameter	254.00	+2.0mm	−2.0mm
C	Outer Axis Diameter	100.00	+2.0mm	−2.0mm
D	Inner Axis Diameter	13.20	+0.3mm	−0.2mm

The CYBT-343026-01 is designed to be used with pick-and-place equipment in an SMT manufacturing environment. The center-of-mass for the CYBT-343026-01 is detailed in Figure 27.

Figure 27. CYBT-343026-01 Center of Mass

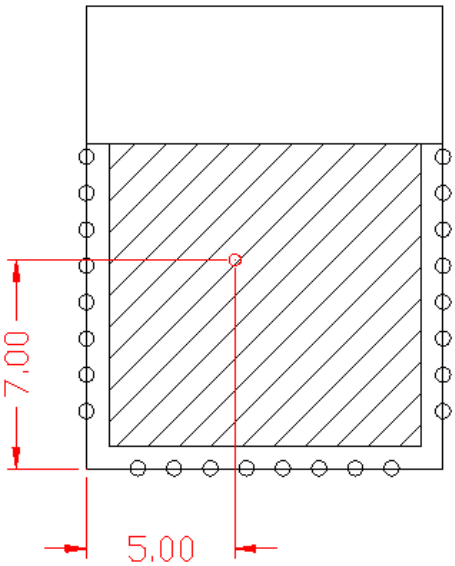

Downloaded from Arrow.com.

Ordering Information

Table 29 lists the CYBT-343026-01 part number and features. Table 30 lists the reel shipment quantities for the CYBT-343026-01.

Table 29. Ordering Information

Part Number	CPU Speed (MHz)	Flash Size (KB)	RAM Size (KB)	UART	I^2C (BSC)	PWM	Package	Packaging
CYBT-343026-01	24	512	352	Yes	Yes	4	24-SMT	Tape and Reel

Table 30. Tape and Reel Package Quantity and Minimum Order Amount

Description	Minimum Reel Quantity	Maximum Reel Quantity	Comments
Reel Quantity	500	500	Ships in 500 unit reel quantities.
Minimum Order Quantity (MOQ)	500	–	–
Order Increment (OI)	500	–	–

The CYBT-343026-01 is offered in tape and reel packaging. The CYBT-343026-01 ships in a reel size of 500.

For additional information and a complete list of Cypress Semiconductor Wireless products, contact your local Cypress sales representative. To locate the nearest Cypress office, visit our website.

U.S. Cypress Headquarters Address	198 Champion Court, San Jose, CA 95134
U.S. Cypress Headquarter Contact Info	(408) 943-2600
Cypress website address	http://www.cypress.com

Downloaded from Arrow.com.

Acronyms

Table 31. Acronyms Used in this Document

Acronym	Description	Acronym	Description
ADC	analog-to-digital converter	IDE	integrated development environment
ALU	arithmetic logic unit	I^2C, or IIC	Inter-Integrated Circuit, a communications protocol
AMUXBUS	analog multiplexer bus	IC	Industry Canada
API	application programming interface	IIR	infinite impulse response, see also FIR
ARM®	advanced RISC machine, a CPU architecture	ILO	internal low-speed oscillator, see also IMO
BLE	Bluetooth Low Energy	IMO	internal main oscillator, see also ILO
Bluetooth SIG	Bluetooth Special Interest Group	INL	integral nonlinearity, see also DNL
BW	bandwidth	I/O	input/output, see also GPIO, DIO, SIO, USBIO
CAN	Controller Area Network, a communications protocol	IPOR	initial power-on reset
CE	European Conformity	IPSR	interrupt program status register
CSA	Canadian Standards Association	IRQ	interrupt request
CMRR	common-mode rejection ratio	ITM	instrumentation trace macrocell
CPU	central processing unit	KC	Korea Certification
CRC	cyclic redundancy check, an error-checking protocol	LCD	liquid crystal display
ECC	error correcting code	LIN	Local Interconnect Network, a communications protocol.
ECO	external crystal oscillator	LNA	low noise amplifier
EEPROM	electrically erasable programmable read-only memory	LR	link register
EMI	electromagnetic interference	LUT	lookup table
EMIF	external memory interface	LVD	low-voltage detect, see also LVI
EOC	end of conversion	LVI	low-voltage interrupt, see also HVI
EOF	end of frame	LVTTL	low-voltage transistor-transistor logic
ESD	electrostatic discharge	MAC	multiply-accumulate
FCC	Federal Communications Commission	MCU	microcontroller unit
FET	field-effect transistor	MIC	Ministry of Internal Affairs and Communications (Japan)
FIR	finite impulse response, see also IIR	MISO	master-in slave-out
FPB	flash patch and breakpoint	NC	no connect
FS	full-speed	NMI	nonmaskable interrupt
GPIO	general-purpose input/output, applies to a PSoC pin	NRZ	non-return-to-zero
HCI	host controller interface	NVIC	nested vectored interrupt controller
HVI	high-voltage interrupt, see also LVI, LVD	NVL	nonvolatile latch, see also WOL
IC	integrated circuit	Opamp	operational amplifier
IDAC	current DAC, see also DAC, VDAC	PA	power amplifier

Downloaded from Arrow.com.

Table 31. Acronyms Used in this Document (continued)

Acronym	Description	Acronym	Description
PAL	programmable array logic, see also PLD	SOF	start of frame
PC	program counter	S/H	sample and hold
PCB	printed circuit board	SINAD	signal to noise and distortion ratio
PGA	programmable gain amplifier	SIO	special input/output, GPIO with advanced features. See GPIO.
PHUB	peripheral hub	SMT	surface-mount technology; a method for producing electronic circuitry in which the components are placed directly onto the surface of PCBs
PHY	physical layer	SPI	Serial Peripheral Interface, a communications protocol
PICU	port interrupt control unit	SR	slew rate
PLA	programmable logic array	SRAM	static random access memory
PLD	programmable logic device, see also PAL	SRES	software reset
PLL	phase-locked loop	STN	super twisted nematic
PMDD	package material declaration data sheet	SWD	serial wire debug, a test protocol
POR	power-on reset	SWV	single-wire viewer
PRES	precise power-on reset	TD	transaction descriptor, see also DMA
PRS	pseudo random sequence	THD	total harmonic distortion
PS	port read data register	TIA	transimpedance amplifier
PSoC®	Programmable System-on-Chip™	TN	twisted nematic
PSRR	power supply rejection ratio	TRM	technical reference manual
PWM	pulse-width modulator	TTL	transistor-transistor logic
QDID	qualification design ID	TUV	Germany: Technischer Überwachungs-Verein (Technical Inspection Association)
RAM	random-access memory	TX	transmit
RISC	reduced-instruction-set computing	UART	Universal Asynchronous Transmitter Receiver, a communications protocol
RMS	root-mean-square	UDB	universal digital block
RTC	real-time clock	USB	Universal Serial Bus
RTL	register transfer language	USBIO	USB input/output, PSoC pins used to connect to a USB port
RTR	remote transmission request	VDAC	voltage DAC, see also DAC, IDAC
RX	receive	WDT	watchdog timer
SAR	successive approximation register	WOL	write once latch, see also NVL
SC/CT	switched capacitor/continuous time	WRES	watchdog timer reset
SCL	I^2C serial clock	XRES	external reset I/O pin
SDA	I^2C serial data	XTAL	crystal
SOC	start of conversion		

Downloaded from Arrow.com.

Document Conventions

Units of Measure

Table 32. Units of Measure

Symbol	Unit of Measure
°C	degrees Celsius
dB	decibel
dBm	decibel-milliwatts
fF	femtofarads
Hz	hertz
KB	1024 bytes
kbps	kilobits per second
Khr	kilohour
kHz	kilohertz
kΩ	kilo ohm
ksps	kilosamples per second
LSB	least significant bit
Mbps	megabits per second
MHz	megahertz
MΩ	mega-ohm
Msps	megasamples per second
µA	microampere
µF	microfarad
µH	microhenry
µs	microsecond
µV	microvolt
µW	microwatt
mA	milliampere
ms	millisecond
mV	millivolt
nA	nanoampere
ns	nanosecond
nV	nanovolt
Ω	ohm
pF	picofarad
ppm	parts per million
ps	picosecond
s	second
sps	samples per second
sqrtHz	square root of hertz
V	volt

Downloaded from Arrow.com.

Document History Page

Document Title: CYBT-343026-01, EZ-BT™ WICED® Module Document Number: 002-19525			
Revision	**ECN**	**Submission Date**	**Description of Change**
**	5796061	07/03/2017	Preliminary datasheet for CYBT-343026-01 module.
*A	5866701	09/08/2017	Updated Document Title to read as “CYBT-343026-01 EZ-BT™ WICED Module”. Remove CYBT-143038-01 part related information in all instances across the document. Updated Regulatory Information: Update MIC Japan (Updated part number).
*B	6155763	04/24/2018	Change status from “Preliminary” to “Final”. Update Module Description to specify Bluetooth QDID and Declaration ID. Update References to add additional document references. Update Development Environments to remove EZ-Serial reference. Update Table 4 to display silicon Port-Pin name instead of only Pin identifier. Added Footnote 5 to Table 4 to state that any GPIO can be used for SPI1_CS in master mode. Update Figure 9 to improve image quality. Update Bluetooth Baseband Core to improve readability. Renamed Peripheral Transport Unit to Peripheral and Communication Interfaces Update Table 9. Update Table 13 to specify current consumption of silicon and module solutions. Update Chipset RF Specifications to specify as Chipset. Update Table 21, Table 22, Table 23, and Table 24 to specify PCM interface timing. Added Figure 21 and Figure 22. Update Figure 23 to improve image quality. Update Figure 24 to add tape drawing. Update Figure 25 to add Component Orientation reference drawing. Update Figure 26 to add Reel Dimension drawing. Update Figure 27 to add Center of Mass drawing. Update Table 30 to specify Reel Quantity, MOQ, and OI.
*C	6366705	10/26/2018	Updated General Description: Updated Module Description: Updated description. Updated Regulatory Information: Added China.
*D	6469309	01/31/2019	Updated Integrated Radio Transceiver: Updated Transmitter Path: Updated Power Amplifier: Updated description. Updated Electrical Characteristics: Updated Table 13 (Swapped details in “Parameter” and “Description” columns corresponding to TXPeak and RXPeak parameters).
*E	6492039	02/22/2019	Updated File Properties. No technical updates.
*F	6939975	07/31/2020	Updated Regulatory Information: Added KC Korea. Added NCC Taiwan. Added Anatel Brazil.
*G	7047762	12/17/2020	Replaced “Bluetooth Low Energy (BLE)” with “Bluetooth Low Energy” in all instances across the document. Replaced “BLE” with “Bluetooth LE” in all instances across the document.
*H	7096446	03/01/2021	Updated General Description: Updated Module Description: Updated description.
*I	8181044	06/15/2026	Removed Underwriters Laboratories, Inc. (UL): Filing E331901 specification in Safety Certification

Downloaded from Arrow.com.

Sales, Solutions, and Legal Information

Worldwide Sales and Design Support

Cypress maintains a worldwide network of offices, solution centers, manufacturer's representatives, and distributors. To find the office closest to you, visit us at Cypress Locations.

Products

Arm® Cortex® Microcontrollers	cypress.com/arm
Automotive	cypress.com/automotive
Clocks & Buffers	cypress.com/clocks
Interface	cypress.com/interface
Internet of Things	cypress.com/iot
Memory	cypress.com/memory
Microcontrollers	cypress.com/mcu
PSoC	cypress.com/psoc
Power Management ICs	cypress.com/pmic
Touch Sensing	cypress.com/touch
USB Controllers	cypress.com/usb
Wireless Connectivity	cypress.com/wireless

PSoC® Solutions

PSoC 1 | PSoC 3 | PSoC 4 | PSoC 5LP | PSoC 6 MCU

Cypress Developer Community

Community | Code Examples | Projects | Video | Blogs | Training | Components

Technical Support

cypress.com/support

© Cypress Semiconductor Corporation, 2017–2026. This document is the property of Cypress Semiconductor Corporation and its subsidiaries ("Cypress"). This document, including any software or firmware included or referenced in this document ("Software"), is owned by Cypress under the intellectual property laws and treaties of the United States and other countries worldwide. Cypress reserves all rights under such laws and treaties and does not, except as specifically stated in this paragraph, grant any license under its patents, copyrights, trademarks, or other intellectual property rights. If the Software is not accompanied by a license agreement and you do not otherwise have a written agreement with Cypress governing the use of the Software, then Cypress hereby grants you a personal, non-exclusive, nontransferable license (without the right to sublicense) (1) under its copyright rights in the Software (a) for Software provided in source code form, to modify and reproduce the Software solely for use with Cypress hardware products, only internally within your organization, and (b) to distribute the Software in binary code form externally to end users (either directly or indirectly through resellers and distributors), solely for use on Cypress hardware product units, and (2) under those claims of Cypress's patents that are infringed by the Software (as provided by Cypress, unmodified) to make, use, distribute, and import the Software solely for use with Cypress hardware products. Any other use, reproduction, modification, translation, or compilation of the Software is prohibited.

TO THE EXTENT PERMITTED BY APPLICABLE LAW, CYPRESS MAKES NO WARRANTY OF ANY KIND, EXPRESS OR IMPLIED, WITH REGARD TO THIS DOCUMENT OR ANY SOFTWARE OR ACCOMPANYING HARDWARE, INCLUDING, BUT NOT LIMITED TO, THE IMPLIED WARRANTIES OF MERCHANTABILITY AND FITNESS FOR A PARTICULAR PURPOSE. No computing device can be absolutely secure. Therefore, despite security measures implemented in Cypress hardware or software products, Cypress shall have no liability arising out of any security breach, such as unauthorized access to or use of a Cypress product. CYPRESS DOES NOT REPRESENT, WARRANT, OR GUARANTEE THAT CYPRESS PRODUCTS, OR SYSTEMS CREATED USING CYPRESS PRODUCTS, WILL BE FREE FROM CORRUPTION, ATTACK, VIRUSES, INTERFERENCE, HACKING, DATA LOSS OR THEFT, OR OTHER SECURITY INTRUSION (collectively, "Security Breach"). Cypress disclaims any liability relating to any Security Breach, and you shall and hereby do release Cypress from any claim, damage, or other liability arising from any Security Breach. In addition, the products described in these materials may contain design defects or errors known as errata which may cause the product to deviate from published specifications. To the extent permitted by applicable law, Cypress reserves the right to make changes to this document without further notice. Cypress does not assume any liability arising out of the application or use of any product or circuit described in this document. Any information provided in this document, including any sample design information or programming code, is provided only for reference purposes. It is the responsibility of the user of this document to properly design, program, and test the functionality and safety of any application made of this information and any resulting product. "High-Risk Device" means any device or system whose failure could cause personal injury, death, or property damage. Examples of High-Risk Devices are weapons, nuclear installations, surgical implants, and other medical devices. "Critical Component" means any component of a High-Risk Device whose failure to perform can be reasonably expected to cause, directly or indirectly, the failure of the High-Risk Device, or to affect its safety or effectiveness. Cypress is not liable, in whole or in part, and you shall and hereby do release Cypress from any claim, damage, or other liability arising from any use of a Cypress product as a Critical Component in a High-Risk Device. You shall indemnify and hold Cypress, its directors, officers, employees, agents, affiliates, distributors, and assigns harmless from and against all claims, costs, damages, and expenses, arising out of any claim, including claims for product liability, personal injury or death, or property damage arising from any use of a Cypress product as a Critical Component in a High-Risk Device. Cypress products are not intended or authorized for use as a Critical Component in any High-Risk Device except to the limited extent that (i) Cypress's published data sheet for the product explicitly states Cypress has qualified the product for use in a specific High-Risk Device, or (ii) Cypress has given you advance written authorization to use the product as a Critical Component in the specific High-Risk Device and you have signed a separate indemnification agreement.

Cypress, the Cypress logo, Spansion, the Spansion logo, and combinations thereof, WICED, PSoC, CapSense, EZ-USB, F-RAM, and Traveo are trademarks or registered trademarks of Cypress in the United States and other countries. For a more complete list of Cypress trademarks, visit cypress.com. Other names and brands may be claimed as property of their respective owners.

Downloaded from Arrow.com.