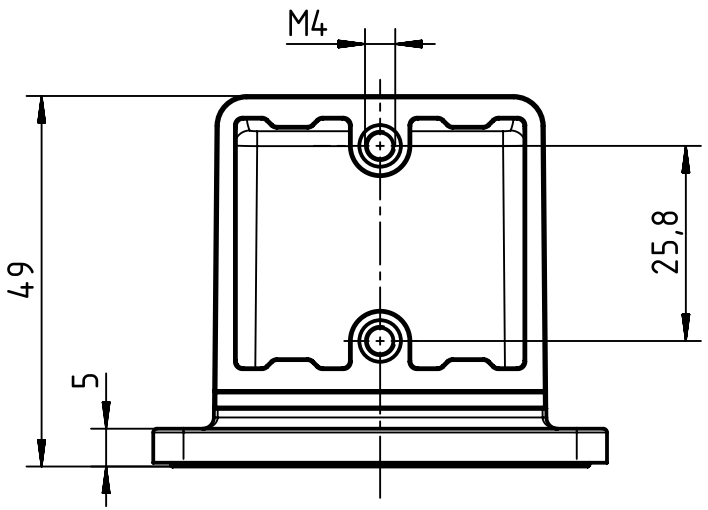

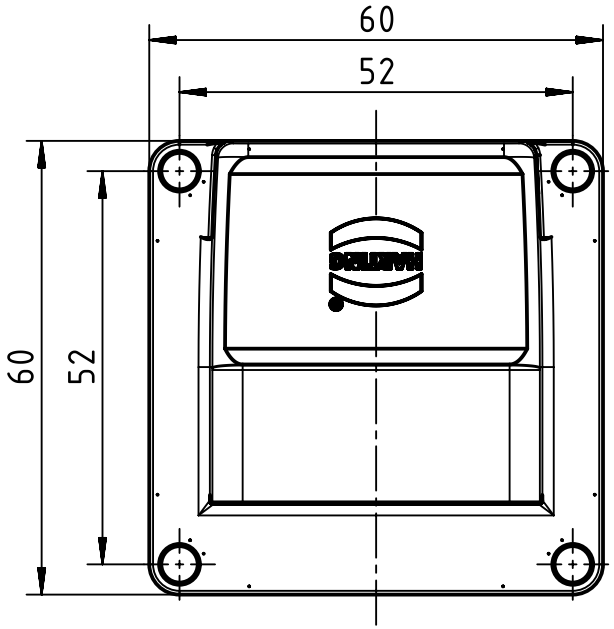

Panel cut out

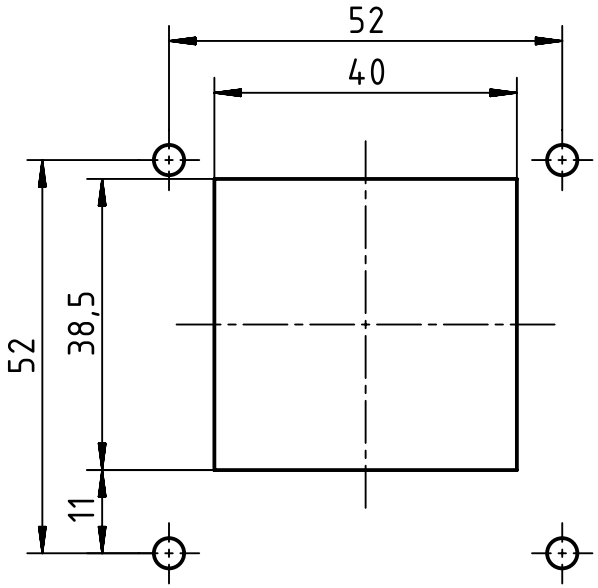

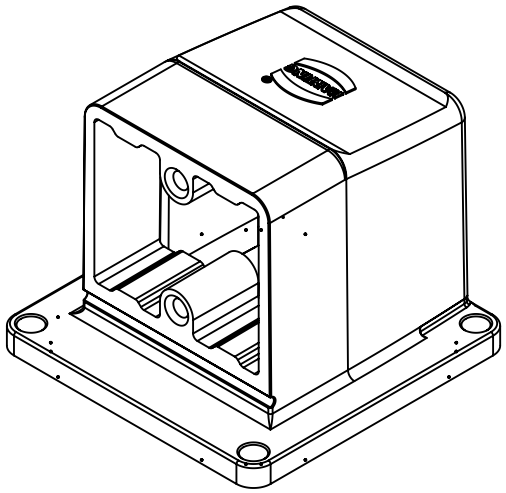

All Dimensions in mm Original Size DIN A4	Scale 1:1	Free size tol.		Ref. Sub.	
All rights reserved Department EL PD - CN	Created by LONGL	Inspected by WENE	Standardisation SCHMIDTM	Date 2016-02-03	State Final Release
HARTING Electric GmbH & Co. KG D-32339 Espelkamp	Title Han Modular Twin angled housing				Doc-Key / ECM-Nr. 100606593/UGD/002/A 500000099753
	Type TB	Number 09 14 002 0950		Rev. A	Page 1/1

Downloaded from Arrow.com.

A4