| DIALIGHT PART NO. | LED COLOR |
|---|---|
| 598-2000-107F | WHITE (X=0.30,Y=0.30) |
| 598-2000-102F | |
| 598-2005-107F | WHITE (X=0.29,Y=0.33) |
| 598-2005-102F | |

NOTES:
1. PIN NUMBERS ARE FOR REFERENCE ONLY, DESIGNATION NON-EXISTENT ON PART.
2. LABELING FOR REEL AND OUTSIDE OF ALUMINUM BAG, DIALIGHT P/N, QUANTITY PER REEL, DATE CODE, INTENSITY BIN CODE, LOT NUMBER AND COUNTRY OF ORIGIN.
3. THIS PRODUCT IS RoHS COMPLIANT. EACH BAG IS TO BE MARKED WITH RoHS COMPLIANT LABEL OR EQUIVALENT MARKINGS. LED MUST BE Pb FREE.
4. MOISTURE SENSITIVITY LEVEL 3.
5. QUANTITY : PART NUMBERS END WITH 107F REFER AS 4000 PCS/ REEL
PART NUMBERS END WITH 102F REFER AS 20 PCS/ STRIP

| REV | ECN NO | REVISIONS | DRN | CKD | APP | DATE |
|---|---|---|---|---|---|---|
| A | 106343 | NEW RELEASE | JSG | CS | NO | 02JUN23 |

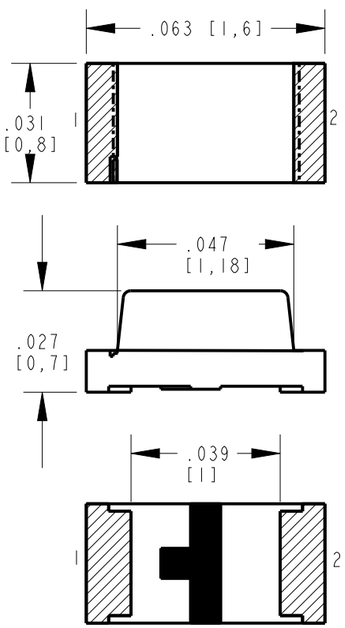


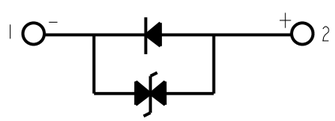


LED SCHEMATIC

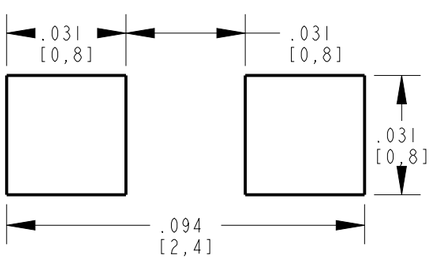


RECOMMENDED SOLDER PAD LAYOUT

## Carrier Tape Dimension

## TAPING SPECIFICATIONS

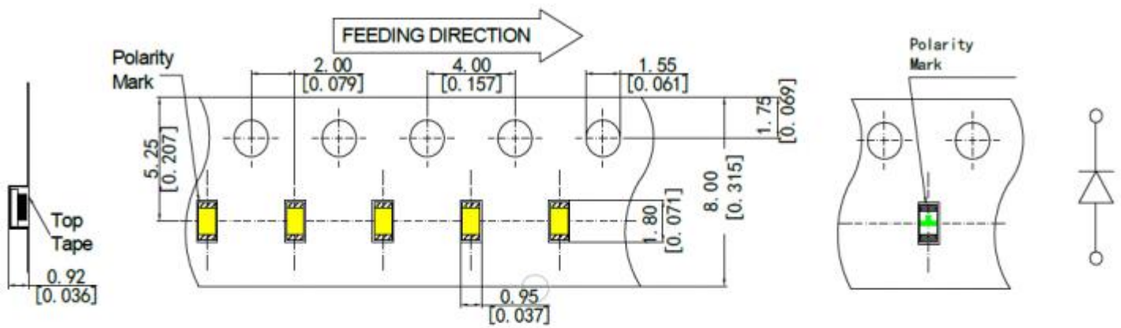


TOLERANCE (UNLESS OTHERWISE SPECIFIED): ±0.003(±0.1mm)

## Reel Dimension

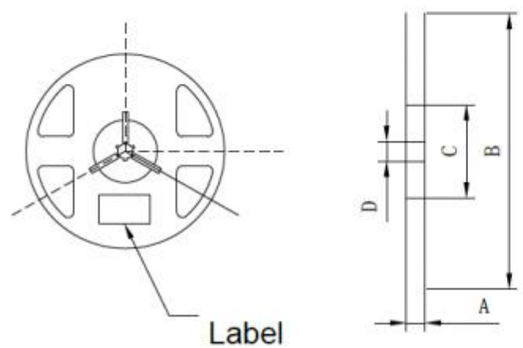


| | |
|---|---|
| A | 8.0±0.1mm |
| B | 178±1mm |
| C | 60±1mm |
| D | 13.0±0.5mm |

## RECOMMENDED RoHS SOLDER PROFILE

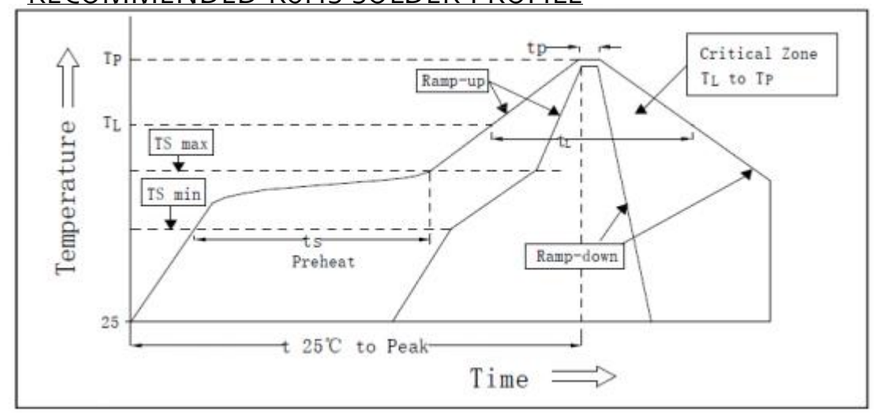


| MARK | DEFINITION | CONDITION |
|---|---|---|
| $TS_{max}$ | MAXIMUM OF PRE-HEATING TEMPERATURE | 200°C |
| $TS_{min}$ | MINIMUM OF PRE-HEATING TEMPERATURE | 150°C |
| $T_s$ | TIME FORM Tsmin To Tsmax | 60s-120s |
| $T_L$ | REFERENCE TEMPERATURE | 217°C |
| $t_L$ | RETENTION TIME FOR $T_L$ | 60s-150s |
| $T_P$ | PEAK TEMPERATURE | 260°C |
| $t_P$ | TIME FOR PEAK TEMPERATURE | WITHIN 10s |
| DTr/Dt | TEMPERATURE RISING RATE | WITHIN 3°C/sec |
| DTd/Dt | TEMPERATURE DECREASING RATE | WITHIN 6°C/sec |

ABSOLUTE MAXIMUM RATINGS AT 25°C

| LED COLOR (mcd) | POWER DISSIPATON (mW) | FORWARD CURRENT (mA) | PEAK FORWARD CURRENT (mA) 1/10 DUTY CYCLE, 0.1ms PULSE WIDTH | OPERATING TEMPRATURE (°C) | STORAGE TEMPRATURE (°C) | DERATING CURVE (mA/°C) | ELECTROSTATIC DISCHARGE (V) |
|---|---|---|---|---|---|---|---|
| WHITE(65-200) | 102 | 30 | 100 | -40°C TO +85°C | -40°C TO +85°C | .416 | 5000 |
| WHITE(500-1000) | 108 | 30 | 60 | -40°C TO +85°C | -40°C TO +85°C | .416 | 5000 |

OPERATING CHARACTERISTICS AT 25°C AMBIENT

| LED COLOR (mcd) | TEST CONDITION (mA) | LUMINOUS INTENSITY (mcd) | | FORWARD VOLTAGE (V) | | CHROMATICITY CORDINATED (CALCULATED) | REVERSE CURRENT (uA) | VIEWING ANGLE (DEGREES) | THERMAL RESISTANCE (°C/W) |
|---|---|---|---|---|---|---|---|---|---|
| | TYP | MIN | MAX | MIN | MAX | TYP | MAX | TYP | MAX |
| WHITE(65-200) | 5mA | 65 | 200 | 2.6 | 3.4 | X=.307,Y=.304 | 10μA @ VR=5V | 140 | 450 |
| WHITE(500-1000) | 20mA | 500 | 1000 | 2.8 | 3.6 | X=.299,Y=.330 | | 140 | 450 |

**ATTENTION:**
**OBSERVE PRECAUTIONS FOR HANDLING ELECTROSTATIC SENSITIVE DEVICES**


THIS DRAWING AND THE CONTENTS HEREIN ARE CONFIDENTIAL AND THE SOLE PROPERTY OF DIALIGHT CORP. REPRODUCTION OF THIS DRAWING OR CONSTRUCTION OF ANY PARTS WITHIN THIS DRAWING ARE FORBIDDEN WITHOUT THE WRITTEN CONSENT OF DIALIGHT CORP.


DIALIGHT CORP INTERNAL REFERENCE ONLY : 3D MODEL : 4500521864X23- .1

SCALE: 25.000
ALL DIM's: INCH (mm)
TOLERANCES: UNLESS OTHERWISE SPECIFIED
FRACTIONS: ±1/64
DECIMALS (.XX): ±.01
DECIMALS (.XXX): ±.005
DECIMALS (.XXXX): ±.0005
ANGLES: ±1°
FINISH: -
FSCM 83330

DRAWING NUMBER: C-18693
REV: A
TITLE: SM 0603 WHITE LED 0.7mm THICK
MATERIAL: -


Dialight
1501 ROUTE 34 SOUTH
FARMINGDALE, NJ 07727
(732) 919-3119
www.dialight.com


SHEET 1 OF 1
FAMILY TABLE:


Downloaded from Arrow.com.