THIS DRAWING IS UNPUBLISHED. RELEASED FOR PUBLICATION -,- .
© COPYRIGHT - BY TYCO ELECTRONICS CORPORATION. ALL RIGHTS RESERVED.

| LOC | DIST |
|---|---|
| AD | 00 |

REVISIONS

| P | LTR | DESCRIPTION | DATE | DWN | APVD |
|---|---|---|---|---|---|
| | O | REV PER EC 0S12-0091-05 | 24FEB05 | BC | GS |
| | A | ECR-10-019054 | 15SEP10 | DP | MQW |

## CONNECTOR ASSEMBLY EXAMPLARY LOADED 6

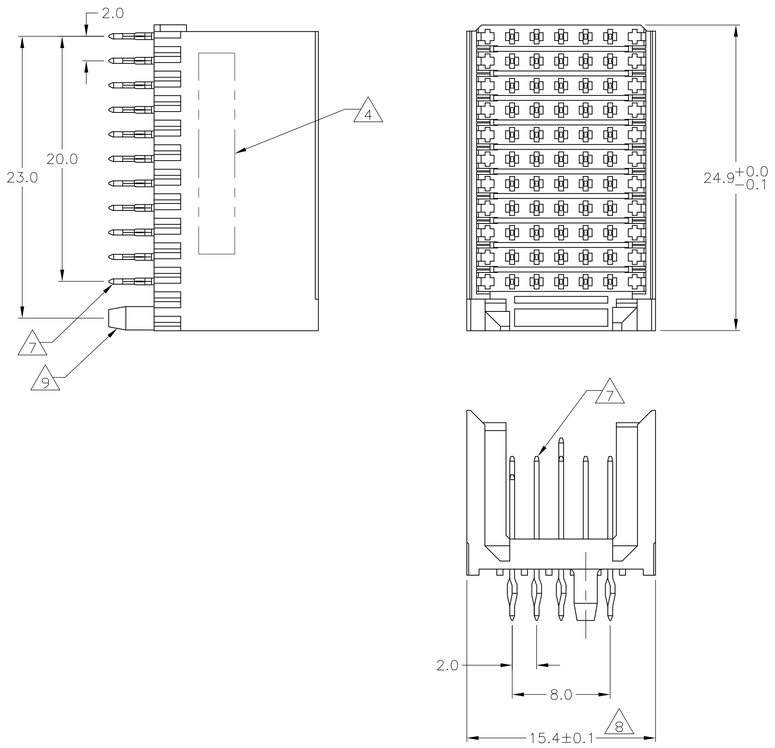


## CONTACT DIMENSIONS

SCALE 5:1

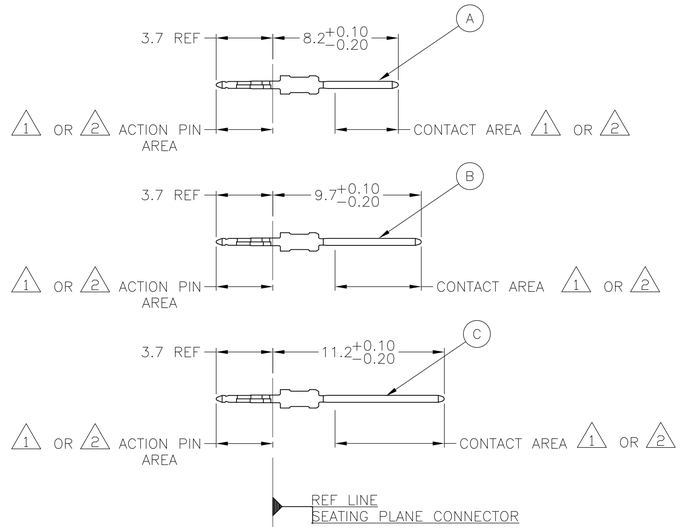


## CONTACT LAYOUT

| | z | a | b | c | d | e | f |
|---|---|---|---|---|---|---|---|
| 1 | | A | B | B | B | B | |
| 2 | | B | B | B | B | B | |
| 3 | | B | B | B | B | B | |
| 4 | | B | B | B | B | B | |
| 5 | | B | B | B | B | B | |
| 6 | | B | B | B | B | B | |
| 7 | | B | B | B | B | B | |
| 8 | | B | B | B | B | B | |
| 9 | | B | B | C | B | B | |
| 10 | | B | B | B | B | B | |
| 11 | | A | B | B | B | B | |

GUIDING

2 CONTACT FINISH:
CONTACT AREA: 0.8µm MIN GOLD PER ASTM B488 OVER 1.3µm MIN NICKEL PER SAE-AMS-QQ-N-290.
ACTION PIN: 0.5µm MIN TIN PER ASTM B545 OVER 1.3µm MIN NICKEL PER SAE-AMS-QQ-N-290.

3 MATERIAL:
CONTACT: PHOSPHOR BRONZE.
HOUSING: GLASS-FILLED POLYESTER.

4 CONNECTOR MARKED WITH PART NUMBER AND DATE CODE. ADDITIONAL CHARACTERS OR MARKINGS, AS WELL AS THE LOCATION OF THE MARKINGS, MAY BE ADDED FOR TRACEABILITY BASED UPON MANUFACTURERS DISCRETION.

5 PLATED-THROUGH HOLES AT 2x2mm SQUARE GRID PATTERN DEFINED BY CONTACT LAYOUT.

6 FOR ACTUAL PIN LOADING SEE "CONTACT LAYOUT".

7 FOR ACTUAL PIN DIMENSIONS SEE "CONTACT DIMENSIONS".

8 TO BE MEASURED AT BOTTOM OF SHROUD.

9 LOCATION PEG.

## **RECOMMENDED** PCB-HOLE LAYOUT COMPONENT SIDE SHOWN

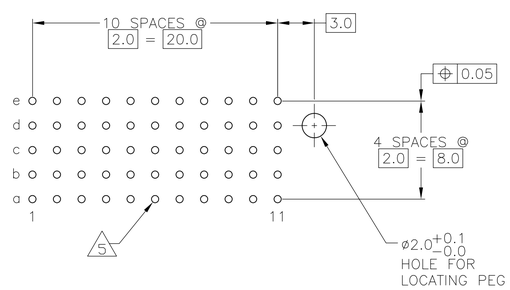


## PLATED THRU HOLES PARAMETERS

REFERENCE APPLICATION SPECIFICATION

| 2 | 6645262-1 |
|---|---|
| FINISH | PART NUMBER |

THIS DRAWING IS A CONTROLLED DOCUMENT.

DIMENSIONS: mm

TOLERANCES UNLESS OTHERWISE SPECIFIED:
0 PLC ± –
1 PLC ± 0.2
2 PLC ± 0.02 ±0.2
3 PLC ± 0.005
4 PLC ± –
ANGLES ± 0°30'

MATERIAL 3

FINISH SEE TABLE

DWN B.CARBO 24FEB05
CHK G.SKIPPER 24FEB05
APVD G.SKIPPER 24FEB05
PRODUCT SPEC 108-19082
APPLICATION SPEC 114-19029
WEIGHT –

Tyco Electronics
Tyco Electronics Corporation
Harrisburg, Pa 17105-3608

NAME MALE ASSEMBLY, Z-PACK 2mm HM, TYPE C

| SIZE | CAGE CODE | DRAWING NO | RESTRICTED TO |
|---|---|---|---|
| A1 | 00779 | C-6645262 | – |

CUSTOMER DRAWING | SCALE 4:1 | SHEET 1 OF 1 | REV A

AMP 4805 REV 31MAR2000

Downloaded from Arrow.com.

H:\dmmod\6645262-c.dwg