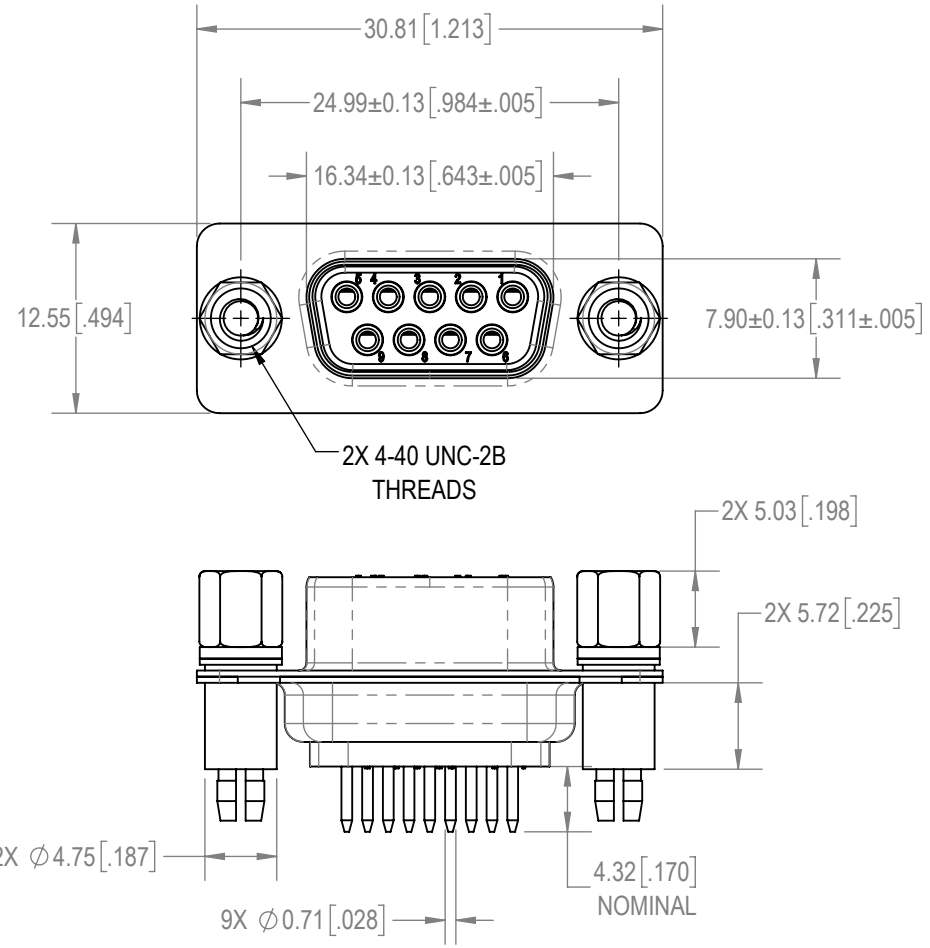

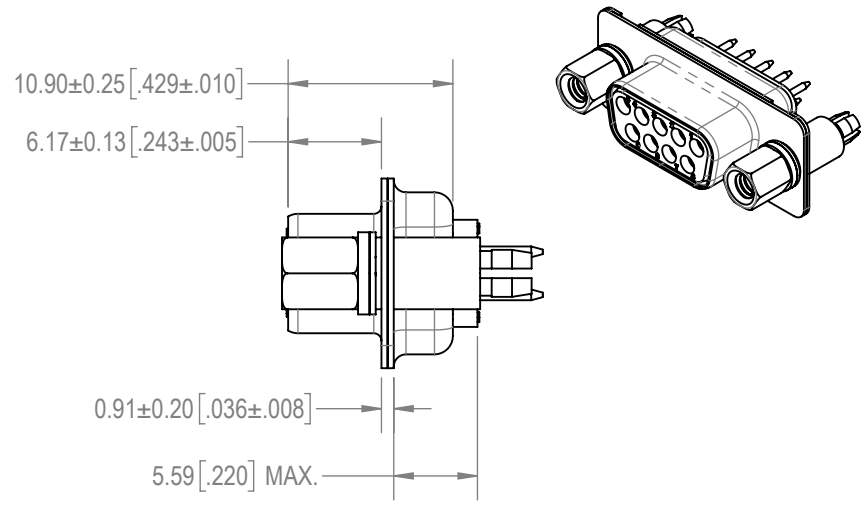

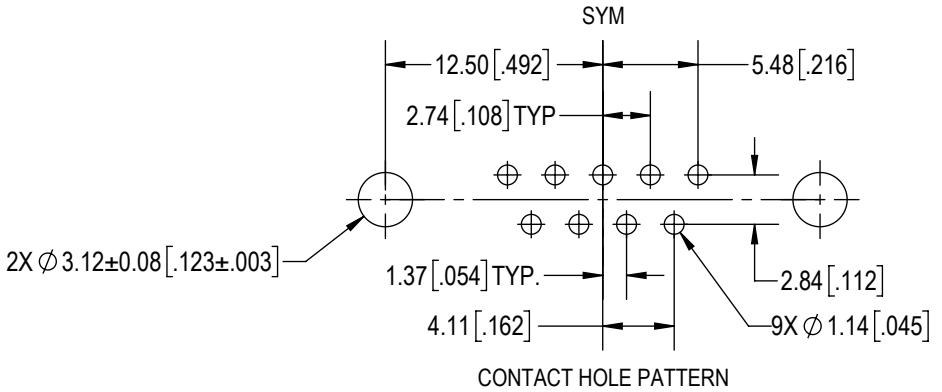

CONTACT HOLE PATTERN

NOTES:

1. MATERIALS AND FINISH:
   - INSULATOR: GLASS FILLED POLYESTER PER ASTM-D-5927, UL 94V-0, COLOR: BLUE.
   - CONTACTS: PRECISION MACHINED COPPER ALLOY, GOLD FLASH OVER NICKEL PLATE.
   - SHELLS: STEEL, ZINC PLATE WITH CHROMATE SEAL.
   - SWAGED SPACER WITH PUSH ON FASTENERS: PHOSPHOR BRONZE, TIN PLATE.
   - JACKSCREWS: STEEL, ZINC PLATE WITH CHROMATE SEAL.
   - WASHERS: BRASS, ZINC PLATE WITH CHROMATE SEAL.
2. DETAILED PRODUCT, MECHANICAL AND ELECTRICAL INFORMATION IS AVAILABLE IN THE LATEST STANDARD DENSITY D-SUB PRODUCT PUBLICATION AT CONNECTPOSITRONIC.COM
3. CONNECTORS ARE COMPLIANT TO THE CURRENT RoHS DIRECTIVE.

BY: SB	CHK: AP	3RD ANGLE	POSITRONIC BELIEVES THE DATA ON THE DRAWING TO BE RELIABLE. THE USER EMPLOYS SUCH INFORMATION AT HIS OWN DISCRETION AND RISK. POSITRONIC ASSUMES NO RESPONSIBILITY FOR RESULTS OBTAINED OR DAMAGES INCURRED FROM USE OF SUCH INFORMATION IN WHOLE OR IN PART.
APR: AB	RELEASED DATE: 2023-05-05	SCALE: NTS	
TOLERANCES: ±0.03mm [.001 INCHES]FOR MALE CONTACT MATING DIAMETERS; ±0.08mm [.003 INCHES]FOR CONTACT TERMINATION DIAMETERS; ±0.13mm [.005 INCHES]FOR ALL OTHER DIAMETERS; ±0.38mm [.015 INCHES]FOR ALL OTHER DIMENSIONS; ±5° FOR ALL ANGLES; DIMENSION ARE IN MILLIMETERS [INCHES]		PART NUMBER: HDC9S3S60T20/AA	SERIES: HDC
		TITLE: HDC9S3S60T20/AA	
		CREATED ON: 2023-05-05	SHEET: SHEET 1 OF 1 — REV: A

Positronic® CONNECTPOSITRONIC.COM

Downloaded from Arrow.com.