THIS DRAWING IS A CONTROLLED DOCUMENT.

REVISIONS				
REV	DESCRIPTION	DATE	DWN	APVD
AA	ECR 7558	21/02/2020	N.H	R.S
AB	ECR-24-216902 (CRN 26424)	07/08/2024	N.H	R.S

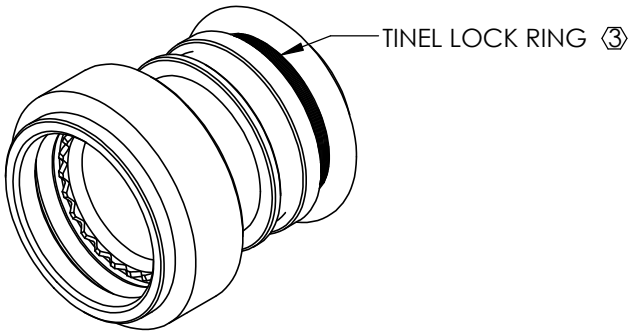

CODE 40 - TINEL-LOCK BACKSHELL

TXR40AB00-0608AI

SERIES
- TXR - SUPPLIED WITH RING (SEE RINGS OPTION)
- TX - RING NOT INCLUDED

CONNECTOR INTERFACE
MATERIAL
- REFER TO CH00-0250-008

FINISH
- REFER TO CH00-0250-008

ANGLE
DASH NUMBER (TABLE 1)
ENTRY SIZE (TABLE 2)
RING OPTION
- AI - TO SUIT SINGLE BRAID
- BI - TO SUIT DOUBLE BRAID
- FOR TX, LEAVE BLANK

MODIFICATION CODE
- REFER TO CH00-0250-008 2

NOTES:

1. THIS PRODUCT IS DESIGNED TO TERMINATE A BRAIDED CABLE SHIELD AND A HEAT SHRINKABLE LIPPED BOOT TO A CONNECTOR.

2 FOR ADDITIONAL DIMENSIONS, ORDERING INFORMATION AND MODIFICATIONS, SEE CH00-0250-008.

3 SEE DRAWING TR FOR DETAIL ON TINEL-LOCK RING, RINGS ARE DESIGNED TO BE HEATED ELECTRICALLY,ALL RINGS ARE MARKED WITH THERMOCHROMIC PAINT WHICH CHANGES COLOUR WHEN INSTALLATION TEMPERATURE IS REACHED.

4. BACKSHELL TO BE PERMANENTLY MARKED/BAGGED AND LABELLED WITH CODE IDENTIFICATION NUMBER AND PART NUMBER LESS RING DESIGNATOR. (e.g. 06090-TXR40AB00-1206). RING SHALL BEAR NO MARKING.

5 FOR LARGER ENTRY SIZES, A 2 PIECE BACKSHELL ASSEMBLY (TYPE 2) IS SUPPLIED.

6. BACKSHELL MATES TO MIL-DTL-38999 SERIES III & IV - CLASS C, F, K AND W, D38999/20, /24, /26, /40, /46 AND /47 CONNECTORS AND WHEN MATED SHALL PROVIDE A WATER-TIGHT SEAL MEETING THE REQUIREMENTS OF MIL-C-85049, PARA. 3. 5. 7.

RELEASED FOR PUBLICATION
ALL RIGHTS RESERVED.
© COPYRIGHT 20 BY
THIS DRAWING IS UNPUBLISHED.

DIMENSIONS: MILLIMETERS

TOLERANCES UNLESS OTHERWISE SPECIFIED:

GENERAL TOL
LINEAR ±0,25MM
ANGULAR ±1°

DWN: N.HAWKINS 21/02/2020
CHK: R.STYLES 27/02/2020
APVD: M.PAUL 27/02/2020

PRODUCT SPEC: MIL-DTL-38999 SERIES III & IV

APPLICATION SPEC: –

WEIGHT:

MATERIAL: SEE P/N BREAKDOWN

FINISH: SEE P/N BREAKDOWN

TE Connectivity

PART NUMBER: TXR40 SERIES

NAME: TINEL LOCK BACKSHELL

SIZE	CAGE CODE	DRAWING NO	RESTRICTED TO
A4	06090	C-P31616	

CUSTOMER DRAWING

SCALE 1.5:1 SHEET 1 OF 3 REV AB

Downloaded from Arrow.com.

THIS DRAWING IS A CONTROLLED DOCUMENT.

REVISIONS

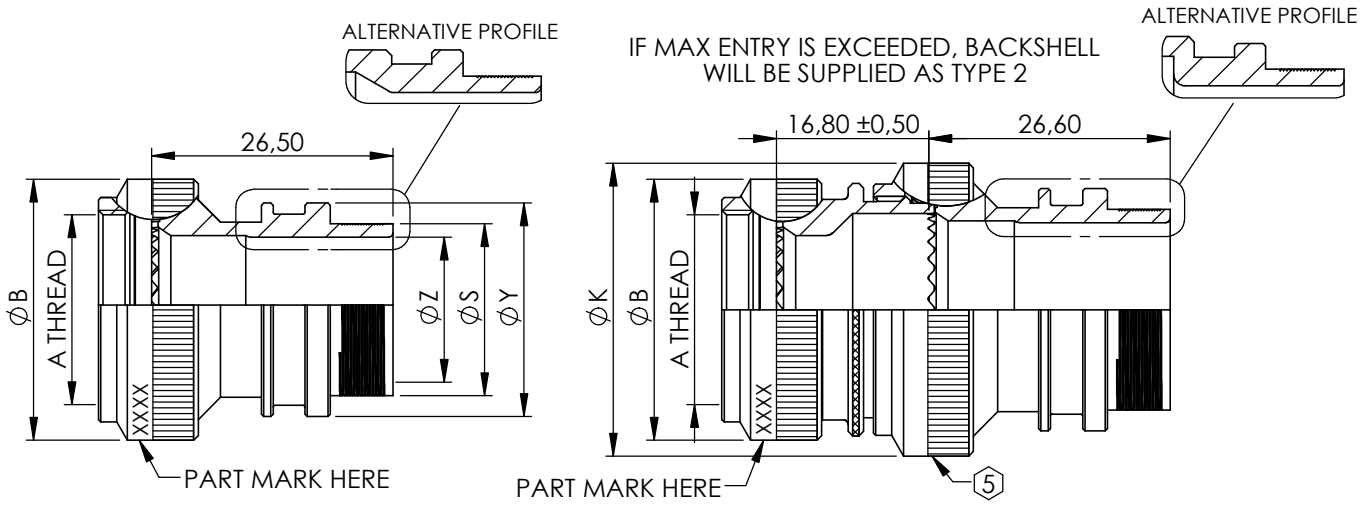

STRAIGHT BACKSHELL - TYPE 1

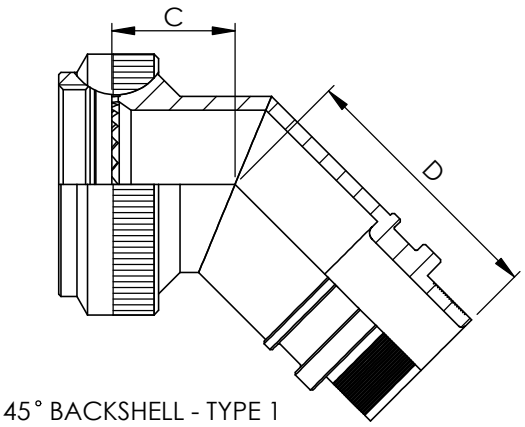

45° BACKSHELL - TYPE 1

STRAIGHT BACKSHELL - TYPE 2

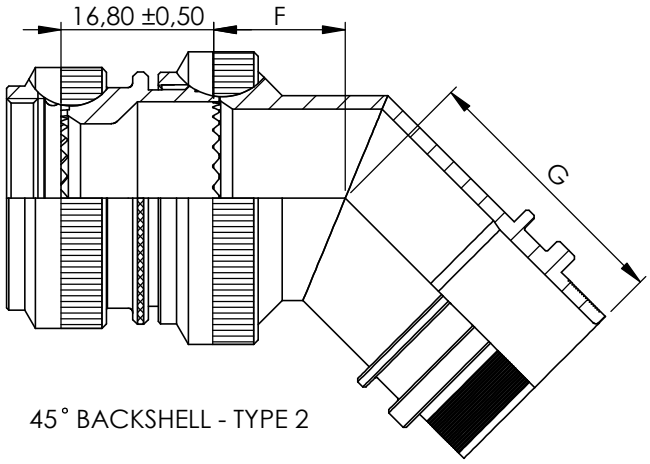

45° BACKSHELL - TYPE 2

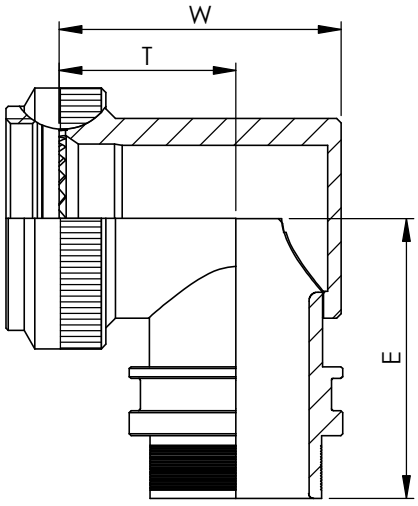

90° BACKSHELL - TYPE 1

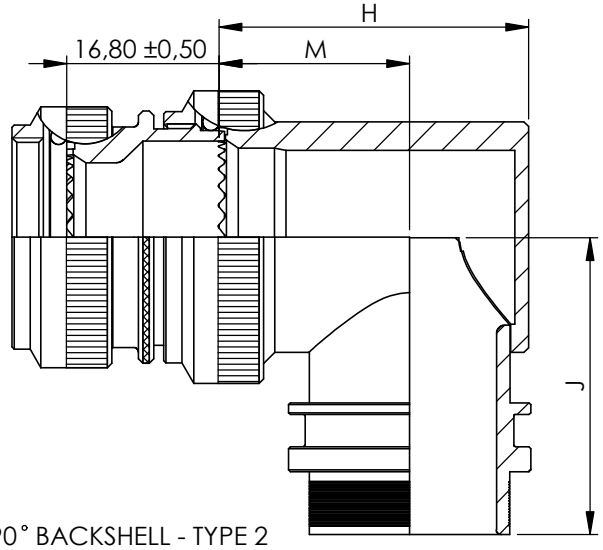

90° BACKSHELL - TYPE 2

THIS DRAWING IS UNPUBLISHED. © COPYRIGHT 20 BY ALL RIGHTS RESERVED. RELEASED FOR PUBLICATION

DIMENSIONS: MILLIMETERS	DWN: N.HAWKINS 21/02/2020	MATERIAL: SEE P/N BREAKDOWN	FINISH: SEE P/N BREAKDOWN
TOLERANCES UNLESS OTHERWISE SPECIFIED: GENERAL TOL LINEAR ±0,25MM ANGULAR ±1°	CHK: R.STYLES 27/02/2020	TE Connectivity	
	APVD: M.PAUL 27/02/2020	PART NUMBER: TXR40 SERIES	
	PRODUCT SPEC: MIL-DTL-38999 SERIES III & IV	NAME: TINEL LOCK BACKSHELL	
	APPLICATION SPEC: –	SIZE A4 / CAGE CODE 06090 / DRAWING NO C-P31616 / RESTRICTED TO	
	WEIGHT:	Customer Drawing	SCALE 1,2:1 / SHEET 2 OF 3 / REV AB

1469-35 (3/13)

Downloaded from Arrow.com.

THIS DRAWING IS A CONTROLLED DOCUMENT.

REVISIONS

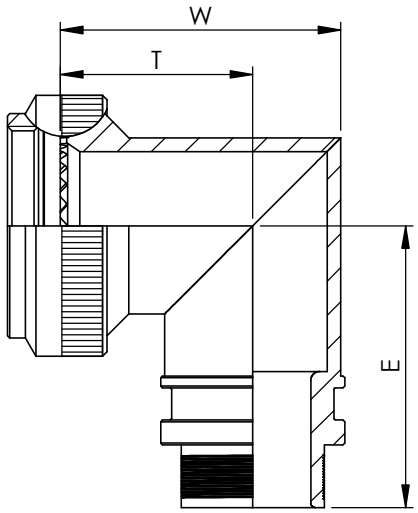

90° BACKSHELL - TYPE 1
STAINLESS STEEL AND
NICKEL ALUMINIUM BRONZE

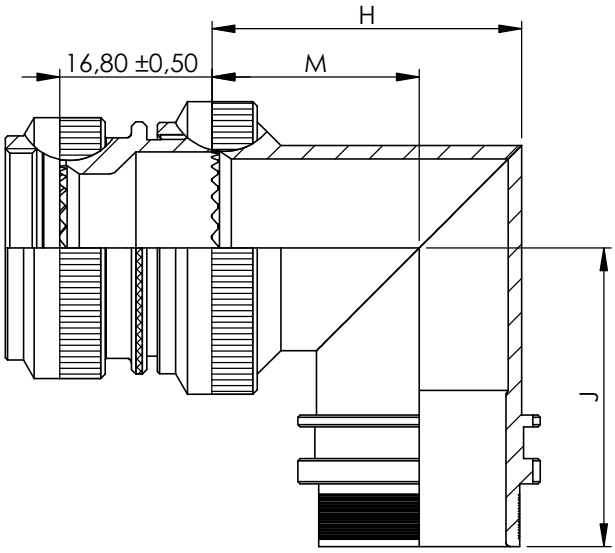

90° BACKSHELL - TYPE 2
STAINLESS STEEL AND
NICKEL ALUMINIUM BRONZE

TABLE 1

ORDER NO.	SHELL SIZE COM'L / MIL	A THREAD	ØB MAX	MAX ENTRY	C ±0,5	D ±0,5	W ±0,5	T ±0,5	E ±0,5	THESE DIMENSIONS APPLY IF BACKSHELL IS STAINLESS STEEL OR NICKEL ALUMINIUM BRONZE		
										W ±0,5	T ±0,5	E ±0,5
08	09 / A	M12 x 1,0	18,0	04	12,0	26,8	21,0	14,0	26,20	21,2	16,3	26,4
10	11 / B	M15 x 1,0	21,0	07	12,5	27,5	24,0	15,5	27,95	24,3	17,2	28,2
12	13 / C	M18 x 1,0	24,5	08	13,1	28,0	27,0	17,0	29,45	28,3	19,4	29,7
14	15 / D	M22 x 1,0	29,0	10	13,5	29,0	31,0	19,5	31,00	31,1	21,0	31,2
16	17 / E	M25 x 1,0	32,5	12	14,5	29,7	34,0	21,0	32,70	34,2	22,8	32,9
18	19 / F	M28 x 1,0	35,5	14	15,5	30,5	35,0	20,0	34,25	38,5	25,3	34,5
20	21 / G	M31 x 1,0	37,0	16	16,1	30,9	38,0	21,5	35,80	40,7	26,1	36,1
22	23 / H	M34 x 1,0	40,0	18	16,5	31,1	42,0	24,0	37,40	43,7	27,6	37,6
24	25 / J	M37 x 1,0	43,5	20	17,0	32,1	45,0	25,5	38,90	46,4	29,1	39,1

TABLE 2

ENTRY SIZE	ØZ MIN	ØS	ØY Ø0,3	ØK MAX	F ±0,5	G ±0,5	H ±0,5	M ±0,5	J ±0,5	THESE DIMENSIONS APPLY IF BACKSHELL IS STAINLESS STEEL OR NICKEL ALUMINIUM BRONZE		
										H ±0,5	M ±0,5	J ±0,5
04	6,35	9,49 +/-0,04	14,0	NA	NA	NA	NA	NA	NA	NA	NA	NA
05	7,92	11,06 +/-0,04	15,5	21,0	12,5	27,5	24,0	15,5	27,95	24,3	17,2	28,2
06	9,53	12,66 +/-0,04	17,1	21,0	12,5	27,5	24,0	15,5	27,95	24,3	17,2	28,2
07	11,10	14,21 +/-0,07	18,7	21,0	12,5	27,5	24,0	15,5	27,95	24,3	17,2	28,2
08	12,70	15,81 +/-0,07	20,3	24,5	13,1	28,0	27,0	17,0	29,45	28,3	19,4	29,7
10	15,88	18,96 +/-0,08	23,5	29,0	13,5	29,0	31,0	19,5	31,00	31,1	21,0	31,2
12	19,05	22,14 +/-0,08	26,7	32,5	14,5	29,7	34,0	21,0	32,70	34,2	22,8	32,9
14	22,23	25,30 +/-0,08	29,8	35,5	15,5	30,5	35,0	20,0	34,25	38,5	25,3	34,5
16	25,40	28,48 +/-0,08	33,0	37,0	16,1	30,9	38,0	21,5	35,80	40,7	26,1	36,1
18	28,58	31,65 +/-0,08	36,2	40,0	16,5	31,1	42,0	24,0	37,40	43,7	27,6	37,6
20	31,75	34,83 +/-0,08	39,4	43,5	17,0	32,1	45,0	25,5	38,90	46,4	29,1	39,1
22	34,93	37,98 +/-0,08	42,5	48,5	18,5	35,3	54,5	31,0	42,00	50,0	31,0	42,0
24	38,10	41,15 +/-0,08	45,7	52,1	21,9	38,1	58,0	33,0	46,00	53,5	33,0	46,0

RELEASED FOR PUBLICATION
ALL RIGHTS RESERVED.
© COPYRIGHT 20 BY
THIS DRAWING IS UNPUBLISHED.

DIMENSIONS: MILLIMETERS

TOLERANCES UNLESS OTHERWISE SPECIFIED:

GENERAL TOL
LINEAR ±0,25MM
ANGULAR ±1°

DWN: N.HAWKINS 21/02/2020
CHK: R.STYLES 27/02/2020
APVD: M.PAUL 27/02/2020

PRODUCT SPEC:
MIL-DTL-38999
SERIES III & IV

APPLICATION SPEC:
-

WEIGHT:

MATERIAL: SEE P/N BREAKDOWN

FINISH: SEE P/N BREAKDOWN

TE Connectivity

PART NUMBER: TXR40 SERIES

NAME: TINEL LOCK BACKSHELL

SIZE	CAGE CODE	DRAWING NO	RESTRICTED TO
A4	06090	C-P31616	

CUSTOMER DRAWING

SCALE 1,2:1 SHEET 3 OF 3 REV AB

1469-35 (3/13)

Downloaded from Arrow.com.