SERIES: VLD25-SMT | DESCRIPTION: LED DRIVER

FEATURES

- power LED driver
- wide input and output voltage range
- SMT package
- constant current output
- PWM dimming and analogue dimming
- short circuit protection
- analog dimming
- high efficiency up to 96%

RoHS

MODEL

MODEL	input voltage range (Vdc)	output voltage range (Vdc)	output current range (mA)	ripple and noise max (mVp-p)	dimming control	efficiency typ (%)
VLD25-300-SMT	5.5 ~ 48	3.3 ~ 36	0 ~ 300	120	PWM+analog	96
VLD25-350-SMT	5.5 ~ 48	3.3 ~ 36	0 ~ 350	120	PWM+analog	96
VLD25-500-SMT	5.5 ~ 48	3.3 ~ 36	0 ~ 500	120	PWM+analog	96
VLD25-600-SMT*	5.5 ~ 48	3.3 ~ 36	0 ~ 600	120	PWM+analog	96
VLD25-700-SMT	5.5 ~ 48	3.3 ~ 36	0 ~ 700	120	PWM+analog	96

Notes: 1. * Discontinued model

PART NUMBER KEY

VLD25 - XXX -SMT - X

- VLD25: Base Number
- XXX: Output Voltage
- SMT: Packaging Style
- X: Package Options
  "blank" = standard
  TR = Tape & Reel

DISCONTINUED

Please read our datasheet & drawing disclaimer here.
Downloaded from Arrow.com.

INPUT

parameter	conditions/description	min	typ	max	units
operating input voltage	absolute max before device failure operating input range	5 5.5	 24	55 48	Vdc Vdc
quiescent input current in off mode	Vin = 24 V, V_r < 0.6 V		400		µA
filter	capacitor		1		µF
remote on/off	dc-dc ON (Vr on pin 7) dc-dc OFF		open or 2.8 V < Vr < 6V Vr < 0.6 V		
remote pin current	Vr = 5V			1	mA
PWM frequency				0.2	kHz
input voltage - analog dimming	Vin = 5.5 ~ 48 V	0		15	V
control voltage - analog dimming	full on full off	0.15 4.3	0.20 4.5	0.25 4.7	V V
driving current - analog dimming	Vr = 5 V			0.6	mA

OUTPUT

parameter	conditions/description	min	typ	max	units
voltage range	Vin = 48 V , Vo = 3.3 V ~ 36 V	3.3		36	Vdc
voltage drop	Vin = 5.5 ~ 48 V, 1 ~ 10 LED	2		4	Vdc
current accuracy			±2	±3	%
output current range - analog dimming	Vin = 5.5 ~ 48 V, 1 ~ 10 LED	0		100	%
current stability	Vin = 48 V, Vo = 3.3 V ~ 36 V			±1	%
temperature coefficient	-40 ~ 71°C ambient			±0.015	%/°C
capacitive load				1,000	µF

PROTECTIONS

parameter	conditions/description	min	typ	max	units
short circuit protection	continuous automatic recovery				

SAFETY AND COMPLIANCE

parameter	conditions/description
EMI/EMC	EN 55015 power port, EN 55015, IEC/EN 61000-4-(2, 3, 4, 5, 6)
RoHS compliant	yes

ENVIRONMENTAL

parameter	conditions/description	min	typ	max	units
operating temperature	300/350 mA 500/600/700 mA	-40 -40		85 71	°C °C
storage temperature		-55		125	°C
maximum case temperature				100	°C

MECHANICAL

parameter	conditions/description	min	typ	max	units
dimensions	23.86 x 18.1 x 8.0 (0.94 x 0.71 x 0.31 inch)				mm
case material	epoxy resin (UL94-V0)				
weight			6		g

DISCONTINUED

Downloaded from Arrow.com.

MECHANICAL DRAWING

unit: mm(inch)
Pin tolerances: ±0.10mm(±0.039inch)
General tolerances: ±0.25mm(±0.010inch)

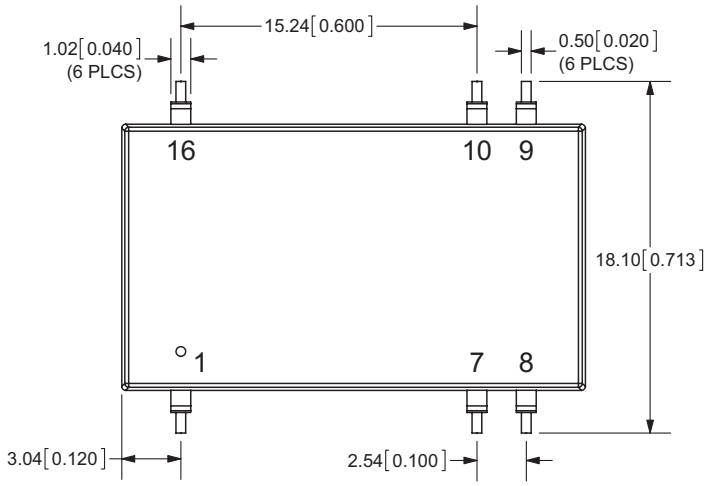

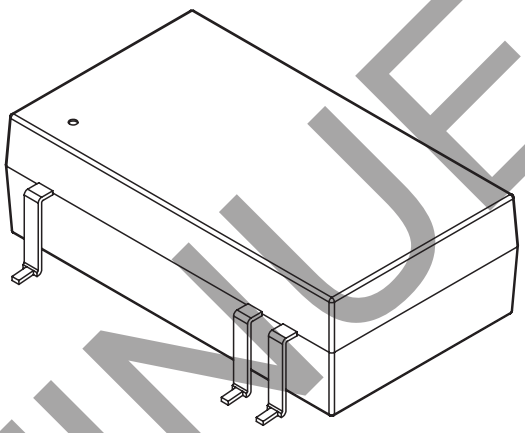

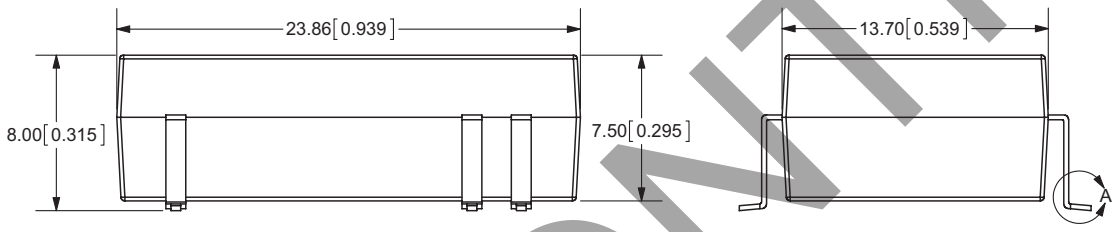

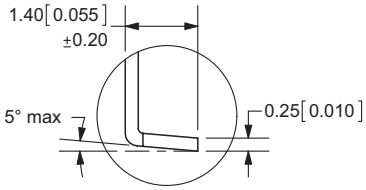

DETAIL A
SCALE 8 : 1

PIN CONNECTIONS	
Pin	Function
1	GND
7	ON/OFF/PWM
8	-Vout
9	+Vout
10	analog dimming
16	Vin

RECOMMENDED FOOTPRINT (TOP VIEW)

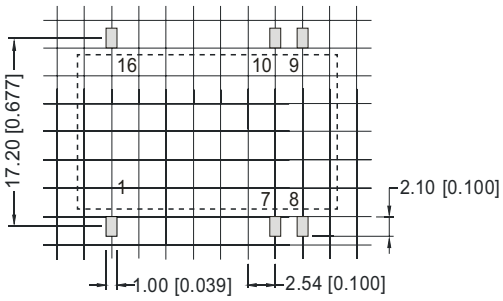

grid: 2.54 x 2.54 mm

DISCONTINUED

Downloaded from Arrow.com.

APPLICATION NOTES

1. **Digital Dimming Control**

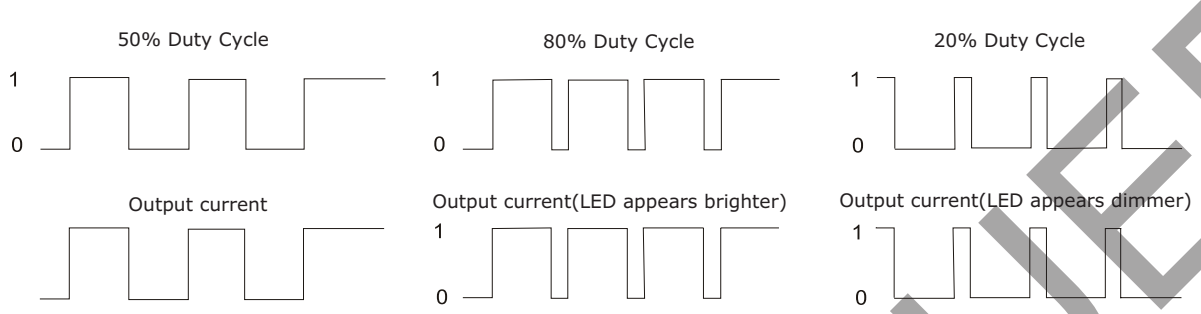

For the rated frequency PWM dimming, the output current of driver matters to the pulse width of the PWM signal, and the numerate please refer to the following formula:

$$I_{o,set} = \frac{(DT-0.6)}{T} I_{o,nom}$$

$I_{o,set}$ refers to the expected output current value.
$I_{o,norm}$ refers to the rated output current
D refers to the pulse width of the PWM signal
T refers to the cycle of the PWM signal

Note: The formula only supplies as a reference, and the output current may be a little deviation with different load. The Ton(min) of PWM signal must be greater than 0.7ms, or the driver can't be operated normally. It is natural for the driver to generate an audibly noise in dimming process, because the frequency of the control circuit is within human audibly range (20Hz~20kHz). In order to avoid the human eye can observe the LED flashes, the PWM dimming frequency is recommended to set above 100Hz.

2. **Analog Dimming Control and Application Example**

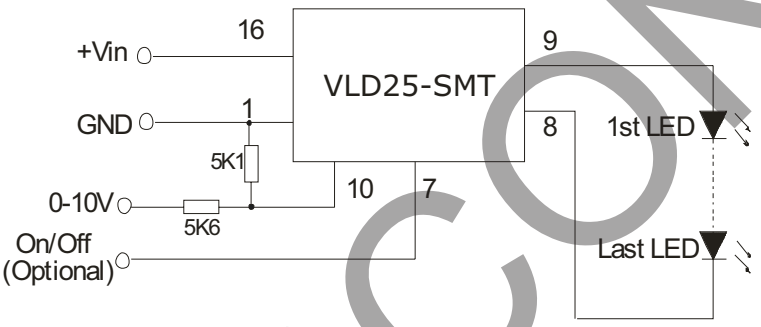

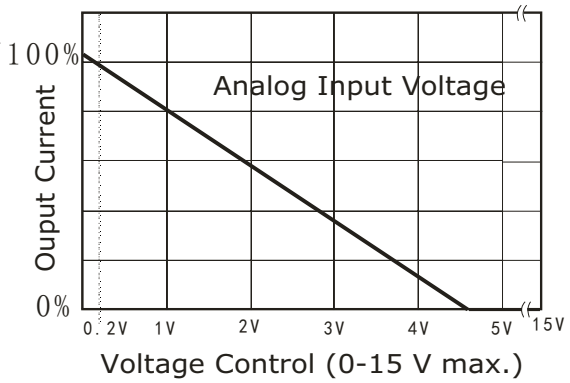

DISCONTINUED

Downloaded from Arrow.com.

3. EMC Recommended Circuit

EMI/RFI conducted EN55022 recommended circuit

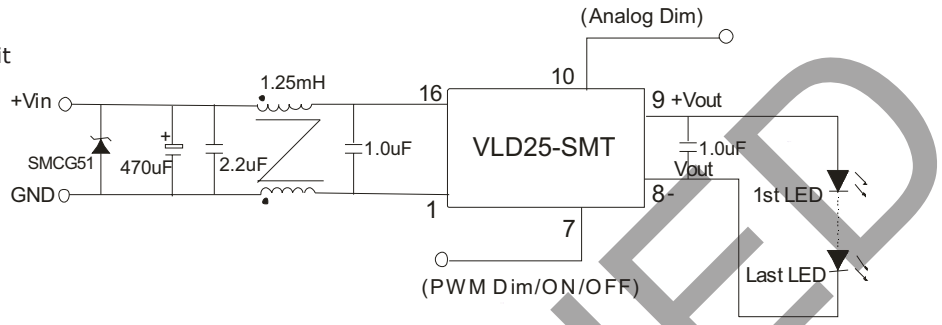

EMI/EMC recommended circuit

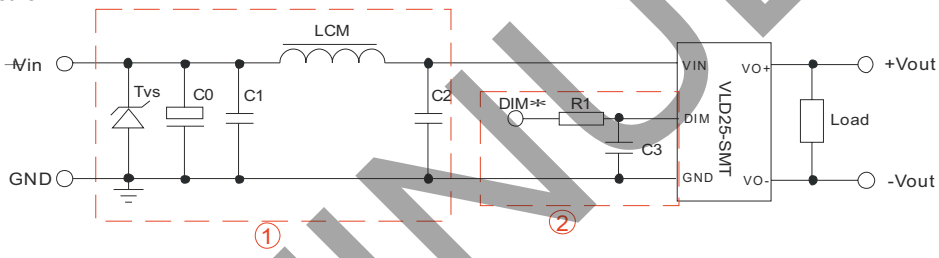

Notes: 1. DIM pin is the module's PWM dimming pin
2. While adding circuit, it may extend the PWM dimming output reaction time

EMI/EMC STANDARD				
ITEM	**STANDARD**	**LEVEL**	**PREDICATE**	**REMARK**
EMI conducted	EN 55015	power port	qualification	add external circuit 1
ESD	IEC 61000-4-2:2001	level 2	B	+4kV add external circuit 2
Surge	IEC 61000-4-5:2004	level 2	B	+1kV add external circuit 1
EFT	IEC 61000-4-4:2004	level 2	B	+1kV add external circuit 1

RECOMMENDED PARAMETERS	
COMPONENTS	**SPECIFICATIONS**
Tvs	SMCJ48A, 1500 W (Bringtking)
LCM	6.8 μh CD43 (CEAIYA)
C0	470 μF / 50 V (CapXon)
C1	4.7 μF / 50 V 1210 (TORCH)
C2	2.2 μF / 50 V 1210 (TORCH)
C3	470 PF / 100 V 0805 (TORCH)
R1	680 Ω 0805 (can be replaced by inductance or magnetic bead)

4. Recommended Reflow Soldering Profile

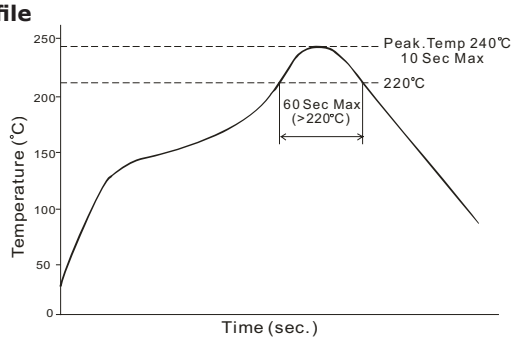

Note: All specifications measured at 25°C, humidity <75%, nominal input voltage, and full load unless otherwise noted.

DISCONTINUED

Downloaded from Arrow.com.

REVISION HISTORY

rev.	description	date
1.0	initial release	02/20/2012
1.01	V-Infinity branding removed	09/07/2012
1.02	added TR package option	11/01/2012
1.03	updated spec	04/02/2013
1.04	discontinued model VLD25-600-SMT	09/27/2023

The revision history provided is for informational purposes only and is believed to be accurate.

DISCONTINUED

CUI INC®

Headquarters
20050 SW 112th Ave.
Tualatin, OR 97062
800.275.4899

Fax 503.612.2383
cui.com
techsupport@cui.com

CUI offers a two (2) year limited warranty. Complete warranty information is listed on our website.

CUI reserves the right to make changes to the product at any time without notice. Information provided by CUI is believed to be accurate and reliable. However, no responsibility is assumed by CUI for its use, nor for any infringements of patents or other rights of third parties which may result from its use.

CUI products are not authorized or warranted for use as critical components in equipment that requires an extremely high level of reliability. A critical component is any component of a life support device or system whose failure to perform can be reasonably expected to cause the failure of the life support device or system, or to affect its safety or effectiveness.

Downloaded from Arrow.com.