ZMOD4510

Gas Sensor Module for Nitrogen Dioxide and Ozone

Description

The ZMOD4510 Gas Sensor Module detects air quality in a variety of indoor and outdoor applications. The module works reliably in various conditions, including very humid and dusty applications with the possibility of water spray, condensation, or immersion. The small LGA assembly consists of a gas sensing element and a CMOS signal conditioning IC. The sensing element is a Si-based microhotplate with a robust and highly sensitive metal oxide (MOx) chemiresistor. The signal conditioner controls the sensor temperature and measures the MOx resistance, which is a function of the gas concentration. The measurement results are easily read using an I^2C interface with the user's microprocessor, which processes the data.

The device is ideal for monitoring and reporting air quality based on nitrogen dioxide (NO_2) and ozone (O_3) concentrations which are typical outdoor air pollutants. Free firmware is provided with algorithms based on machine learning containing an embedded artificial intelligence (AI). The algorithms are used to determine concentration levels and are calculated based on the Air Quality Index (AQI) output according to international standards. The ZMOD4510 can selectively measure nitrogen dioxide and ozone. With its Ultra-Low Power mode, the ZMOD4510 is an excellent choice for low-voltage and low-power battery applications.

Typical Applications

- Air monitoring for nitrogen dioxide and ozone
- Detect unhealthy conditions in indoor and outdoor air
- Personal air quality monitors
- Smart City instrumentation
- Road/City emission control
- Automation based on AQI (HVAC systems, building air purification systems)
- Monitor home, office, public building, personal, and bathroom environments for healthy conditions and comfort
- Mobile, industrial, and consumer applications
- Boiler and heater control
- Weather station

Features

- Sensor output based on AI machine learning algorithm provides selective measurements of:
  - Nitrogen dioxide (NO_2), Ozone (O_3)
  - Ozone (O_3) using Ultra-Low Power (ULP)
- Supports international standards for air quality, such as the US Environmental Protection Agency (air quality index based on EPA)
- Heater driver and regulation loop for constant resistance, minimizing effect of environmental temperature on signal
- Built-in non-volatile memory (NVM) for module-specific data (configuration and calibration)
- Ultra-low average power consumption down to 0.22mW
- Excellent for low-voltage and low-power battery applications
- No external trimming components required
- External reset pin (active-LOW)
- Siloxane resistant
- JEDEC JESD47 qualified for 10 years lifetime
- Supply voltage: 1.7V to 3.6V
- RoHS compliant
- Operating temperature -40°C to 85°C
- Water and dustproof version available (IP67 certified)
- Package: 12-LGA. Available assembly sizes:
  - 3.0 × 3.0 × 0.7 mm (Standard version)
  - 3.0 × 3.0 × 0.9 mm (IP67 version)

Available Support

- Evaluation kits for USB and PMOD™ board
- Manuals, application notes, blog, and white papers
- Instructional videos
- Firmware with example codes, API, pre-compiled libraries, and algorithm support

Figure 1. ZMOD4510 Gas Sensor

© 2019-2025 Renesas Electronics

Downloaded from Arrow.com.

Contents

1. Overview 4
1.1 Block Diagram 4
1.2 Application Circuit 4
2. Pin Information 5
2.1 Pin Assignments 5
2.2 Pin Descriptions 5
3. Specifications 6
3.1 Absolute Maximum Ratings 6
3.2 Electrical Specifications 7
4. Description of Operation Modes and Related Outputs 8
4.1 AQI Rating according to EPA 9
4.2 Nitrogen Dioxide and Ozone 9
4.3 Sensor Module Algorithm and Firmware 10
5. Gas Sensor Module Characteristics 11
5.1 General Characteristics 11
5.2 Accuracy and Consistency 11
5.3 Conditioning and Sensor Self-Check Status 12
5.4 Environmental Influences 12
6. Assembly Restrictions, Operation, Integration Notes, and Storage 13
7. Test and Calibration 14
8. I^2C Interface and Data Transmission Protocol 15
9. Package Outline Drawings 16
10. Marking Diagrams 16
11. Ordering Information 17
12. Related Information 17
13. Glossary 18
14. Revision History 19

Downloaded from Arrow.com.

Figures

Figure 1. ZMOD4510 Gas Sensor 1
Figure 2. Block Diagram 4
Figure 3. Application Circuit 4
Figure 4. Pin Assignments – Top View 5
Figure 5. Nitrogen Dioxide and Ozone Course Compared to a Reference Instrument Based on Chemoluminescence 10
Figure 6. Typical Solder Profile 14
Figure 7. I^2C Data Transmission Protocol 15
Figure 8. Bus Timing 15

Tables

Table 1. Pin Descriptions 5
Table 2. Absolute Maximum Ratings 6
Table 3. Electrical Specifications 7
Table 4. Overview of Output and Properties for Different Operation Modes 8
Table 5. Sample Rates, Warm-Up Samples and Time for ZMOD4510 Operation Modes 8
Table 6. Air Quality Index Levels Described by the EPA [2] 9
Table 7. Gas Sensor Module Characteristics 11
Table 8. Typical ZMOD4510 Sensor Module Performances 12
Table 9. Final Test Parameters 14
Table 10. Bus Timing Characteristics 16
Table 11. Package Options 16

Downloaded from Arrow.com.

1. Overview

1.1 Block Diagram

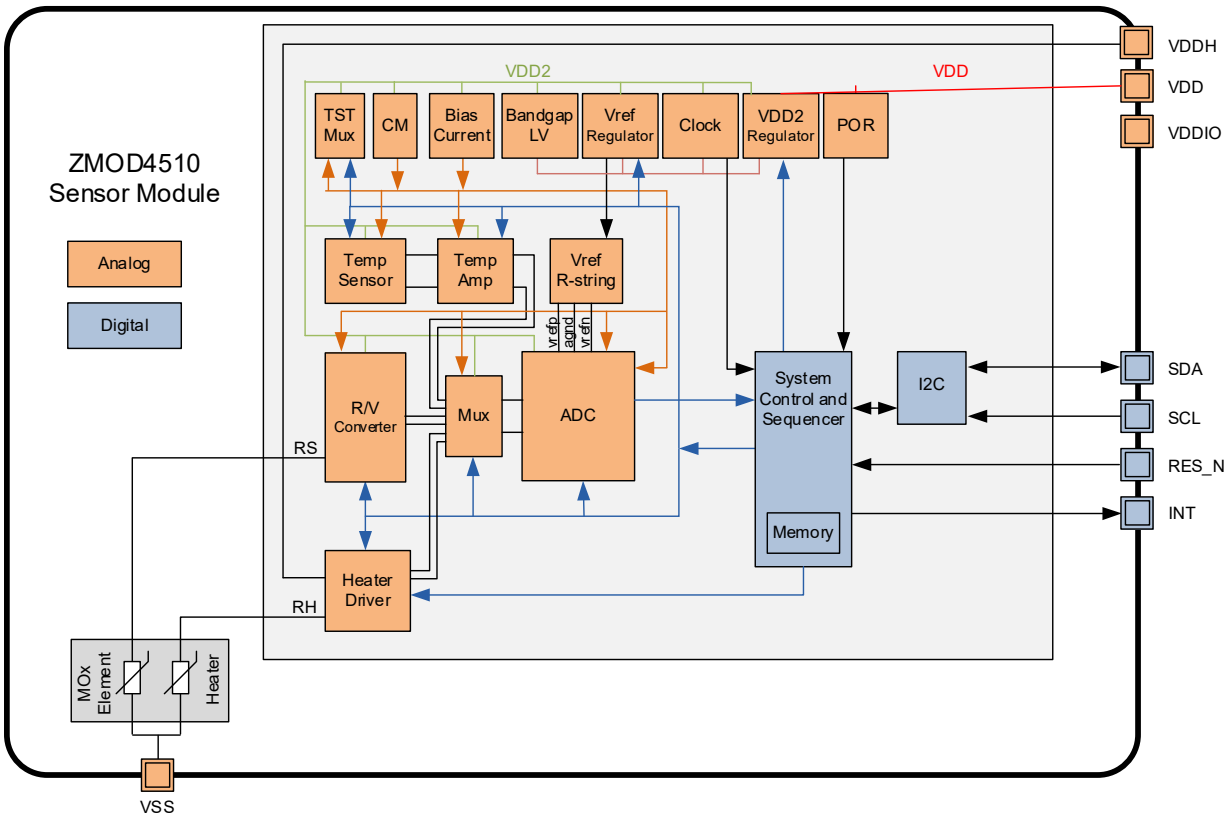

Figure 2. Block Diagram

Note: For definitions of abbreviations, see Glossary.

1.2 Application Circuit

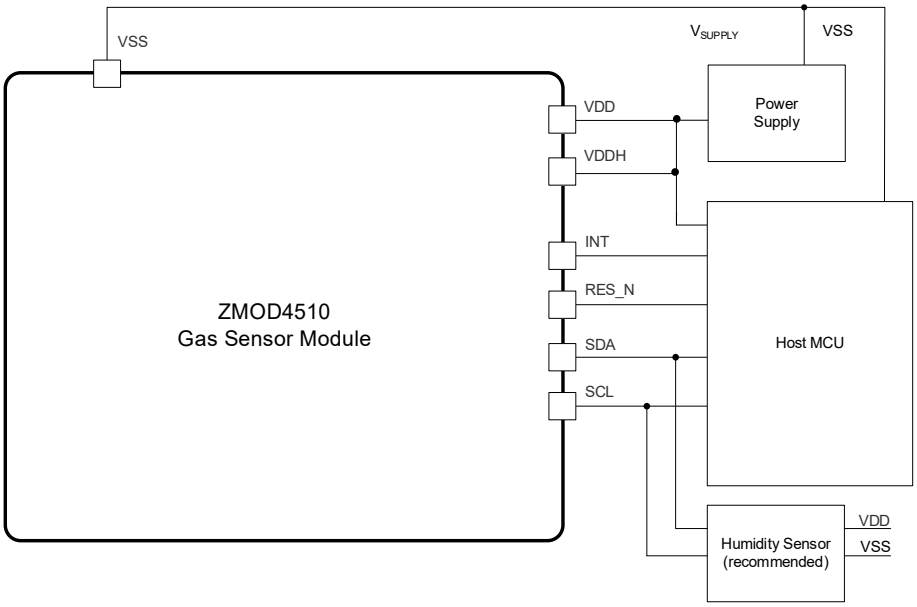

Figure 3. Application Circuit

Downloaded from Arrow.com.

2. Pin Information

2.1 Pin Assignments

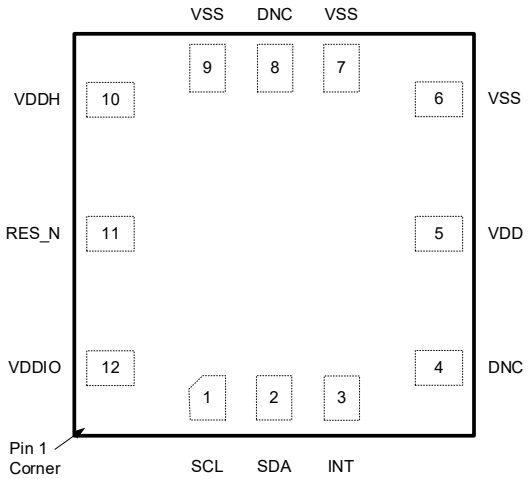

Figure 4. Pin Assignments – Top View

2.2 Pin Descriptions

Table 1. Pin Descriptions

Pin Number	Name	Type	Description
1	SCL	Input	Serial clock for the I^2C interface.
2	SDA	Input/Output	Serial data for the I^2C interface. Default 7-bit slave address: 33_{HEX}.
3	INT	Output	Interrupt signal (push-pull): ▪ HIGH when a measurement is running ▪ LOW when a measurement has finished *Note*: Use edge detection on falling edge.
4	DNC	-	Do not connect.
5	V_{DD}	Supply	Voltage supply for the ZMOD4510.
6	V_{SS}	Ground	Ground reference for the ZMOD4510.
7	V_{SS}	Ground	Ground reference for the ZMOD4510.
8	DNC	-	Do not connect.
9	V_{SS}	Ground	Ground reference for the ZMOD4510.
10	V_{DDH}	Supply	Voltage supply for the integrated heater in the ZMOD4510.
11	RES_N	Input	ZMOD4510 reset; active low.
12	V_{DDIO}	Supply	Voltage supply for I/O-interface in ZMOD4510.

Downloaded from Arrow.com.

3. Specifications

3.1 Absolute Maximum Ratings

The absolute maximum ratings are stress ratings only. The ZMOD4510 may not be operable below and above the recommended operating conditions in Table 2. Stresses exceeding the absolute maximum ratings will change the sensor module accuracy; lead to imprecision and eventually cause irreversible damage to the device. In addition, extended exposure to stresses above the recommended operating conditions may affect device reliability. Renesas does not recommend designing to the “Absolute Maximum Ratings.”

Note: The reference for all voltages is V_{SS}.

Table 2. Absolute Maximum Ratings

Symbol	Parameter	Minimum	Maximum	Unit
V_{DD}, V_{DDH}, V_{DDIO}	Maximum Analog and I/O Supply Voltage	-0.4	3.63	V
V_{A_IO}, V_{D_IO}	Maximum Voltage at all Analog and Digital I/O Pins	-0.5	V_{DDIO} + 0.5	V
-	Maximum Difference in Voltage between V_{DD} and V_{DDH} Pins	-	0.4	V
I_{IN}	Input Current into any Pin Except Supply Pins (Latch-Up Immunity)	-100	100	mA
V_{HBM1}	Electrostatic Discharge Tolerance – Human Body Model (HBM)	-	2000	V
V_{CDM}	Electrostatic Discharge Tolerance – Charged Device Model (CDM) on Packaged Module	-	1500	V
$T_{AMB-MAX}$	Maximum Ambient Temperature Range for Sensor Module Operation	-40	125	°C
T_{STOR}	Storage Temperature	-50	125	°C
$T_{OPERATION}$	Operation Temperature Sequence of Sensing Element [1]	-	550	°C

1. Controlled via API in firmware and EVK software.

Downloaded from Arrow.com.

3.2 Electrical Specifications

The following values are valid at operating conditions unless noted otherwise.

Note: The reference for all voltages is V_{SS}.

Table 3. Electrical Specifications

Symbol	Parameter	Conditions	Minimum	Typical	Maximum	Unit
V_{DD}	Recommended Supply Voltage	-	1.7	-	3.6	V
P_{AVG}	Average Power	NO2 O3 operation [1], V_{DD} = 1.8 V	-	3.90	-	mW
		ULP O3 operation [1], V_{DD} = 1.8 V		0.22		mW
I_{PEAK}	Peak Supply Current, including Heater Current	V_{DD} = 1.8 V	-	18	-	mA
		V_{DD} = 3.3 V	-	23	-	mA
I_{AVG}	Average Supply Current	NO2 O3 operation [1], V_{DD} = 1.8 V	-	2.17	-	mA
		NO2 O3 operation [1], V_{DD} = 3.3 V	-	2.18	-	mA
I_{AVG}	Average Supply Current	ULP O3 operation [1], V_{DD} = 1.8 V	-	120	-	µA
		ULP O3 operation [1], V_{DD} = 3.3 V	-	98	-	µA
I_{SLEEP}	Current during measurement delays	Sleep Mode ASIC	-	450	-	nA
PSRR	Power Supply Rejection Ratio	$V_{DD} \geq 2.0$ V	-	30	-	dB
-	Timing Accuracy (Valid for Measurements Only); (Sleep Timer is ±20%)	At room temperature; for timings derived from the internal clock	-2	-	2	%
		Over-temperature range; for timings derived from the internal clock	-0.1	-	0.1	%/K
r_{ADC}	ADC Resolution	-	10	-	16	Bit
t_{STA1}	Start-up Time: V_{DD} Ramp up to Interface Communication	-	-	-	1	ms
$f_{C,I2C}$	I^2C Clock Frequency	-	-	-	400	kHz
t_{VPP}	NVM Programming Time	-	-	6	16	ms
t_{RET_FTP}	Data Retention	85°C junction temperature	10	-	-	years
-	NVM Programming Cycles	-	1000	-	-	cycles
-	Default I^2C Communication Address	7-bit slave address	-	33_{HEX}	-	-
-	Blocking Capacitor for Power Supply	Ceramic type; recommended to be placed close to V_{DDH} of the gas sensor module	100	-	-	nF
VIH	Logic Voltage Level High	Applies for RES_N, SCL, and SDA	0.7* V_{DDIO}	-	-	V
VIL	Logic Voltage Level Low	Applies for RES_N, SCL, and SDA	-	-	0.3* V_{DDIO}	V

1. Operation modes are described in Description of Operation Modes and Related Outputs.

Downloaded from Arrow.com.

4. Description of Operation Modes and Related Outputs

The ZMOD architecture leverages different “Methods of Operation” (Operation Modes), which use time, temperature, and signatures from gases that enable unique signals from a highly trained machine learning system and makes use of embedded artificial intelligence (AI) technology. This section discusses the different operation modes of the ZMOD4510 as well as their corresponding outputs and properties. An overview is provided in Table 4.

The following operation modes and corresponding firmware packages are released [1]:

- NO2 O3 – Selective nitrogen dioxide and ozone firmware (recommended for new designs)
- ULP O3 – Selective ozone firmware for Ultra-Low Power operation

Note: On one physical device only one operation mode should run continuously. Switching of modes should not be done during device operation.

Table 4. Overview of Output and Properties for Different Operation Modes

	Output			Properties	
Operation Mode	**AQI rating**	**O_3 [ppb]**	**NO_2 [ppb]**	**Raw Resistance Signal [Ohm]**	**Ultra-low Power**
NO2 O3	✓	✓	✓	✓	-
ULP O3	✓	✓	-	✓	✓

By default, the NO2 O3 operation should be used for new designs due to best accuracy over wide NO_2 and O_3 detection range. Table 5 provides an overview of sample rate and the warm-up (stabilization) samples after each power-on for each operation mode. The warm-up times are fixed, and algorithm results should be considered only after the warm-up.

Table 5. Sample Rates, Warm-Up Samples and Time for ZMOD4510 Operation Modes

Operation Mode	Sample Rate [Seconds]	Warm-Up Samples Upon Start	Warm-Up Time [Minutes]
NO2 O3	6	50	5
ULP O3	2	900	30

The following sections provide information on nitrogen dioxide and ozone gases, gas concentrations, and thresholds given by the US Environmental Protection Agency (EPA). All graphs and information show the typical responses that are to be expected from the sensor module upon exposure to a variety of test conditions.

1. The previous OAQ 1st Generation operation mode is legacy and not recommended for new designs. OAQ 2nd Generation operation mode is renamed to ULP O3.

Downloaded from Arrow.com.

4.1 AQI Rating according to EPA

There are many sources of poor air that can elevate the Air Quality Index (AQI). Renesas has adopted the definition of Air Quality and its impact on user health and comfort proposed by the US Environmental Protection Agency (EPA); see Table 6. The ZMOD4510 can detect the presence of elevated nitrogen dioxide (NO_2) and ozone (O_3) levels as described by the EPA. Additional information on this topic, chemical background information, and measurement technologies are available in the Renesas white paper, *Overview Outdoor Air Quality*.

Table 6. Air Quality Index Levels Described by the EPA [2]

Air Quality Index (AQI)	Level of Concern and Air Quality Condition	O_3 Concentration 1h Avg. [ppb]	O_3 Concentration 8h Avg. [ppb]	NO_2 Concentration 1h Avg. [ppb]	Color Code
0 to 50	Good	0 to 62	0 to 54	0 to 53	Green
51 to 100	Moderate	63 to 124	55 to 70	54 to 100	Yellow
101 to 150	Unhealthy for Sensitive Groups	125 to 164	71 to 85	101 to 360	Orange
151 to 200	Unhealthy	165 to 204	86 to 105	361 to 649	Red
201 to 300	Very unhealthy	205 to 404	106 to 200	650 to 1249	Purple
301 to 500	Hazardous	405 to 604	-	1250 to 2049	Maroon

The AQI output is according to the EPA standard and is differentiated between 1 hour and 8 hours exposures (concentration dependent). Output based on these EPA criteria is called “EPA AQI” in the output files. However, for fast changing environments (for example, during evaluation, testing, and system checks), it is recommended to use the “FAST AQI” signal, which is the same AQI calculation based on a 1-minute average. The algorithm is tailored for best accuracy in the typical environmental range of 20 to 100ppb and can report up to 500ppb. AQI values above 500 are considered beyond the AQI. ULP O3 operation mode will report AQI levels calculated from ozone concentrations and will not consider nitrogen dioxide in the calculation.

4.2 Nitrogen Dioxide and Ozone

The ZMOD4510 operates with an optimized temperature profile to detect signatures from gases. These unique signals are supplied to a highly trained machine learning system that uses of embedded artificial intelligence (AI) technology. These algorithms can differentiate and report nitrogen dioxide (NO2 O3 mode) and ozone concentrations (NO2 O3 mode and ULP O3 mode). They are tailored to real-world applications with the appropriate concentrations. Figure 5 shows a typical course of nitrogen dioxide and ozone concentrations determined with the ZMOD4510 in a real-world environment with selective reference instrumentation.

Downloaded from Arrow.com.

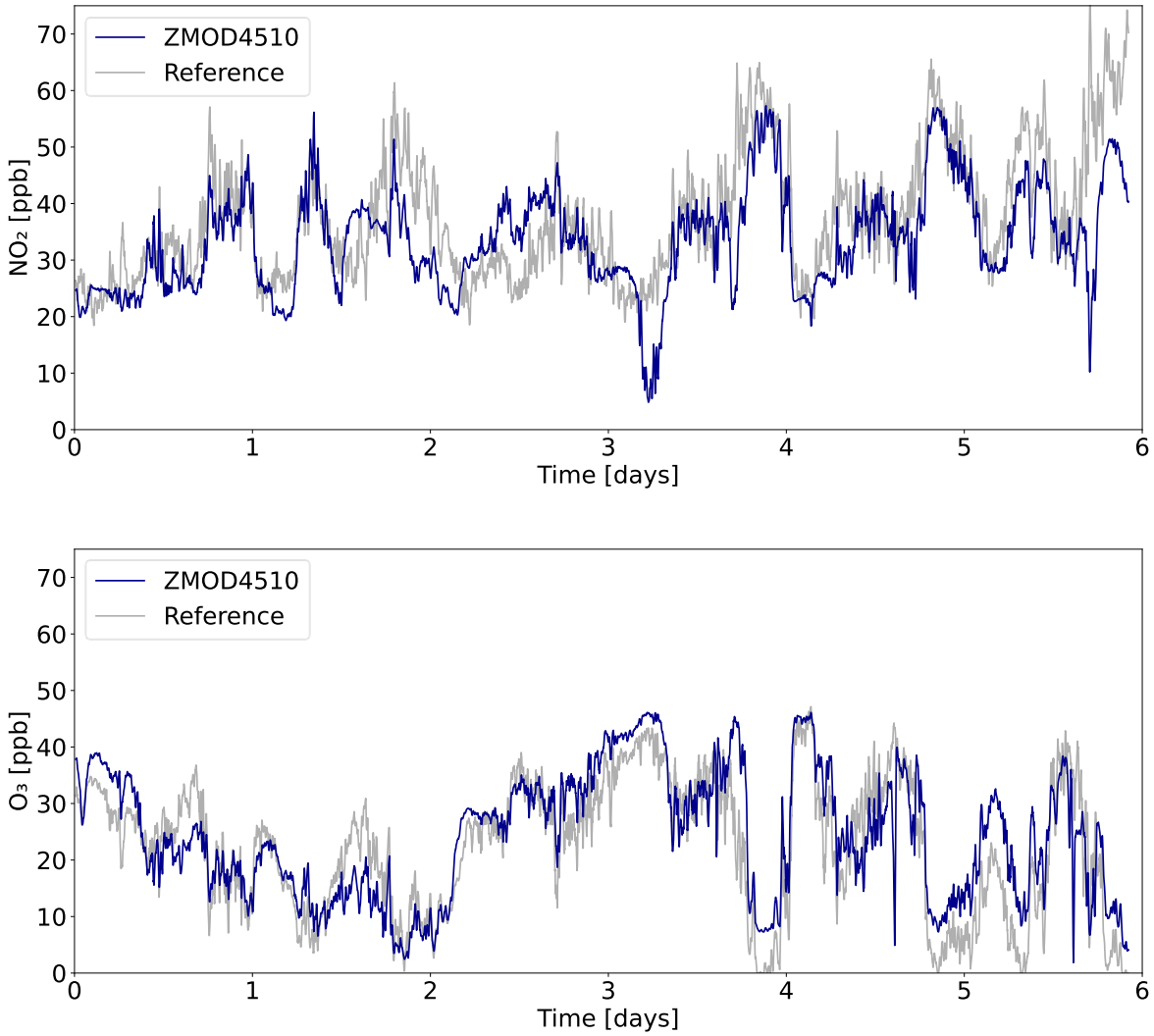

Figure 5. Nitrogen Dioxide and Ozone Course Compared to a Reference Instrument Based on Chemoluminescence

4.3 Sensor Module Algorithm and Firmware

To operate the ZMOD4510, the software and libraries provided by Renesas should be used. The user's microcontroller must ensure the appropriate sample rate of 2 (ULP O3) or 6 (NO2 O3) seconds. The algorithm always uses the raw output signals from the ZMOD4510, which are resistances, to determine the level of gases present. Depending on the microprocessor and compiler used, the firmware and its algorithms require 10 to 30kB flash size. All algorithms feature an automated baseline correction function, ensuring that the module can learn from its environment and distinguish elevated levels of gases under all conditions.

For implementing the sensor module in a customer-specific application, detailed information on the programming is available. More information and guidance on the firmware integration, architecture, and supported platforms are available in the ZMOD4510 Programming Manual – Read Me. Code examples in C and additional firmware descriptions for API, HAL, libraries, etc., are included in the downloadable firmware package from the ZMOD4510 product page.

Note: Switching from OAQ 1st Gen operation (legacy firmware) mode to the current firmware is not possible on the same sensor module. A new sensor must be used in this case.

Downloaded from Arrow.com.

5. Gas Sensor Module Characteristics

This section describes general sensor module characteristics, like measurement and operational ranges. In addition, details for accuracy, sensitivity, reliability, sample rates, and sensor module influences are explained. All graphs and information show the typical responses that are to be expected from the sensor module upon exposure to a variety of test conditions. For more information, including application notes, white papers, blog, and manuals, visit the ZMOD4510 product page.

5.1 General Characteristics

The ZMOD4510 uses a sequence of applied temperatures to sample the air and report nitrogen dioxide concentration, ozone concentration, and a resulting Air Quality Index (AQI) based on the EPA standard [2]. An additional temperature and humidity measurement is recommended, and the algorithm has an auto-compensation included. If no temperature and humidity data are provided as input, the algorithm will use default values, which may lead to an offset of ±1 EPA level according to Table 6. The sensor does not require an active or direct airflow onto the sensor module because diffusion of ambient gas does not limit the sensor response time. Characteristic module parameters are shown in Table 7.

Important: The ZMOD4510 can also detect safety-relevant gases; however, the sensor module is not designed to detect these interferants reliably and therefore it is not approved for use in any safety-critical or life-protecting applications. It must not be used in such applications, and Renesas disclaims all liability for any such use.

Table 7. Gas Sensor Module Characteristics

Symbol	Parameter	Conditions	Minimum	Typical	Maximum	Unit [1]
AQI	Air Quality Index	Rating according to EPA for nitrogen dioxide and ozone	0	-	500	-
-	Measurement Range	Nitrogen dioxide (NO2 O3 operation)	20	-	500	ppb
		Ozone	20	-	500	ppb
-	Cross sensitivity	NO2 O3 operation, 200ppb ozone	-	15	-	AQI level
		NO2 O3 operation, 200ppb nitrogen dioxide	-	10	-	AQI level
		ULP O3 operation, Ozone reporting at 200ppb nitrogen dioxide	-	25	-	AQI level
RH	Humidity Range	Indoor, Non-condensing	30	-	60	% RH
		Outdoor, Non-condensing	10	-	90	% RH
T	Temperature Range	Qualified, without hardware damage	-40		85	°C
		Algorithm operation	-20	-	65	°C

1. The abbreviation ppb stands for “parts per billion” and is a molar ratio with the exponent of 10^{-9}.

5.2 Accuracy and Consistency

All Renesas gas sensor modules come with electrical and chemical factory calibration with data stored in the module’s nonvolatile memory (NVM). Using the software provided by Renesas and the calibration coefficients in the NVM will result in stable measurements of the nitrogen dioxide, ozone concentrations, and AQI levels discussed in section 4.1. Typical achievable sensor module performance is displayed in Table 8.

[2] AirNow, US Environmental Protection Agency, Air Quality Index (AQI) Basics; available at: https://www.airnow.gov/aqi/aqi-basics/

Downloaded from Arrow.com.

Table 8. Typical ZMOD4510 Sensor Module Performances

Parameter	Conditions	Gas	Typical	Unit
Accuracy	uncalibrated, 0 to 500 ppb	Nitrogen dioxide (only NO2 O3 operation) and Ozone (all modes)	±50	AQI
Consistency [1]			±50	
Accuracy	NO2 O3 operation, calibrated, 23°C and 30% RH, 0 to 100 ppb	Nitrogen dioxide	±20	ppb
		Ozone	±10	
Consistency [1]		Nitrogen dioxide	±10	
		Ozone	±5	

1. Part-to-Part variation.

5.3 Conditioning and Sensor Self-Check Status

The cleaning conditions the sensor material and helps to remove contaminants (for example, solder flux and vapors). The cleaning process takes 1 minute. Cleaning can only be performed once during the lifetime of the sensor and is recommended after PCB assembly (for example, during final production test or at the end customer). The cleaning function automatically ensures that cleaning is performed only once. This is done by writing a control bit into the sensor module's NVM. It is important not to interrupt the cleaning process while it is running.

The ZMOD4510 will respond to ozone and nitrogen dioxide immediately upon start-up; however, a conditioning period of at least 48 hours of continuous operation in an ambient environment is recommended to improve stability and obtain maximum performance.

The sensor module has a self-check for its general functionality. With every measurement the algorithm performs an internal check of resistances to identify potential damage (in other words, a damage error). and the ZMOD4510 measurement output contains a sensor self-check status with either warm-up, valid, or damage. If a damage error lasts longer than 60 minutes then the following are possible reasons:

- Improper or open solder contacts
- High contamination on sensor material surface
- Broken MEMS membrane
- MOx material delamination
- Oxygen depletion on sensor surface
- Sometimes a stimulation with extremely high gas concentrations can cause a damage error output

The following measures can solve this issue:

- Check your production to ensure proper soldering. Use a proper soldering paste with correct temperature profile (see “Assembly Restrictions, Operation, Integration Notes, and Storage”).
- Find the source of sensor surface contamination during production (for example, solder vapors, cleaning chemicals) and try to avoid them. Make sure to have executed the cleaning procedure after the assembly.
- Make sure the sensor module’s vent hole is not blocked because of protection paints or high dust/dirt accumulation.
- Do not use or store the sensor in an atmosphere without oxygen (for example, pure nitrogen).

5.4 Environmental Influences

The sensor module is tested, qualified, and functional in the operation range of -40°C to +65°C. Temperature or relative humidity compensation are not required but are recommended for best performance. Use a humidity and temperature sensor in conjunction with the ZMOD4510 whenever possible. If relative humidity and temperature

Downloaded from Arrow.com.

values are provided to the algorithm, the ZMOD4510 automatically uses these values for compensation. If no humidity and temperature sensor is available, provide the algorithm with the default values, RH = 50% and temperature = -300°C. This sets a default humidity value for the algorithm and enables the internal temperature measurement of the ZMOD4510. If no temperature or humidity data are provided the algorithm will use default values, which may lead to an offset of ±1 EPA level according to Table 6.

For some environments, an interference response to siloxanes is of concern; however, the ZMOD4510 has been proven to be resistant against siloxanes. A maximum potential life-time exposure has been simulated in all ZMOD4510 operation modes by applying the chemicals D4 (Octamethylcyclotetrasiloxane) and D5 (Decamethylcyclopentasiloxane) in high concentration. Change in sensitivity during 15,000 ppm·h exposure with D4 and D5 is typically 8%.

6. Assembly Restrictions, Operation, Integration Notes, and Storage

When implementing the ZMOD4510 in electrical circuit boards, a gas sensor module may react to chemicals during the assembly process and to outgassing components, such as resins from the printed circuit board (PCB) assembly. A standard soldering profile can be used to assemble the ZMOD4510 on the user's PCB and should fulfill the IPC/JEDEC J-STD-020C Standard ("Moisture/Reflow Sensitivity Classification for Non-hermetic Solid State Surface Mount Devices"). A typical lead-free reflow solder profile is shown in Figure 3. After assembly, an outgassing of the PCB and electronic components must be considered, especially when operating the sensor module at elevated temperatures. This will ultimately influence the sensor signal and accuracy.

A PCB heat treatment before assembling the ZMOD4510 is recommended. After the gas sensor module assembly, no coating, cleaning, or ultrasonic bath should be applied to the PCB. Also, sensor module parts should be cleaned after assembly by using the cleaning library provided with the firmware to remove contamination of solder vapor or from storage from the MOx surface. If the sensor module does not show full performance after a cleaning cycle, a change to the protection sticker package is recommended (see Ordering Information).

Store the sensor module in an antistatic metallic bag with a low VOC background after the sensor module is removed from its original packaging or the assembled PCB is populated. The optimal storage conditions are < 1ppm TVOC, < 10ppb O_3, < 10ppb NO_2, 10°C to 50°C, and humidity levels within 20% to 80%RH. If the sensor is stored within these conditions, no sensor degradation is expected for a shelf life of at least 10 years (storage time). If the sensor module is stored outside of these conditions for extended periods of time, the sensor module readings can exhibit a temporary offset. The sensor module can be reconditioned and brought back to its calibration state by operation for 24 hours to 48 hours in clean air.

Note: The sensor must not be stored in pure nitrogen. This will lead to sensor failure.

Downloaded from Arrow.com.

To receive the complete *Renesas Environmental Sensor Guidelines* with detailed information and on assembly, material outgassing, test and validation procedures, contact Renesas via the Technical Support page. A short version is available on the product webpage.

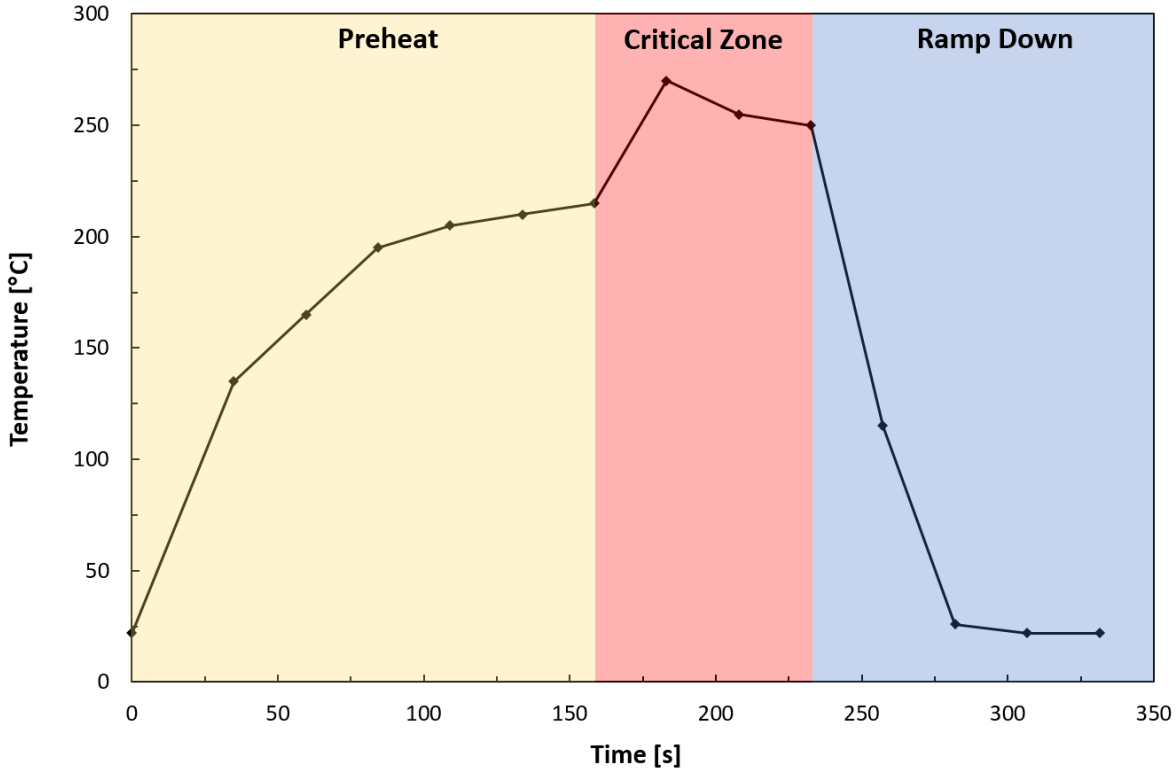

Figure 6. Typical Solder Profile

7. Test and Calibration

As a unique feature, all sampled gas sensor modules are fully tested during Renesas' final test. The final test parameters in Table 9 are applied for each ZMOD4510. All sensor modules are pre-stabilized in the final test although the user may see a slight change in the module's raw signal during an initial warm-up phase during the first operation. The gas sensor module qualification is based on JEDEC (JESD47) and its subsequent standard (JESD22, JESD78, etc.); it has been tested for a lifetime of 10 years. Renesas has proven a MOx lifetime of over 20+ years in actual continuous operation in conditions without exposures to stressful environments.

Table 9. Final Test Parameters

Test	Test Object	Parameters	Test Results Saved in NVM?
Electrical	ASIC	Voltages, current consumption, frequencies, scan pattern	No
Electrical	Module	Calibration conditions, tracking ID, resistances	Yes
Gas	Module	Sensitivity parameters (slope and intercept) at stimulation with different gas concentrations	Yes
Gas	Module	Pre-stabilization	No

Downloaded from Arrow.com.

8. I²C Interface and Data Transmission Protocol

The I²C slave device interface supports various bus speeds: Standard Mode (≤100kHz) and Fast Mode (≤400kHz).

By default, the 7-bit slave address for the serial I²C data interface is set to 33_{HEX}. The implemented data transmission protocol is similar to the one used for conventional EEPROM devices. The register to read/write is selected by a register address pointer. This address pointer must be set during an I²C write operation. For read access a repeated START condition but no STOP condition should be sent. After transmission of a register, the address pointer is automatically incremented. A STOP condition ends the whole transmission. An increment from the address FF_{HEX} rolls over to 00_{HEX}. The bus clear procedure (in other words, send nine clock pulses) is not implemented. To use a bus clear, the ZMOD4510's RES_N pin must be kept low while sending the nine clock pulses. I²C bus scans must stay within a valid range below reserved address 0x78.

For an example of the I²C data transmission protocol, see Figure 7. For information on I²C bus timing, see Figure 8. For I²C bus characteristics, see Table 10, which explains how to set up the interface. All other values are according to the I²C standard. Although the ZMOD4510 has an I²C interface, the user is not intended to modify any registers because a configuration change will affect the sensor module's performance, reliability, and accuracy. The API provided with the downloadable firmware package on the website manages all necessary sensor module communication.

To validate the general MCU-specific I²C read/write driver without the use of Renesas firmware, write random values to registers 0x88 to 0x8B and read them afterwards. After this register testing, erase the testing code and reset the device by disconnecting the power support; otherwise the device may not operate properly.

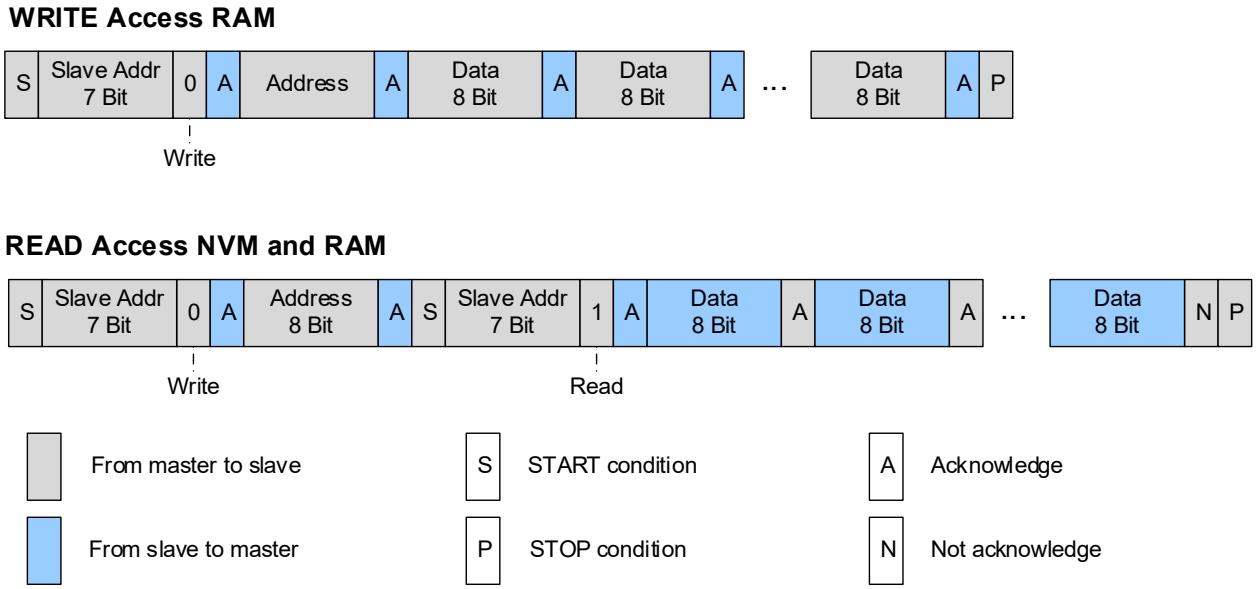

Figure 7. I²C Data Transmission Protocol

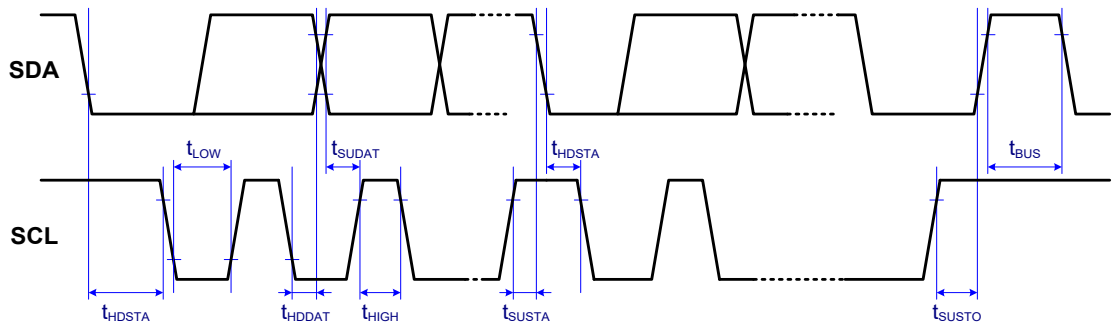

Figure 8. Bus Timing

Downloaded from Arrow.com.

Table 10. Bus Timing Characteristics

Symbol	Parameter	Standard Mode	Fast Mode	Units
f_{SCL}	Maximum SCL clock frequency	100	400	kHz
t_{HDSTA}	Minimum START condition hold time relative to SCL edge	0.1	0.1	µs
t_{LOW}	Minimum SCL clock low width	0.2	0.3	µs
t_{HIGH}	Minimum SCL clock high width	0.1	0.1	µs
t_{SUSTA}	Minimum START condition setup time relative to SCL edge	0.1	0.1	µs
t_{HDDAT}	Minimum data hold time on SDA relative to SCL edge	0	0	µs
t_{SUDAT}	Minimum data setup time on SDA relative to SCL edge	0.1	0.1	µs
t_{SUSTO}	Minimum STOP condition setup time on SCL	4	0.6	µs
t_{BUS}	Minimum bus free time between stop condition and start condition	4.7	1.3	µs

9. Package Outline Drawings

The ZMOD4510's different packages are listed in Table 11.

Table 11. Package Options

Part Number	Version	Comment	Package Link
ZMOD4510AI1	Standard	Standard package.	3.0 × 3.0 × 0.7 mm, LGG12D1
ZMOD4510AI2	Sticker	This package shipped with a sticker on top of the lid to protect sensor during assembly. *Note*: The sticker must be removed after assembly.	
ZMOD4510AI3	Waterproof	This package uses a membrane to get IP67 rating.	3.0 × 3.0 × 0.9 mm, LGG12D2
ZMOD4510AI4	Waterproof + Sticker	This package uses a membrane to get IP67 rating and is shipped with a sticker on top of the lid to protect sensor during assembly. *Note*: The sticker must be removed after assembly.	

10. Marking Diagrams

Without membrane (ZMOD4510AI1 and -AI2)

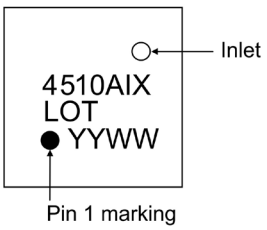

- Line 1 is the truncated part number. "X" is the package version.
- Line 2 – "LOT" denotes the assembly lot number.
- Line 2 – "YYWW" are the last two digit of the year and week that the part was assembled.

With membrane (ZMOD4510AI3 and -AI4)

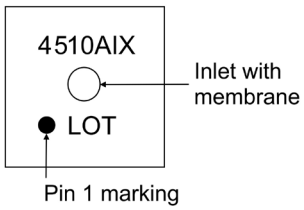

- Line 1 is the truncated part number. "X" is the package version.
- Line 2 – "LOT" denotes the assembly lot number.

Downloaded from Arrow.com.

11. Ordering Information

Part Number	Description and Package	MSL Rating	Carrier Type	Temp. Range
ZMOD4510AI1V	ZMOD4510 Sensor Module, 3.0 × 3.0 × 0.7 mm 12-LGA	3	Tray	-40° to +85°C
ZMOD4510AI1R	ZMOD4510 Sensor Module, 3.0 × 3.0 × 0.7 mm 12-LGA	3	Reel	-40° to +85°C
ZMOD4510AI2V	ZMOD4510 Sensor Module, 3.0 × 3.0 × 0.7 mm 12-LGA, shipped with removable protection sticker	3	Tray	-40° to +85°C
ZMOD4510AI2R	ZMOD4510 Sensor Module, 3.0 × 3.0 × 0.7 mm 12-LGA, shipped with removable protection sticker	3	Reel	-40° to +85°C
ZMOD4510AI3V	ZMOD4510 Sensor Module, 3.0 × 3.0 × 0.9 mm 12-LGA, IP67 rating	3	Tray	-40° to +85°C
ZMOD4510AI3R	ZMOD4510 Sensor Module, 3.0 × 3.0 × 0.9 mm 12-LGA, IP67 rating	3	Reel	-40° to +85°C
ZMOD4510AI4V	ZMOD4510 Sensor Module, 3.0 × 3.0 × 0.9 mm 12-LGA, shipped with removable protection sticker and IP67 rating	3	Tray	-40° to +85°C
ZMOD4510AI4R	ZMOD4510 Sensor Module, 3.0 × 3.0 × 0.9 mm 12-LGA, shipped with removable protection sticker and IP67 rating	3	Reel	-40° to +85°C
ZMOD4510-EVK-HC	ZMOD4510 Evaluation Kit including the ZMOD4510 Sensor Board, ESCOM Communication Board (USB Interface) and Micro-USB Cable. The Gas Sensor Evaluation Software is available for download free of charge on ZMOD4510 Evaluation Kit product page.			
ZMOD4510-EVK-DB	ZMOD4510 Sensor Board as spare part for ZMOD4510 Evaluation Kit.			

12. Related Information

Visit the ZMOD4510 and ZMOD4510 Evaluation Kit (ZMOD4510-EVK) product pages on the Renesas website to download software and the latest version of related documents, such as application notes, white papers, product briefs, and third-party reports.

Note that some documents require logging in with a free customer account, which can be set up under the “LOG IN” button on the website. Some downloads require an additional step to complete a request form that appears when the link is clicked.

Downloaded from Arrow.com.

13. Glossary

Term	Description
ADC	Analog-to-Digital Converter
AI	Artificial Intelligence
AQI	Air Quality Index
CDM	Charged Device Model
CM	Common Mode Generator
EPA	Environmental Protection Agency (USA)
HBM	Human Body Model
LGA	Land Grid Array
LV	Low Voltage
MCU	Microcontroller Unit
MOx	Metal Oxide
MSL	Moisture Sensitivity Level
Mux	Multiplexer
n.a.	Not Applicable
NO_2	Nitrogen Dioxide
NVM	Nonvolatile Memory
O_3	Ozone
POR	Power-On Reset
RH	Relative Humidity
SDA	Serial Data
SCL	Serial Clock
SSC	Sensor Signal Conditioner
TST	Test
TVOC	Total Volatile Organic Compounds

Downloaded from Arrow.com.

14. Revision History

Revision	Date	Description
1.05	Mar 27, 2025	▪ Updated the operating temperature ▪ Updated I2C Bus Timing Characteristic ▪ Added EVK hardware spare parts ▪ Updated Marking Diagrams ▪ Added product picture ▪ Completed other minor edits
1.04	May 30, 2024	▪ Replaced OAQ 1st Gen with NO2 O3 operation mode. ▪ Renamed OAQ 2nd Gen to ULP O3. ▪ Added “Conditioning and Sensor Self-Check Status”. ▪ Completed minor changes throughout. ▪ Migrated the document to the latest template.
-	Jun 30, 2021	▪ Added an explanation of EPA AQI and FAST AQI. ▪ Corrected the part numbers in Package Options.
-	May 20, 2021	▪ Added OAQ 2nd Gen and Package options. ▪ Completed minor changes throughout.
-	Feb 7, 2020	▪ Added ROHS compliance. ▪ Updated NVM data space. ▪ Updated on temperature measurements.
-	Sep 9, 2019	▪ Initial release.

Downloaded from Arrow.com.

12-LGA, Package Outline Drawing

3.0 x 3.0 x 0.7 mm Body, 0.5 x 1.0 mm Pitch

LGG12D1, PSC-4685-01, Rev 05, Page 1

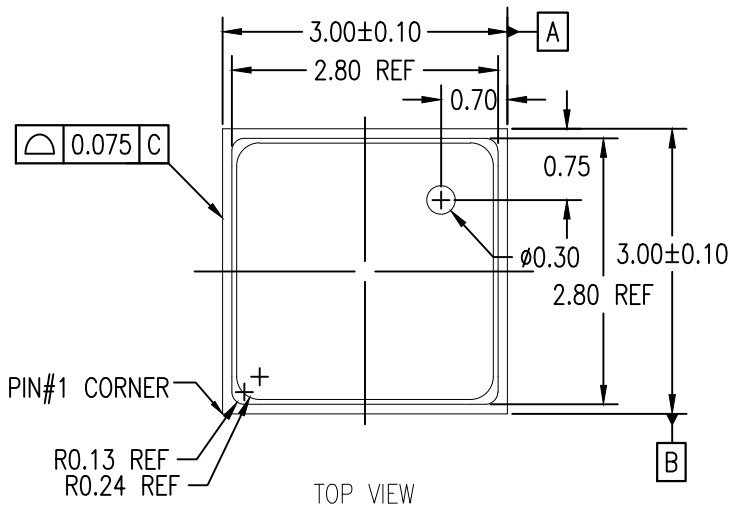

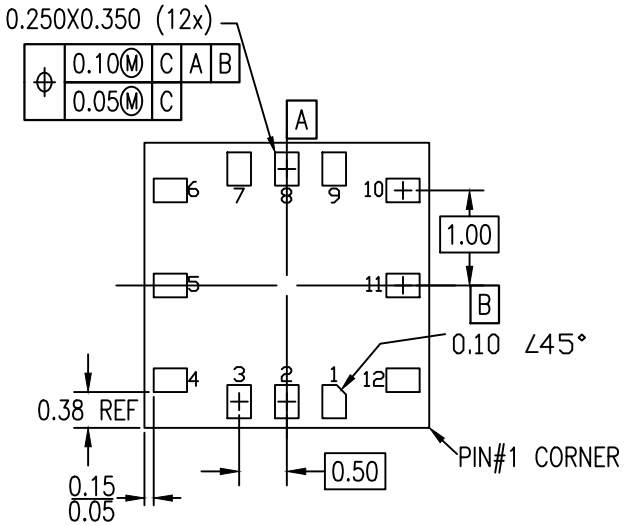

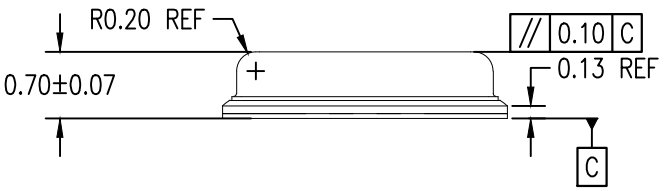

NOTES:

1. ALL DIMENSIONING AND TOLERANCING CONFORM TO ANSI Y14.5M-1982
2. ALL DIMENSION ARE IN MILLIMETERS.
3. UNLESS SPECIFIED, THE TOLERANCE OF +/-0.05MM APPLIES TO DIMENSIONS OF 2 DECIMALS, AND +/-0.012MM APPLIES TO DIMENSIONS OF 3 DECIMALS.

© Renesas Electronics Corporation

Downloaded from Arrow.com.

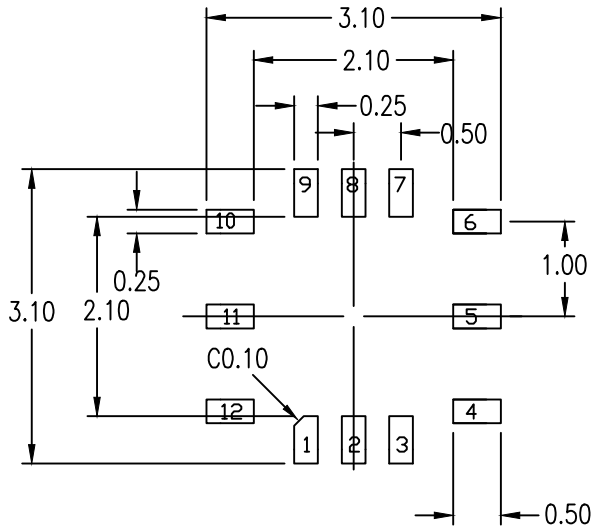

RECOMMENDED LAND PATTERN DIMENSION

NOTES:

1. ALL DIMENSION ARE IN MM. ANGLES IN DEGREES.
2. TOP DOWN VIEW. AS VIEWED ON PCB.
3. NSMD LAND PATTERN ASSUMED.
4. LAND PATTERN RECOMMENDATION PER IPC-7351B GENERIC REQUIREMENT FOR SURFACE MOUNT DESIGN AND LAND PATTERN.

Package Revision History

Date Created	Rev No.	Description
Sept 12, 2019	Rev 01.	Add Dimension on Gal Inlet Hole
Dec 17, 2019	Rev 02	Add Location Dimension Gal Inlet
Mar 10, 2021	Rev 03	Add Tolerance for Entire Body
Apr 27, 2022	Rev 04	Remove PDF SHX
June 20, 2023	Rev 05	Changed body size tolerance to standard tolerance

© Renesas Electronics Corporation

Downloaded from Arrow.com.

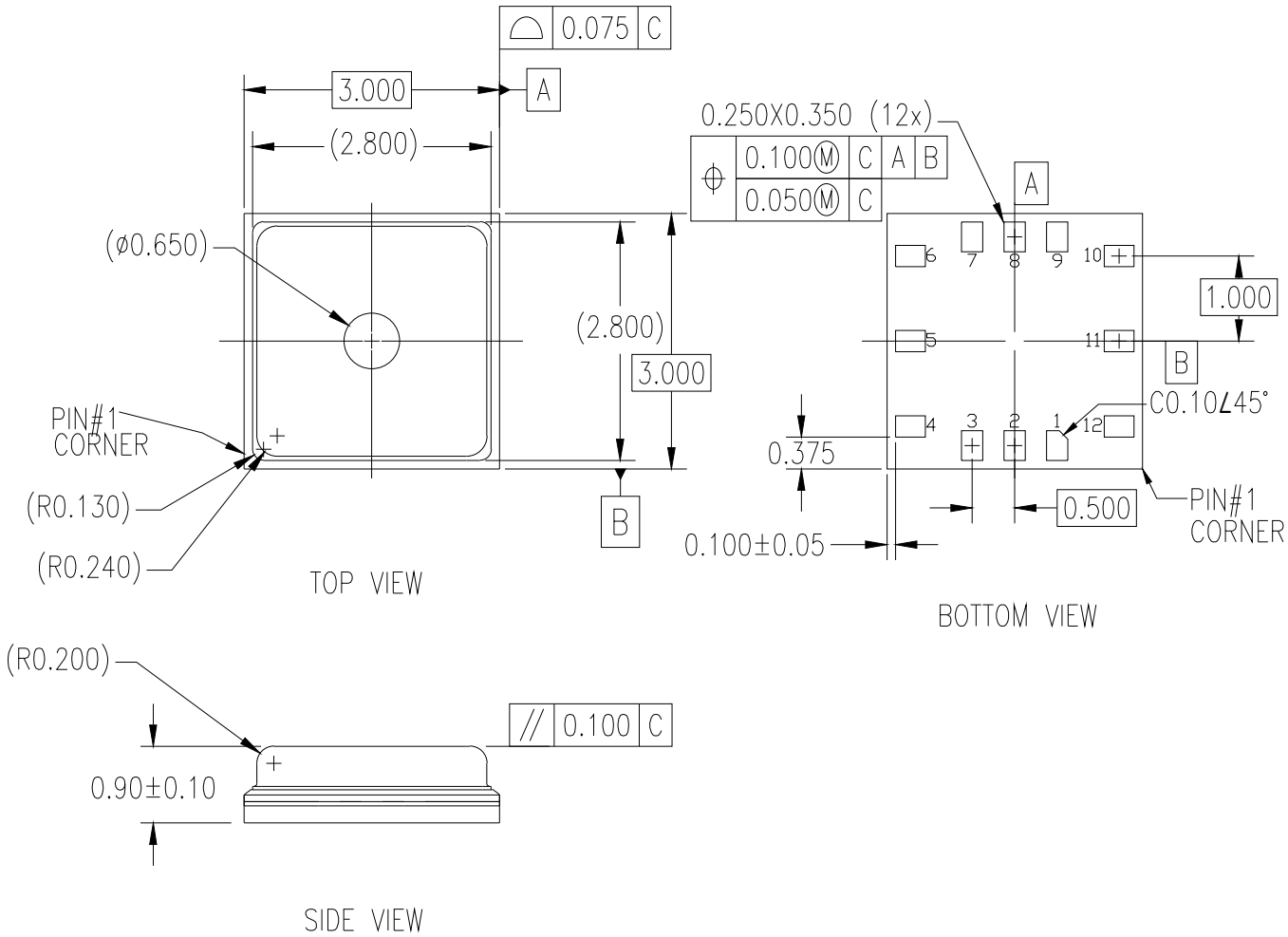

NOTES:

1. ALL DIMENSIONING AND TOLERANCING CONFORM TO ANSI Y14.5M-1982
2. ALL DIMENSION ARE IN MILLIMETERS

© Renesas Electronics Corporation

Downloaded from Arrow.com.

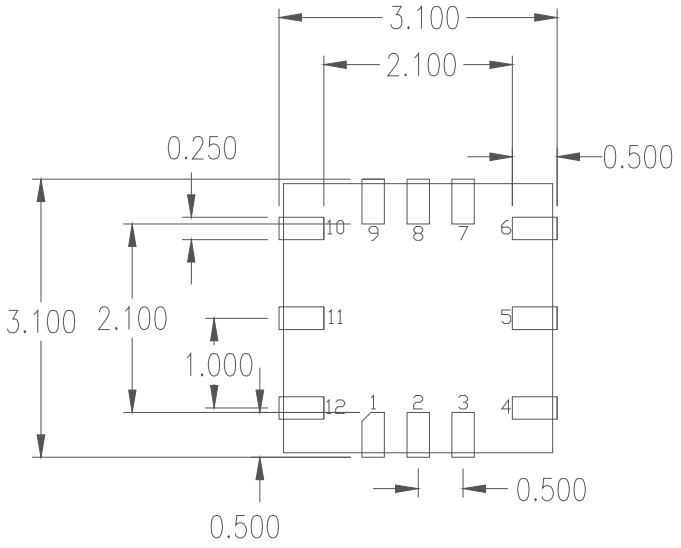

RECOMMENDED LAND PATTERN DIMENSION

NOTES:
1. ALL DIMENSION ARE IN MM. ANGLES IN DEGREES
2. TOP DOWN VIEW ON PCB
3. LAND PATTERN RECOMMENDATION PER IPC-7351B GENERIC REQUIREMENT FOR SURFACE MOUNT DESIGN AND LAND PATTERN

Date Created	Rev No.	Package Revision History
April 24, 2020	Rev 00	Initial release

© Renesas Electronics Corporation

Downloaded from Arrow.com.

IMPORTANT NOTICE AND DISCLAIMER

RENESAS ELECTRONICS CORPORATION AND ITS SUBSIDIARIES (“RENESAS”) PROVIDES TECHNICAL SPECIFICATIONS AND RELIABILITY DATA (INCLUDING DATASHEETS), DESIGN RESOURCES (INCLUDING REFERENCE DESIGNS), APPLICATION OR OTHER DESIGN ADVICE, WEB TOOLS, SAFETY INFORMATION, AND OTHER RESOURCES “AS IS” AND WITH ALL FAULTS, AND DISCLAIMS ALL WARRANTIES, EXPRESS OR IMPLIED, INCLUDING, WITHOUT LIMITATION, ANY IMPLIED WARRANTIES OF MERCHANTABILITY, FITNESS FOR A PARTICULAR PURPOSE, OR NON-INFRINGEMENT OF THIRD-PARTY INTELLECTUAL PROPERTY RIGHTS.

These resources are intended for developers who are designing with Renesas products. You are solely responsible for (1) selecting the appropriate products for your application, (2) designing, validating, and testing your application, and (3) ensuring your application meets applicable standards, and any other safety, security, or other requirements. These resources are subject to change without notice. Renesas grants you permission to use these resources only to develop an application that uses Renesas products. Other reproduction or use of these resources is strictly prohibited. No license is granted to any other Renesas intellectual property or to any third-party intellectual property. Renesas disclaims responsibility for, and you will fully indemnify Renesas and its representatives against, any claims, damages, costs, losses, or liabilities arising from your use of these resources. Renesas' products are provided only subject to Renesas' Terms and Conditions of Sale or other applicable terms agreed to in writing. No use of any Renesas resources expands or otherwise alters any applicable warranties or warranty disclaimers for these products.

(Disclaimer Rev.1.01)

Corporate Headquarters

TOYOSU FORESIA, 3-2-24 Toyosu,
Koto-ku, Tokyo 135-0061, Japan
www.renesas.com

Trademarks

Renesas and the Renesas logo are trademarks of Renesas Electronics Corporation. All trademarks and registered trademarks are the property of their respective owners.

Contact Information

For further information on a product, technology, the most up-to-date version of a document, or your nearest sales office, please visit www.renesas.com/contact-us/.

© 2026 Renesas Electronics Corporation. All rights reserved.

Downloaded from Arrow.com.