XCL210 Series

50mA/200mA Inductor Built-in Step-Down “micro DC/DC” Converters

☆Green Operation Compatible

■GENERAL DESCRIPTION

The XCL210 series is a synchronous step-down micro DC/DC converter which integrates an inductor and a control IC in one tiny package (2.0mm×2.5mm, h=1.0mm). An internal coil simplifies the circuit and enables minimization of noise and other operational trouble due to the circuit wiring. A wide operating voltage range of 2.0V to 6.0V enables support for applications that require an internally fixed output voltage from 1.0V to 4.0V in increments of 0.05V.
During stand-by, all circuits are shutdown to reduce current consumption to as low as 0.1μA or less.
With the built-in UVLO (Under Voltage Lock Out) function, the internal P-channel MOS driver transistor is forced OFF when input voltage becomes UVLO detect Voltage or lower.
The XCL210 integrate C_L discharge function which enables the electric charge at the output capacitor C_L to be discharged via the internal discharge switch located between the Lx and V_{SS} pins. When the devices enter stand-by mode, output voltage quickly returns to the V_{SS} level as a result of this function.

■APPLICATIONS

- Wearable Devices
- Smart meters
- Bluetooth units
- Energy Harvest devices
- Backup power supply circuits
- Portable game consoles
- Devices with 1 Lithium cell

■FEATURES

Input Voltage	:	2.0V ~ 6.0V
Output Voltage	:	1.0V ~ 4.0V (±2.0%)
Control Methods	:	PFM control
Output Current	:	200mA (Type A/C) 50mA (Type B/D)
Supply Current	:	0.5μA
High Efficiency	:	93% (V_{IN}=3.6V,V_{OUT}=3.0V/100μA)
Function	:	UVLO Short Circuit Protection C_L Discharge(Type C/D)
Capacitor	:	Low ESR Ceramic Capacitor
Operating Ambient Temperature	:	-40℃ ~ 85℃
Packages	:	CL-2025-02
Environmentally Friendly	:	EU RoHS Compliant, Pb Free

■TYPICAL APPLICATION CIRCUIT

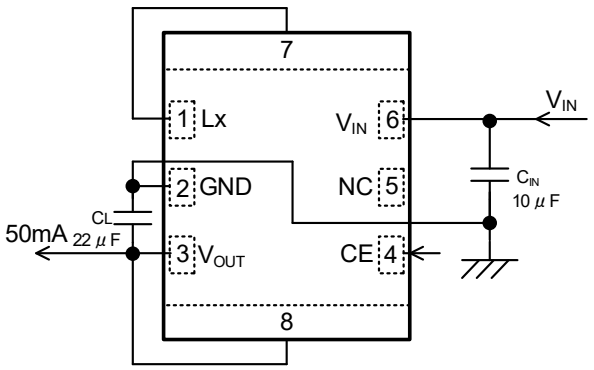

■ TYPICAL PERFORMANCE CHARACTERISTICS

XCL210B301GR-G (V_{OUT}=3.0V)

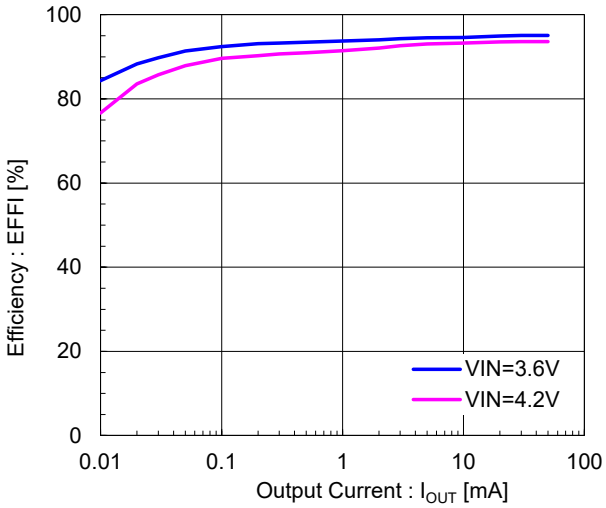

Downloaded from Arrow.com.

■BLOCK DIAGRAM

XCL210 Series, Type A/B

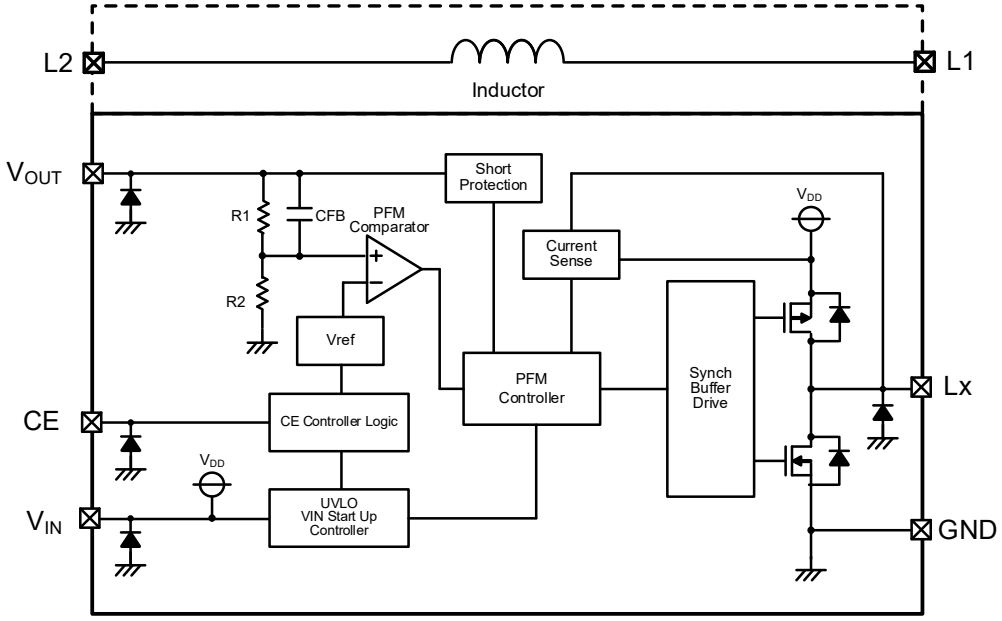

* XCL210A and B type do not have C_L Discharge function.
* Diodes inside the circuits are ESD protection diodes and parasitic diodes.

XCL210 Series, Type C/D

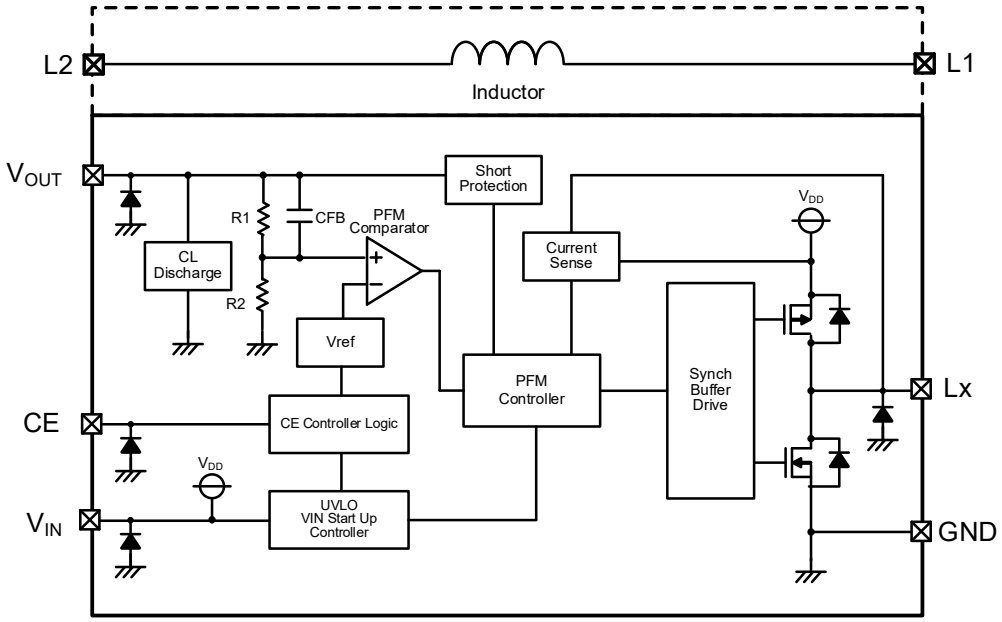

* Diodes inside the circuits are ESD protection diodes and parasitic diodes.

Downloaded from Arrow.com.

■PRODUCT CLASSIFICATION

●Ordering information

XCL210①②③④⑤⑥-⑦ PFM control

DESIGNATOR	ITEM	SYMBOL	DESCRIPTION
①	Product Type	A	I_{OUT}=200mA , Without C_L Auto Discharge
		B	I_{OUT}=50mA Without C_L Auto Discharge
		C	I_{OUT}=200mA , With C_L Auto Discharge
		D	I_{OUT}=50mA, With C_L Auto Discharge
②③	Output Voltage	10 ~ 40	Output voltage options e.g.) 1.2V → ② = 1 ③ = 2 1.25V→ ② = 1 ③ = C 0.05V increments : 0.05=A, 0.15=B, 0.25=C, 0.35=D, 0.45=E, 0.55=F, 0.65=H, 0.75=K, 0.85=L, 0.95=M
④	Fixed number	1	Fixed number
⑤⑥-⑦(*1)	Package (Order Unit)	GR-G	CL-2025-02 (3,000pcs/Reel)

(*1) The “-G” suffix denotes Halogen and Antimony free as well as being fully EU RoHS compliant.

Downloaded from Arrow.com.

■PIN CONFIGURATION

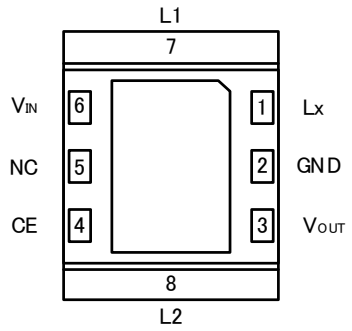

(BOTTOM VIEW)

* The dissipation pad for the CL-2025-02 package should be solder-plated in recommended mount pattern and metal masking so as to enhance mounting strength and heat release.
The mount pattern should be connected to GND pin (No.2).

■PIN ASSIGNMENT

PIN NUMBER	PIN NAME	FUNCTIONS
1	L_X	Switching
2	GND	Ground
3	V_{OUT}	Output Voltage
4	CE	Chip Enable
5	NC	No Connection
6	V_{IN}	Power Input
7	L1	Inductor Electrodes
8	L2	Inductor Electrodes

■CE PIN FUNCTION

PIN NAME	SIGNAL	STATUS
CE	H	Operation (All Types)
	L	Stand-by (All Types)

* Please do not leave the CE pin open.

■ABSOLUTE MAXIMUM RATINGS

PARAMETER	SYMBOL	RATINGS	UNITS
V_{IN} Pin Voltage	V_{IN}	-0.3 ~ 7.0	V
L_X Pin Voltage	V_{LX}	-0.3 ~ V_{IN} + 0.3 or 7.0 (*1)	V
V_{OUT} Pin Voltage	V_{OUT}	-0.3 ~ V_{IN} + 0.3 or 7.0 (*1)	V
CE Pin Voltage	V_{CE}	-0.3 ~ 7.0	V
L_X Pin Current	I_{LX}	1000	mA
Power Dissipation (Ta=25˚C)	Pd	1000 (40mm x 40mm Standard board) (*2)	mW
Operating Ambient Temperature	Topr	-40 ~ 85	˚C
Storage Temperature	Tstg	-55 ~ 125	˚C

* All voltages are described based on the GND.
(*1) The maximum value is the lower of either VIN + 0.3V or 7.0V.
(*2) The power dissipation figure shown is PCB mounted and is for reference only.
Please refer to PACKAGING INFORMATION for the mounting condition.

Downloaded from Arrow.com.

■ELECTRICAL CHARACTERISTICS

Ta=25˚C

●XCL210Axx1GR-G, without C_L discharge function

PARAMETER	SYMBOL	CONDITIONS	MIN.	TYP.	MAX.	UNITS	CIRCUIT
Input Voltage	V_{IN}	-	2.0	-	6.0	V	①
Output Voltage	$V_{OUT(E)}$ (*2)	Resistor connected with L_X pin. Voltage which L_X pin changes "L" to "H" level while V_{OUT} is decreasing.		E1		V	②
UVLO Release Voltage	$V_{UVLO(E)}$	V_{CE}=V_{IN}, V_{OUT}=0V. Resistor connected with L_X pin. Voltage which L_X pin changes "L" to "H" level while V_{IN} is increasing.	1.65	1.80	1.95	V	②
UVLO Hysteresis Voltage	$V_{HYS(E)}$	V_{CE}=V_{IN}, V_{OUT}=0V. Resistor connected with L_X pin. $V_{UVLO(E)}$ - Voltage which L_X pin changes "H" to "L" level while V_{IN} is decreasing.	0.11	0.15	0.24	V	②
Supply Current	Iq	V_{IN}=V_{CE}=$V_{OUT(T)}$+0.5V (*1), V_{IN}=2.0V, if $V_{OUT(T)}$≦1.5V (*1), V_{OUT}=$V_{OUT(T)}$+0.5V (*1), L_X=Open.		E2		μA	③
Standby Current	I_{STB}	V_{IN}=5.0V, V_{CE}=V_{OUT}=0V, L_X=Open.	-	0.1	1.0	μA	③
L_X SW "H" Leak Current	I_{LEAKH}	V_{IN}=5.0V, V_{CE}=V_{OUT}=0V, V_{LX}=0V.	-	0.1	1.0	μA	③
L_X SW "L" Leak Current	I_{LEAKL}	V_{IN}=5.0V, V_{CE}=V_{OUT}=0V, V_{LX}=5.0V.	-	0.1	1.0	μA	③
PFM Switching Current	I_{PFM}	V_{IN}=V_{CE}=$V_{OUT(T)}$+2.0V (*1), I_{OUT}=10mA.	260	330	400	mA	①
Maximum Duty Ratio (*3)	MAXDTY	V_{IN}=V_{OUT}=$V_{OUT(T)}$×0.95V(*1), V_{CE}=1.2V Resistor connected with L_X pin.	100	-	-	%	②
Efficiency (*4)	EFFI	V_{IN}=V_{CE}=5.0V, $V_{OUT(T)}$=4.0V (*1), I_{OUT}=30mA.	-	93	-	%	⑥
Efficiency (*4)	EFFI	V_{IN}=V_{CE}=3.6V, $V_{OUT(T)}$=3.3V (*1), I_{OUT}=30mA.	-	93	-	%	⑥
Efficiency (*4)	EFFI	V_{IN}=V_{CE}=3.6V, $V_{OUT(T)}$=1.8V (*1), I_{OUT}=30mA.	-	87	-	%	⑥
L_X SW "Pch" ON Resistance (*5)	R_{LXP}	V_{IN}=V_{CE}=5.0V, V_{OUT}=0V, I_{LX}=100mA.	-	0.4	0.65	Ω	④
L_X SW "Nch" ON Resistance	R_{LXN}	V_{IN}=V_{CE}=5.0V.	-	0.4 (*6)	-	Ω	-
Output Voltage Temperature Characteristics	ΔV_{OUT}/ (V_{OUT}·ΔTopr)	-40℃≦Topr≦85℃.	-	±100	-	ppm/℃	②
CE "High" Voltage	V_{CEH}	V_{OUT}=0V. Resistor connected with L_X pin. Voltage which L_X pin changes "L" to "H" level while V_{CE}=0.2→1.5V.	1.2	-	6.0	V	⑤
CE "Low" Voltage	V_{CEL}	V_{OUT}=0V. Resistor connected with L_X pin. Voltage which L_X pin changes "H" to "L" level while V_{CE}=1.5→0.2V.	GND	-	0.3	V	⑤
CE "High" Current	I_{CEH}	V_{IN}=V_{CE}=5.0V, V_{OUT}=0V, L_X=Open.	-0.1	-	0.1	μA	⑤
CE "Low" Current	I_{CEL}	V_{IN}=5.0V, V_{CE}=V_{OUT}=0V, L_X=Open.	-0.1	-	0.1	μA	⑤
Short Protection Threshold Voltage	V_{SHORT}	Resistor connected with L_X pin. Voltage which L_X pin changes "H" to "L" level while V_{OUT}= $V_{OUT(T)}$+0.1V→0V(*1).	0.4	0.5	0.6	V	②
Inductance Value	L	Test Frequency=1MHz	-	8.0	-	μH	
Inductor Rated Current	I_{DC_L}	ΔT=+40℃	-	600	-	mA	

Unless otherwise stated, V_{IN}=V_{CE}=5.0V

(*1) $V_{OUT(T)}$=Nominal Output Voltage

(*2) $V_{OUT(E)}$=Effective Output Voltage

The actual output voltage value $V_{OUT(E)}$ is the PFM comparator threshold voltage in the IC.

Therefore, the DC/DC circuit output voltage, including the peripheral components, is boosted by the ripple voltage average value.

Please refer to the characteristic example.

(*3) Not applicable to the products with $V_{OUT(T)}$ < 2.15V since it is out of operational volatge range.

(*4) EFFI=[{ (Output Voltage)×(Output Current)] / [(Input Voltage)×(Input Current)}]×100

(*5) L_X SW "Pch" ON resistance = (V_{IN} – V_{LX} pin measurement voltage) / 100mA

(*6) Designed value

Downloaded from Arrow.com.

■ELECTRICAL CHARACTERISTICS (Continued)

●XCL210Bxx1GR-G, without C_L discharge function

Ta=25°C

PARAMETER	SYMBOL	CONDITIONS	MIN.	TYP.	MAX.	UNITS	CIRCUIT
Input Voltage	V_{IN}	-	2.0	-	6.0	V	①
Output Voltage	$V_{OUT(E)}$ (*2)	Resistor connected with L_X pin.Voltage which L_X pin changes "L" to "H" level while V_{OUT} is decreasing.	E1			V	②
UVLO Release Voltage	$V_{UVLO(E)}$	V_{CE}=V_{IN}, V_{OUT}=0V. Resistor connected with L_X pin. Voltage which L_X pin changes "L" to "H" level while V_{IN} is increasing.	1.65	1.80	1.95	V	②
UVLO Hysteresis Voltage	$V_{HYS(E)}$	V_{CE}=V_{IN}, V_{OUT}=0V. Resistor connected with L_X pin. $V_{UVLO(E)}$ - Voltage which L_X pin changes "H" to "L" level while V_{IN} is decreasing.	0.11	0.15	0.24	V	②
Supply Current	Iq	V_{IN}=V_{CE}=$V_{OUT(T)}$+0.5V (*1),V_{IN}=2.0V, if $V_{OUT(T)}$≦1.5V (*1), V_{OUT}=$V_{OUT(T)}$+0.5V (*1), L_X=Open.	E2			μA	③
Standby Current	I_{STB}	V_{IN}=5.0V, V_{CE}=V_{OUT}=0V, L_X=Open.	-	0.1	1.0	μA	③
L_X SW "H" Leak Current	I_{LEAKH}	V_{IN}=5.0V, V_{CE}=V_{OUT}=0V, V_{LX}=0V.	-	0.1	1.0	μA	③
L_X SW "L" Leak Current	I_{LEAKL}	V_{IN}=5.0V, V_{CE}=V_{OUT}=0V, V_{LX}=5.0V.	-	0.1	1.0	μA	③
PFM Switching Current	I_{PFM}	V_{IN}=V_{CE}=$V_{OUT(T)}$+2.0V (*1), I_{OUT}=10mA.	115	180	250	mA	①
Maximum Duty Ratio (*3)	MAXDTY	V_{IN}=V_{OUT}=$V_{OUT(T)}$×0.95V(*1), V_{CE}=1.2V Resistor connected with L_X pin.	100	-	-	%	②
Efficiency (*4)	EFFI	V_{IN}=V_{CE}=5.0V,$V_{OUT(T)}$=4.0V (*1), I_{OUT}=30mA.	-	95	-	%	⑥
Efficiency (*4)	EFFI	V_{IN}=V_{CE}=3.6V, $V_{OUT(T)}$=3.3V (*1), I_{OUT}=30mA.	-	95	-	%	⑥
Efficiency (*4)	EFFI	V_{IN}=V_{CE}=3.6V, $V_{OUT(T)}$=1.8V (*1), I_{OUT}=30mA.	-	89	-	%	⑥
L_X SW "Pch" ON Resistance (*5)	R_{LXP}	V_{IN}=V_{CE}=5.0V, V_{OUT}=0V, I_{LX}=100mA.	-	0.4	0.65	Ω	④
L_X SW "Nch" ON Resistance	R_{LXN}	V_{IN}=V_{CE}=5.0V.	-	0.4 (*6)	-	Ω	-
Output Voltage Temperature Characteristics	ΔV_{OUT}/ (V_{OUT}·ΔTopr)	-40℃≦Topr≦85℃.	-	±100	-	ppm/℃	②
CE "High" Voltage	V_{CEH}	V_{OUT}=0V. Resistor connected with L_X pin. Voltage which L_X pin changes "L" to "H" level while V_{CE}=0.2→1.5V.	1.2	-	6.0	V	⑤
CE "Low" Voltage	V_{CEL}	V_{OUT}=0V. Resistor connected with L_X pin. Voltage which L_X pin changes "H" to "L" level while V_{CE}=1.5→0.2V.	GND	-	0.3	V	⑤
CE "High" Current	I_{CEH}	V_{IN}=V_{CE}=5.0V, V_{OUT}=0V, L_X=Open.	-0.1	-	0.1	μA	⑤
CE "Low" Current	I_{CEL}	V_{IN}=5.0V, V_{CE}=V_{OUT}=0V, L_X=Open.	-0.1	-	0.1	μA	⑤
Short Protection Threshold Voltage	V_{SHORT}	Resistor connected with L_X pin. Voltage which L_X pin changes "H" to "L" level while V_{OUT}=$V_{OUT(T)}$+0.1V→0V(*1).	0.4	0.5	0.6	V	②
Inductance Value	L	Test Frequency=1MHz	-	8.0	-	μH	
Inductor Rated Current	I_{DC_L}	ΔT=+40℃	-	600	-	mA	

Unless otherwise stated, V_{IN}=V_{CE}=5.0V

(*1) $V_{OUT(T)}$=Nominal Output Voltage

(*2) $V_{OUT(E)}$=Effective Output Voltage

The actual output voltage value $V_{OUT(E)}$ is the PFM comparator threshold voltage in the IC.

Therefore, the DC/DC circuit output voltage, including the peripheral components, is boosted by the ripple voltage average value.

Please refer to the characteristic example.

(*3) Not applicable to the products with $V_{OUT(T)}$ < 2.15V since it is out of operational volatge range.

(*4) EFFI=[{ (Output Voltage)×(Output Current)] / [(Input Voltage)×(Input Current)}]×100

(*5) L_X SW "Pch" ON resistance = (V_{IN} – V_{LX} pin measurement voltage) / 100mA

(*6) Designed value

Downloaded from Arrow.com.

■ELECTRICAL CHARACTERISTICS (Continued)

●XCL210Cxx1GR-G, with C_L Discharge Function

Ta=25˚C

PARAMETER	SYMBOL	CONDITIONS	MIN.	TYP.	MAX.	UNITS	CIRCUIT
Input Voltage	V_{IN}	-	2.0	-	6.0	V	①
Output Voltage	$V_{OUT(E)}$ (*2)	Resistor connected with L_X pin. Voltage which L_X pin changes "L" to "H" level while V_{OUT} is decreasing.		E1		V	②
UVLO Release Voltage	$V_{UVLO(E)}$	V_{CE}=V_{IN}, V_{OUT}=0V. Resistor connected with L_X pin. Voltage which L_X pin changes "L" to "H" level while V_{IN} is increasing.	1.65	1.80	1.95	V	②
UVLO Hysteresis Voltage	$V_{HYS(E)}$	V_{CE}=V_{IN}, V_{OUT}=0V. Resistor connected with L_X pin. $V_{UVLO(E)}$ - Voltage which L_X pin changes "H" to "L" level while V_{IN} is decreasing.	0.11	0.15	0.24	V	②
Supply Current	Iq	V_{IN}=V_{CE}=$V_{OUT(T)}$+0.5V (*1),V_{IN}=2.0V, if $V_{OUT(T)}$≦1.5V (*1), V_{OUT}=$V_{OUT(T)}$+0.5V (*1), L_X=Open.		E2		μA	③
Standby Current	I_{STB}	V_{IN}=5.0V, V_{CE}=V_{OUT}=0V, L_X=Open.	-	0.1	1.0	μA	③
L_X SW "H" Leak Current	I_{LEAKH}	V_{IN}=5.0V, V_{CE}=V_{OUT}=0V, V_{LX}=0V.	-	0.1	1.0	μA	③
L_X SW "L" Leak Current	I_{LEAKL}	V_{IN}=5.0V, V_{CE}=V_{OUT}=0V, V_{LX}=5.0V.	-	0.1	1.0	μA	③
PFM Switching Current	I_{PFM}	V_{IN}=V_{CE}=$V_{OUT(T)}$+2.0V (*1), I_{OUT}=10mA.	260	330	400	mA	①
Maximum Duty Ratio (*3)	MAXDTY	V_{IN}=V_{OUT}=$V_{OUT(T)}$×0.95V(*1), V_{CE}=1.2V Resistor connected with L_X pin.	100	-	-	%	②
Efficiency (*4)	EFFI	V_{IN}=V_{CE}=5.0V, $V_{OUT(T)}$=4.0V (*1), I_{OUT}=30mA.	-	93	-	%	⑥
Efficiency (*4)	EFFI	V_{IN}=V_{CE}=3.6V, $V_{OUT(T)}$=3.3V (*1), I_{OUT}=30mA.	-	93	-	%	⑥
Efficiency (*4)	EFFI	V_{IN}=V_{CE}=3.6V, $V_{OUT(T)}$=1.8V (*1), I_{OUT}=30mA.	-	87	-	%	⑥
L_X SW "Pch" ON Resistance (*5)	R_{LXP}	V_{IN}=V_{CE}=5.0V, V_{OUT}=0V, I_{LX}=100mA.	-	0.4	0.65	Ω	④
L_X SW "Nch" ON Resistance	R_{LXN}	V_{IN}=V_{CE}=5.0V.	-	0.4 (*6)	-	Ω	-
Output Voltage Temperature Characteristics	ΔV_{OUT}/ (V_{OUT}·ΔTopr)	-40℃≦Topr≦85℃.	-	±100	-	ppm/℃	②
CE "High" Voltage	V_{CEH}	V_{OUT}=0V. Resistor connected with L_X pin. Voltage which L_X pin changes "L" to "H" level while V_{CE}=0.2→1.5V.	1.2	-	6.0	V	⑤
CE "Low" Voltage	V_{CEL}	V_{OUT}=0V. Resistor connected with L_X pin. Voltage which L_X pin changes "H" to "L" level while V_{CE}=1.5→0.2V.	GND	-	0.3	V	⑤
CE "High" Current	I_{CEH}	V_{IN}=V_{CE}=5.0V, V_{OUT}=0V, L_X=Open.	-0.1	-	0.1	μA	⑤
CE "Low" Current	I_{CEL}	V_{IN}=5.0V, V_{CE}=V_{OUT}=0V, L_X=Open.	-0.1	-	0.1	μA	⑤
Short Protection Threshold Voltage	V_{SHORT}	Resistor connected with L_X pin. Voltage which L_X pin changes "H" to "L" level while V_{OUT}= $V_{OUT(T)}$+0.1V→0V(*1).	0.4	0.5	0.6	V	②
C_L Discharge	R_{DCHG}	V_{IN}=V_{OUT}=5.0V, V_{CE}=0V, L_X=Open.	55	80	105	Ω	③
Inductance Value	L	Test Frequency=1MHz	-	8.0	-	μH	
Inductor Rated Current	I_{DC_L}	ΔT=+40℃	-	600	-	mA	

Unless otherwise stated, V_{IN}=V_{CE}=5.0V

(*1) $V_{OUT(T)}$=Nominal Output Voltage

(*2) $V_{OUT(E)}$=Effective Output Voltage

The actual output voltage value $V_{OUT(E)}$ is the PFM comparator threshold voltage in the IC.
Therefore, the DC/DC circuit output voltage, including the peripheral components, is boosted by the ripple voltage average value.
Please refer to the characteristic example.

(*3) Not applicable to the products with $V_{OUT(T)}$ < 2.15V since it is out of operational volatge range.

(*4) EFFI=[{ (Output Voltage)×(Output Current)] / [(Input Voltage)×(Input Current)}]×100

(*5) L_X SW "Pch" ON resistance = (V_{IN} – V_{LX} pin measurement voltage) / 100mA

(*6) Designed value

Downloaded from Arrow.com.

■ELECTRICAL CHARACTERISTICS (Continued)

●XCL210Dxx1GR-G, with C_L Discharge Function

Ta=25˚C

PARAMETER	SYMBOL	CONDITIONS	MIN.	TYP.	MAX.	UNITS	CIRCUIT
Input Voltage	V_{IN}	-	2.0	-	6.0	V	①
Output Voltage	$V_{OUT(E)}$ (*2)	Resistor connected with L_X pin. Voltage which L_X pin changes "L" to "H" level while V_{OUT} is decreasing.	E1			V	②
UVLO Release Voltage	$V_{UVLO(E)}$	V_{CE}=V_{IN}, V_{OUT}=0V. Resistor connected with L_X pin. Voltage which L_X pin changes "L" to "H" level while V_{IN} is increasing.	1.65	1.80	1.95	V	②
UVLO Hysteresis Voltage	$V_{HYS(E)}$	V_{CE}=V_{IN}, V_{OUT}=0V. Resistor connected with L_X pin. $V_{UVLO(E)}$ - Voltage which L_X pin changes "H" to "L" level while V_{IN} is decreasing.	0.11	0.15	0.24	V	②
Supply Current	Iq	V_{IN}=V_{CE}=$V_{OUT(T)}$+0.5V (*1), V_{IN}=2.0V, if $V_{OUT(T)}$≦1.5V (*1), V_{OUT}=$V_{OUT(T)}$+0.5V (*1), L_X=Open.	E2			μA	③
Standby Current	I_{STB}	V_{IN}=5.0V, V_{CE}=V_{OUT}=0V, L_X=Open.	-	0.1	1.0	μA	③
L_X SW "H" Leak Current	I_{LEAKH}	V_{IN}=5.0V, V_{CE}=V_{OUT}=0V, V_{LX}=0V.	-	0.1	1.0	μA	③
L_X SW "L" Leak Current	I_{LEAKL}	V_{IN}=5.0V, V_{CE}=V_{OUT}=0V, V_{LX}=5.0V.	-	0.1	1.0	μA	③
PFM Switching Current	I_{PFM}	V_{IN}=V_{CE}=$V_{OUT(T)}$+2.0V (*1), I_{OUT}=10mA.	115	180	250	mA	①
Maximum Duty Ratio (*3)	MAXDTY	V_{IN}=V_{OUT}=$V_{OUT(T)}$×0.95V(*1), V_{CE}=1.2V Resistor connected with L_X pin.	100	-	-	%	②
Efficiency (*4)	EFFI	V_{IN}=V_{CE}=5.0V,$V_{OUT(T)}$=4.0V (*1), I_{OUT}=30mA.	-	95	-	%	⑥
Efficiency (*4)	EFFI	V_{IN}=V_{CE}=3.6V, $V_{OUT(T)}$=3.3V (*1), I_{OUT}=30mA.	-	95	-	%	⑥
Efficiency (*4)	EFFI	V_{IN}=V_{CE}=3.6V, $V_{OUT(T)}$=1.8V (*1), I_{OUT}=30mA.	-	89	-	%	⑥
L_X SW "Pch" ON Resistance (*5)	R_{LXP}	V_{IN}=V_{CE}=5.0V, V_{OUT}=0V, I_{LX}=100mA.	-	0.4	0.65	Ω	④
L_X SW "Nch" ON Resistance	R_{LXN}	V_{IN}=V_{CE}=5.0V.	-	0.4 (*6)	-	Ω	-
Output Voltage Temperature Characteristics	ΔV_{OUT}/ (V_{OUT}・ΔTopr)	-40℃≦Topr≦85℃.	-	±100	-	ppm/℃	②
CE "High" Voltage	V_{CEH}	V_{OUT}=0V. Resistor connected with L_X pin. Voltage which L_X pin changes "L" to "H" level while V_{CE}=0.2→1.5V.	1.2	-	6.0	V	⑤
CE "Low" Voltage	V_{CEL}	V_{OUT}=0V. Resistor connected with L_X pin. Voltage which L_X pin changes "H" to "L" level while V_{CE}=1.5→0.2V.	GND	-	0.3	V	⑤
CE "High" Current	I_{CEH}	V_{IN}=V_{CE}=5.0V, V_{OUT}=0V, L_X=Open.	-0.1	-	0.1	μA	⑤
CE "Low" Current	I_{CEL}	V_{IN}=5.0V, V_{CE}=V_{OUT}=0V, L_X=Open.	-0.1	-	0.1	μA	⑤
Short Protection Threshold Voltage	V_{SHORT}	Resistor connected with L_X pin. Voltage which L_X pin changes "H" to "L" level while V_{OUT}= $V_{OUT(T)}$+0.1V→0V(*1).	0.4	0.5	0.6	V	②
C_L Discharge	R_{DCHG}	V_{IN}=V_{OUT}=5.0V, V_{CE}=0V, L_X=Open.	55	80	105	Ω	③
Inductance Value	L	Test Frequency=1MHz	-	8.0	-	μH	
Inductor Rated Current	I_{DC}	ΔT=+40℃	-	600	-	mA	

Unless otherwise stated, V_{IN}=V_{CE}=5.0V

(*1) $V_{OUT(T)}$=Nominal Output Voltage

(*2) $V_{OUT(E)}$=Effective Output Voltage

The actual output voltage value $V_{OUT(E)}$ is the PFM comparator threshold voltage in the IC.

Therefore, the DC/DC circuit output voltage, including the peripheral components, is boosted by the ripple voltage average value.

Please refer to the characteristic example.

(*3) Not applicable to the products with $V_{OUT(T)}$ < 2.15V since it is out of operational volatge range.

(*4) EFFI=[{ (Output Voltage)×(Output Current)] / [(Input Voltage)×(Input Current)}]×100

(*5) L_X SW "Pch" ON resistance = (V_{IN} – V_{LX} pin measurement voltage) / 100mA

(*6) Designed value

Downloaded from Arrow.com.

■ELECTRICAL CHARACTERISTICS (Continued)

XCL210 Series voltage chart

SYMBOL	E1		E2		SYMBOL	E1		E2	
PARAMETER	OUTPUT VOLTAGE		SUPPLY CURRENT		PARAMETER	OUTPUT VOLTAGE		SUPPLY CURRENT	
UNITS: V	UNITS: V		UNITS: μA		UNITS: V	UNITS: V		UNITS: μA	
OUTPUT VOLTAGE	MIN.	MAX.	TYP.	MAX.	OUTPUT VOLTAGE	MIN.	MAX.	TYP.	MAX.
1.00	0.980	1.020	0.500	0.800	2.50	2.450	2.550	0.700	1.500
1.05	1.029	1.071			2.55	2.499	2.601		
1.10	1.078	1.122			2.60	2.548	2.652		
1.15	1.127	1.173			2.65	2.597	2.703		
1.20	1.176	1.224			2.70	2.646	2.754		
1.25	1.225	1.275			2.75	2.695	2.805		
1.30	1.274	1.326			2.80	2.744	2.856		
1.35	1.323	1.377			2.85	2.793	2.907		
1.40	1.372	1.428			2.90	2.842	2.958		
1.45	1.421	1.479			2.95	2.891	3.009		
1.50	1.470	1.530	0.500	0.900	3.00	2.940	3.060	0.800	2.100
1.55	1.519	1.581			3.05	2.989	3.111		
1.60	1.568	1.632			3.10	3.038	3.162		
1.65	1.617	1.683			3.15	3.087	3.213		
1.70	1.666	1.734			3.20	3.136	3.264		
1.75	1.715	1.785			3.25	3.185	3.315		
1.80	1.764	1.836			3.30	3.234	3.366		
1.85	1.813	1.887			3.35	3.283	3.417		
1.90	1.862	1.938			3.40	3.332	3.468		
1.95	1.911	1.989			3.45	3.381	3.519		
2.00	1.960	2.040	0.600	1.100	3.50	3.430	3.570	1.500	3.000
2.05	2.009	2.091			3.55	3.479	3.621		
2.10	2.058	2.142			3.60	3.528	3.672		
2.15	2.107	2.193			3.65	3.577	3.723		
2.20	2.156	2.244			3.70	3.626	3.774		
2.25	2.205	2.295			3.75	3.675	3.825		
2.30	2.254	2.346			3.80	3.724	3.876		
2.35	2.303	2.397			3.85	3.773	3.927		
2.40	2.352	2.448			3.90	3.822	3.978		
2.45	2.401	2.499			3.95	3.871	4.029		
					4.00	3.920	4.080		

Downloaded from Arrow.com.

■TEST CIRCUITS

< Circuit No.① >

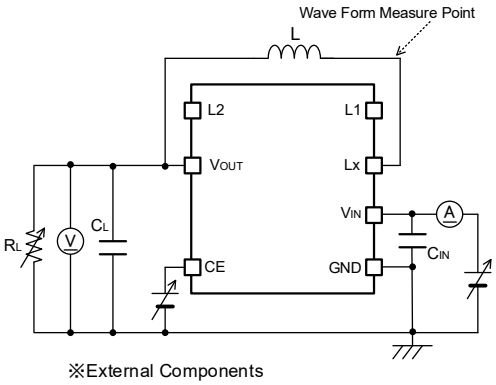

※External Components
L:10μH(Selected goods)
CIN:10μF(Ceramic)
CL:22μF(Ceramic)

< Circuit No.② >

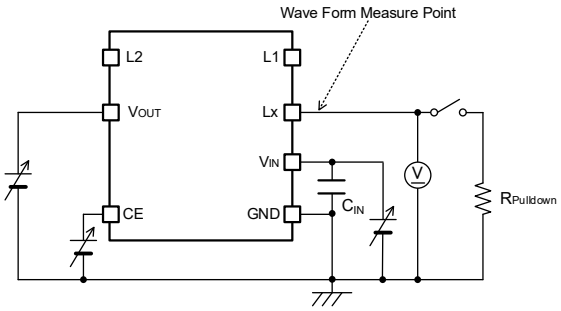

※External Components
CIN:10μF(Ceramic)
RPULLDOWN:100Ω

< Circuit No.③ >

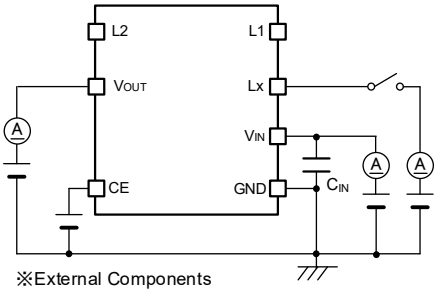

※External Components
CIN:10μF(Ceramic)

< Circuit No.④ >

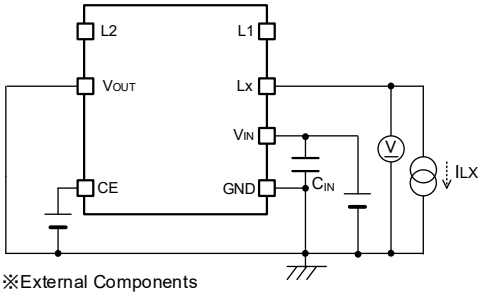

※External Components
CIN:10μF(Ceramic)

< Circuit No.⑤ >

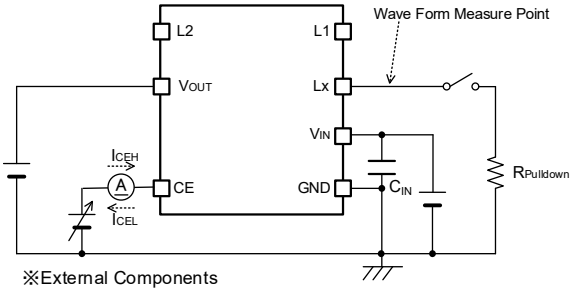

※External Components
CIN:10μF(Ceramic)
RPULLDOWN:100Ω

< Circuit No.⑥ >

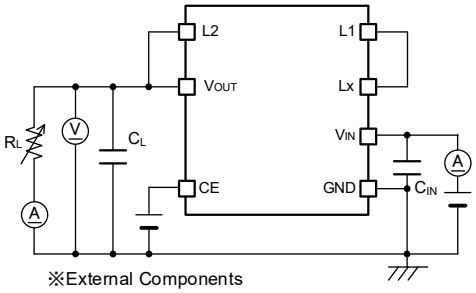

※External Components
CIN:10μF(Ceramic)
CL:22μF(Ceramic)

Downloaded from Arrow.com.

■TYPICAL APPLICATION CIRCUIT

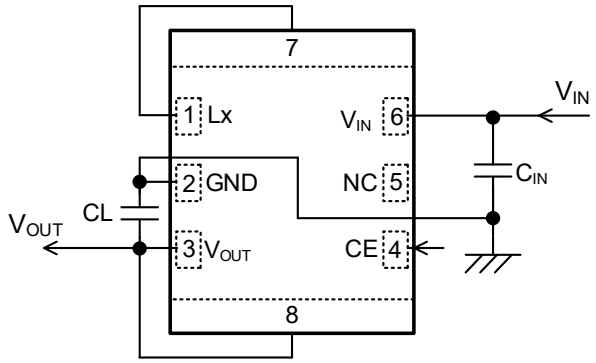

NOTE:
The integrated Inductor can be used only for this DC/DC converter.
Please do not use this inductor for other reasons.

	Manufacturer	Part Number	VALUE
C_{IN}	Taiyo Yuden	LMK107BBJ106MALT	10μF/10V
		LMK212ABJ106MG	10μF/10V
	TDK	C1608X5R1A106M	10μF/10V
		C2012X5R1A106M	10μF/10V
CL	Taiyo Yuden	LMK107BBJ226MA	22μF/10V
		LMK212BBJ226MG	22μF/10V
	TDK	C1608X5R1A226M	22μF/10V
		C2012X5R1A226M	22μF/10V

* Take capacitance loss, withstand voltage, and other conditions into consideration when selecting components.

Downloaded from Arrow.com.

■OPERATIONAL EXPLANATION

The XCL210 series consists of a reference voltage supply, PFM comparator, Pch driver Tr, Nch synchronous rectification switch Tr, current sensing circuit, PFM control circuit, CE control circuit, and others. (Refer to the block diagram below.)

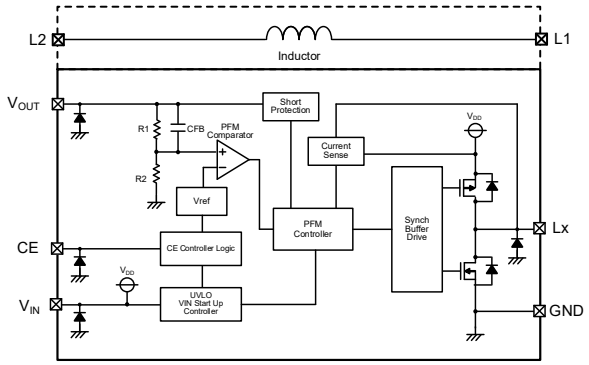

<BLOCK DIAGRAM TYPE A/B >

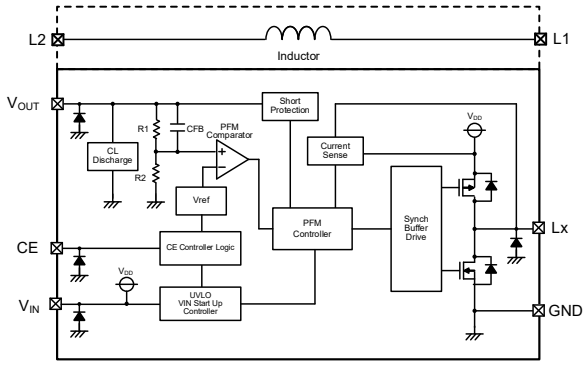

<BLOCK DIAGRAM TYPE C/D >

An ultra-low quiescent current circuit and synchronous rectification enable a significant reduction of dissipation in the IC, and the IC operates with high efficiency at both light loads and heavy loads. Current limit PFM is used for the control method, and even when switching current superposition occurs, increases of output voltage ripple are suppressed, allowing use over a wide voltage and current range. The IC is compatible with low-capacitance ceramic capacitors, and a small, high-performance step-down DC-DC converter can be created.

The actual output voltage $V_{OUT(E)}$ in the electrical characteristics is the threshold voltage of the PFM comparator in the block diagram. Therefore the average output voltage of the step-down circuit, including peripheral components, depends on the ripple voltage. Before use, test fully using the actual device.

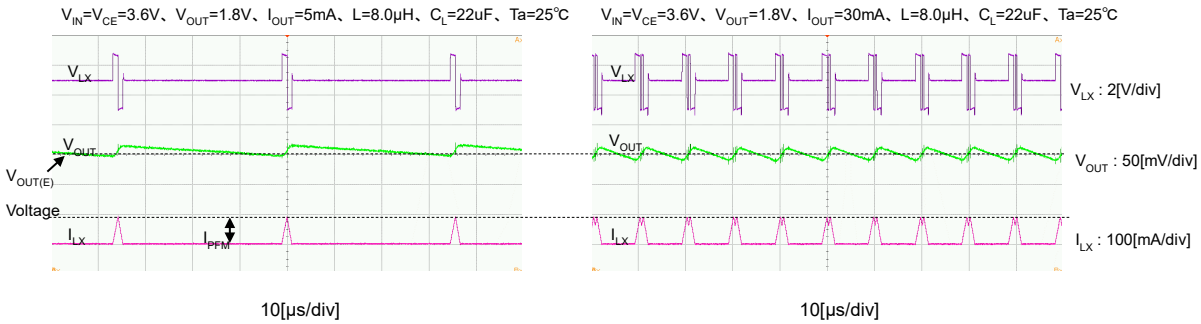

<Reference voltage supply (V_{REF})>

Reference voltage for stabilization of the output voltage of the IC.

Downloaded from Arrow.com.

■OPERATIONAL EXPLANATION (Continued)

<PFM control>
(1) The feedback voltage (FB voltage) is the voltage that results from dividing the output voltage with the IC internal dividing resistors R_{FB1} and R_{FB2}. The PFM comparator compares this FB voltage to V_{REF}. When the FB voltage is lower than V_{REF}, the PFM comparator sends a signal to the buffer driver through the PFM control circuit to turn on the Pch driver Tr. When the FB voltage is higher than V_{REF}, the PFM comparator sends a signal to prevent the Pch driver Tr from turning on.

(2) When the Pch driver Tr is on, the current sense circuit monitors the current that flows through the Pch driver Tr connected to the Lx pin. When the current reaches the set PFM switching current (I_{PFM}), the current sense circuit sends a signal to the buffer driver through the PFM control circuit. This signal turns off the Pch driver Tr and turns on the Nch synchronous rectification switch Tr.

(3) The on time (off time) of the Nch synchronous rectification switch Tr is dynamically optimized inside the IC. After the off time elapses and the PFM comparator detects that the V_{OUT} voltage is higher than the set voltage, the PFM comparator sends a signal to the PFM control circuit that prevents the Pch driver Tr from turning on. However, if the V_{OUT} voltage is lower than the set voltage, the PFM comparator starts Pch driver Tr on.

By continuously adjusting the interval of the linked operation of (1), (2) and (3) above in response to the load current, the output voltage is stabilized with high efficiency from light loads to heavy loads.

<PFM Switching Current >
The PFM switching current monitors the current that flows through the Pch driver Tr, and is a value that limits the Pch driver Tr current. The Pch driver Tr remains on until the coil current reaches the PFM switching current (I_{PFM}). An approximate value for this on-time t_{ON} can be calculated using the following equation:

$$t_{ON} = L \times I_{PFM} / (V_{IN} - V_{OUT})$$

<Maximum on-time function>
To avoid excessive ripple voltage in the event that the coil current does not reach the PFM switching current within a certain interval even though the Pch driver Tr has turned on and the FB voltage is above V_{REF}, the Pch driver Tr can be turned off at any timing using the maximum on-time function of the PFM control circuit. If the Pch driver Tr turns off by the maximum on-time function instead of the current sense circuit, the Nch synchronous rectification switch Tr will not turn on and the coil current will flow to the V_{OUT} pin by means of the parasite diode of the Nch synchronous rectification switch Tr.

<Through mode>
When the V_{IN} voltage is lower than the output voltage, through mode automatically activates and the Pch driver Tr stays on continuously.

(1) In through mode, when the load current is increased and the current that flows through the Pch driver Tr reaches a load current that is several tens of mA lower than the set PFM switching current (I_{PFM}), the current sense circuit sends a signal through the PFM control circuit to the buffer driver. This signal turns off the Pch driver Tr and turns on the Nch synchronous rectification switch Tr.

(2) After the on-time (off-time) of the Nch synchronous rectification switch Tr, the Pch driver Tr turns on until the current reaches the set PFM switching current (I_{PFM}) again.

If the load current is large as described above, operations (1) and (2) above are repeated. If the load current is several tens of mA lower than the PFM switching current (I_{PFM}), the Pch driver Tr stays on continuously.

<V_{IN} start mode>
When the V_{IN} voltage rises, V_{IN} start mode stops the short-circuit protection function during the interval until the FB voltage approaches V_{REF}. After the V_{IN} voltage rises and the FB voltage approaches V_{REF} by step-down operation, V_{IN} start mode is released. In order to prevent an excessive rush current while V_{IN} start mode is activated, the coil current flows to the V_{OUT} pin by means of the parasitic diode of the Nch synchronous rectification Tr. In V_{IN} start mode as well, the coil current is limited by the PFM switching current.

Downloaded from Arrow.com.

■OPERATIONAL EXPLANATION (Continued)

<Short-circuit protection function>

The short-circuit protection function monitors the V_{OUT} pin voltage, and if the V_{OUT} pin voltage drops below the Short Protection Threshold Voltage (V_{SHORT}) due to a short circuit or overcurrent, the short circuit protection function operates.
When the short-circuit protection function is activated, the Pch driver Tr and Nch Synchronous Switch Tr are held off. If the V_{OUT} pin voltage exceeds the Short Protection Threshold Voltage (V_{SHORT}) after the short-circuit protection function is activated, normal operation resumes.

To cancel the short-circuit protection function, it is necessary to start the IC after putting the IC in the standby state with the CE function, or to raise the input voltage after setting the input voltage below the UVLO detection voltage ($V_{UVLO(E)}$-$V_{HYS(E)}$).

<UVLO function>

When the V_{IN} pin voltage drops below the UVLO detection voltage, the IC stops switching operation at any selected timing, turns off the Pch driver Tr and Nch synchronous rectification switch Tr (UVLO mode). When the V_{IN} pin voltage recovers and rises above the UVLO release voltage, the IC restarts operation.

<C_L discharge function>

On the XCL210 series, a C_L discharge function is available as an option (Type C/D). This function enables quick discharging of the C_L load capacitance when "L" voltage is input into the CE pin by the Nch Tr connected between the V_{OUT}-GND pins, or in UVLO mode. This prevents malfunctioning of the application in the event that a charge remains on C_L when the IC is stopped. The discharge time is determined by C_L and the C_L discharge resistance R_{DCHG}, including the Nch Tr (refer to the diagram below). Using this time constant $\tau = C_L \times R_{DCHG}$, the discharge time of the output voltage is calculated by means of the equation below.

$$V = V_{OUT} \times e^{-t/\tau}, \text{ or in terms of } t,\ t = \tau \ln(V_{OUT} / V)$$

V	: Output voltage after discharge
V_{OUT}	: Set output voltage
t	: Discharge time
C_L	: Value of load capacitance (C_L)
R_{DCHG}	: Value of C_L discharge resistance Varies by power supply voltage.
τ	: $C_L \times R_{DCHG}$

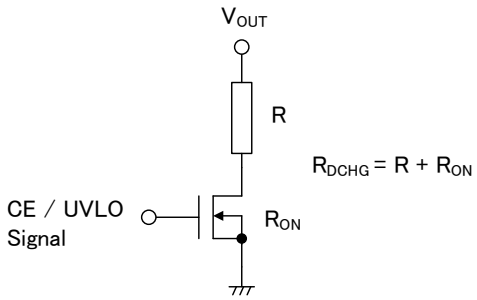

The C_L discharge function is not available on the Type A/B

Downloaded from Arrow.com.

■NOTE ON USE

1. Be careful not to exceed the absolute maximum ratings for externally connected components and this IC.

2. The DC/DC converter characteristics greatly depend not only on the characteristics of this IC but also on those of externally connected components, so refer to the specifications of each component and be careful when selecting the components. Be especially careful of the characteristics of the capacitor used for the load capacity C_L and use a capacitor with B characteristics (JIS Standard) or an X7R/X5R (EIA Standard) ceramic capacitor.

3. Use a ground wire of sufficient strength. Ground potential fluctuation caused by the ground current during switching could cause the IC operation to become unstable, so reinforce the area around the GND pin of the IC in particular.

4. Mount the externally connected components in the vicinity of the IC. Also use short, thick wires to reduce the wire impedance.

5. When the voltage difference between V_{IN} and V_{OUT} is small, switching energy increases and there is a possibility that the ripple voltage will be too large. Before use, test fully using the actual device.

6. The CE pin does not have an internal pull-up or pull-down, etc. Apply the prescribed voltage to the CE pin.

7. If other than the recommended inductance and capacitance values are used, excessive ripple voltage or a drop in efficiency may result.

8. If other than the recommended inductance and capacitance values are used, a drop in output voltage when the load is excessive may cause the short-circuit protection function to activate. Before use, test fully using the actual device.

9. At high temperature, excessive ripple voltage may occur and cause a drop in output voltage and efficiency. Before using at high temperature, test fully using the actual device

10. At light loads or when IC operation is stopped, leakage current from the Pch driver Tr may cause the output voltage to rise.

11. The average output voltage may vary due to the effects of output voltage ripple caused by the load current. Before use, test fully using the actual device.

12. If the C_L capacitance or load current is large, the output voltage rise time will lengthen when the IC is started, and coil current overlay may occur during the interval until the output voltage reaches the set voltage (refer to the diagram below).

XCL210A Series、V_{IN}=V_{CE}=0→6.0V、V_{OUT}=1.0V、I_{OUT}=200mA、CL=22uF、Ta=25℃

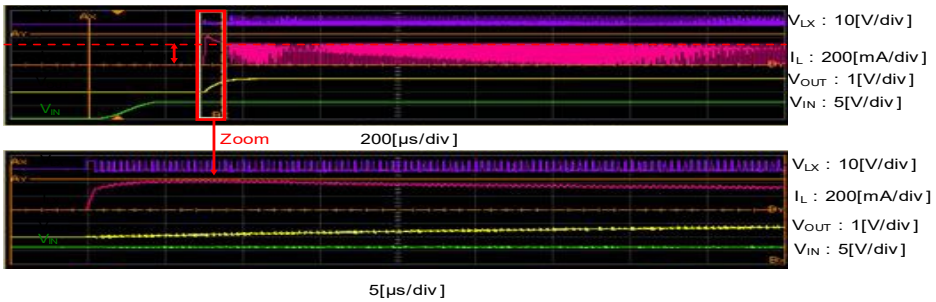

13. When the IC is started, the short-circuit protection function does not operate during the interval until the V_{OUT} voltage reaches a value near the set voltage.

14. If the IC is started at a V_{IN} voltage that activates through mode, it is possible that the short-circuit protection function will not operate. Before use, test fully using the actual device.

15. If the load current is excessively large when the IC is started, it is possible that the V_{OUT} voltage will not rise to the set voltage. Before use, test fully using the actual device.

Downloaded from Arrow.com.

■NOTE ON USE (Continued)

16. In actual operation, the maximum on-time depends on the peripheral components, input voltage, and load current. Before use, test fully using the actual device.

17. When the V_{IN} voltage is turned on and off continuously, excessive rush current may occur while the voltage is on. Before use, test fully using the actual device.

18. When the V_{IN} voltage is high, the Pch driver may change from on to off before the coil current reaches the PFM switching current (I_{PFM}), or before the maximum on-time elapses. Before use, test fully using the actual device.

19. When the IC change to the Through Mode at light load, the supply current of this IC can increase in some cases.

20. For temporary, transitional voltage drop or voltage rising phenomenon, the IC is liable to malfunction should the ratings be exceeded.

21. Torex places an importance on improving our products and their reliability.
We request that users incorporate fail-safe designs and post-aging protection treatment when using Torex products in their systems.

22. The UVLO function can be activated when the UVLO hysteresis width gets to about 0mV and after several tens ms elapses at light loads.
Before use, test fully using the actual device.

23. Please use within the power dissipation range below. Please also note that the power dissipation may change by test conditions, the power dissipation figure shown is PCB mounted.

24. The proper position of mounting is based on the coil terminal

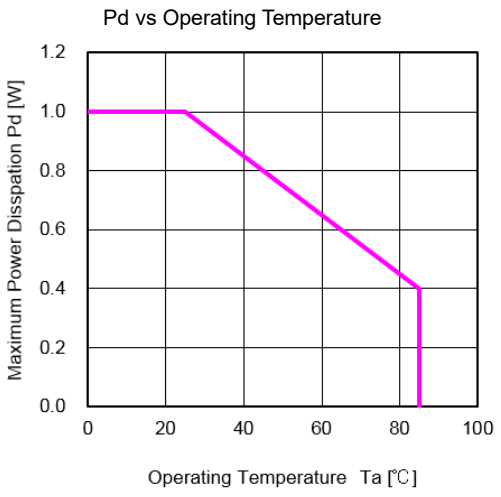

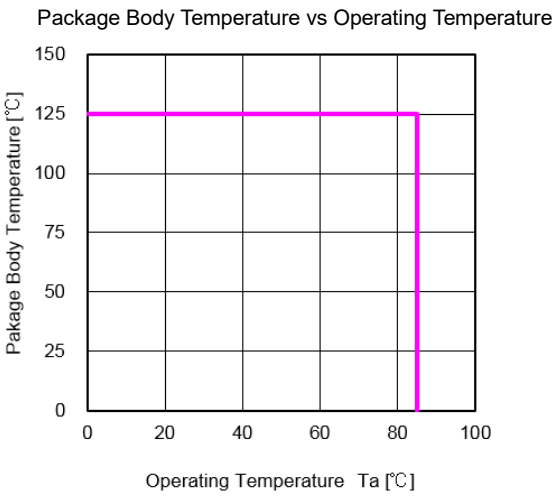

the power loss of micro DC/DC according to the following formula:

power loss = $V_{OUT} \times I_{OUT} \times ((100/EFFI) - 1)$ *(W)*

V_{OUT} : Output Voltage (V)
I_{OUT} : Output Current (A)
EFFI : Conversion Efficiency (%)

Downloaded from Arrow.com.

■NOTE ON USE (Continued)

●Instructions of pattern layouts

1. To suppress fluctuations in the V_{IN} potential, connect a bypass capacitor (C_{IN}) in the shortest path between the V_{IN} pin and ground pin.

2. Please mount each external component as close to the IC as possible.

3. Wire external components as close to the IC as possible and use thick, short connecting traces to reduce the circuit impedance.

4. Make sure that the ground traces are as thick as possible, as variations in ground potential caused by high ground currents at the time of switching may result in instability of the IC.

5. Internal driver transistors bring on heat because of the transistor current and ON resistance of the driver transistors.

6. As precautions on mounting, please set the mounting position accuracy within 0.05 mm

●Recommended Pattern Layout

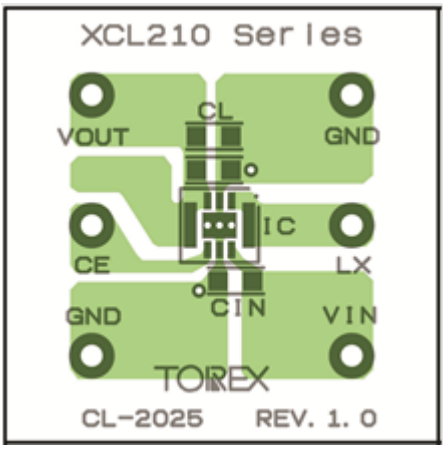

Top view

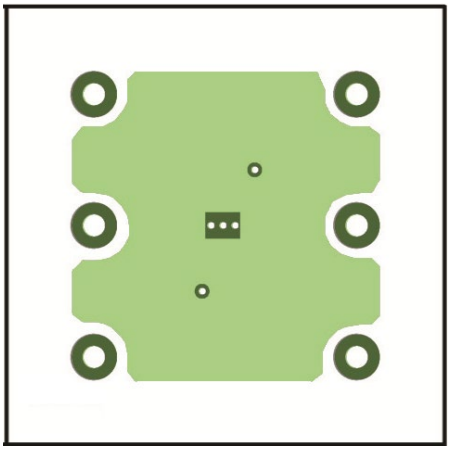

Back side top view

Downloaded from Arrow.com.

■TYPICAL PERFORMANCE CHARACTERISTICS

1) Output Voltage vs. Output Current

XCL210A121GR-G/XCL210C121GR-G

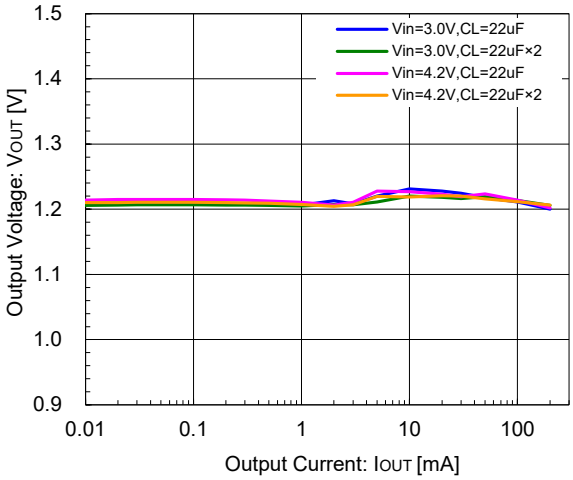

XCL210B121GR-G/XCL210D121GR-G

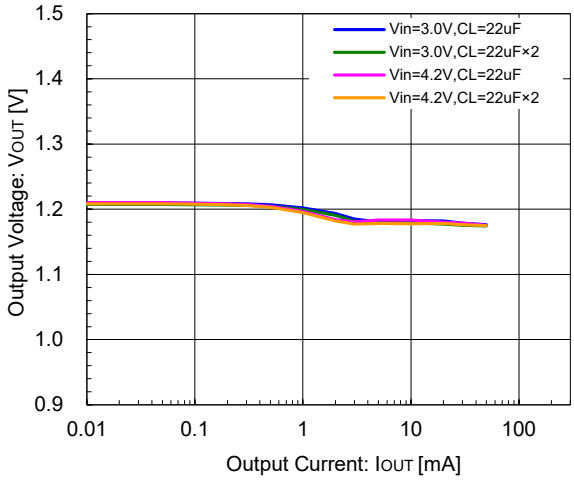

XCL210A181GR-G/XCL210C181GR-G

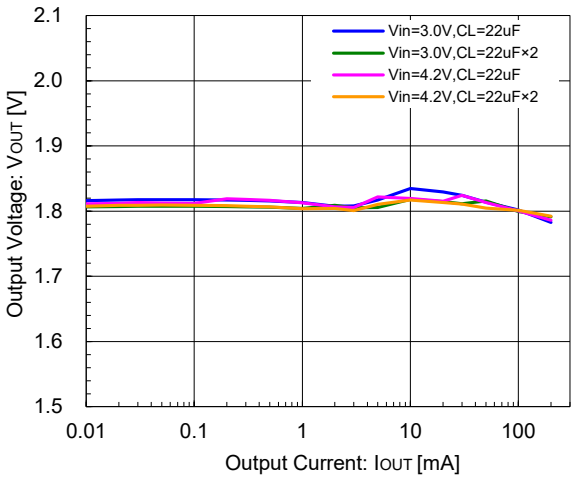

XCL210B181GR-G/XCL210D181GR-G

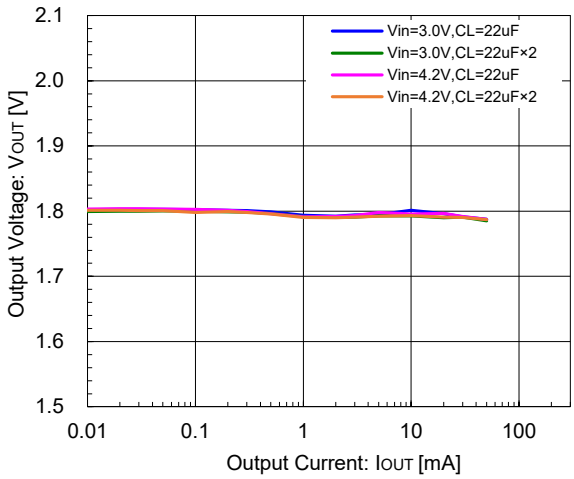

XCL210A331GR-G/XCL210C331GR-G

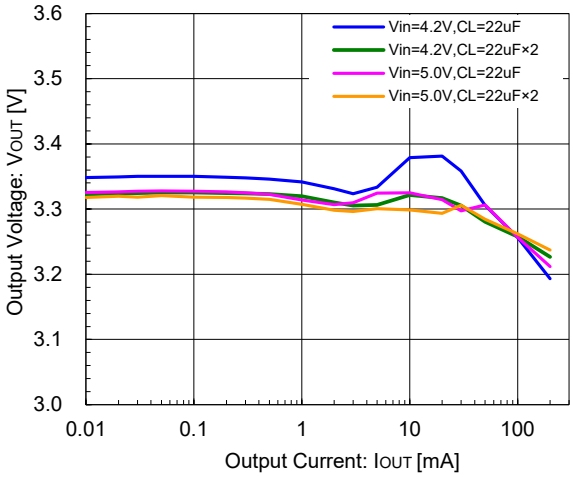

XCL210B331GR-G/XCL210D331GR-G

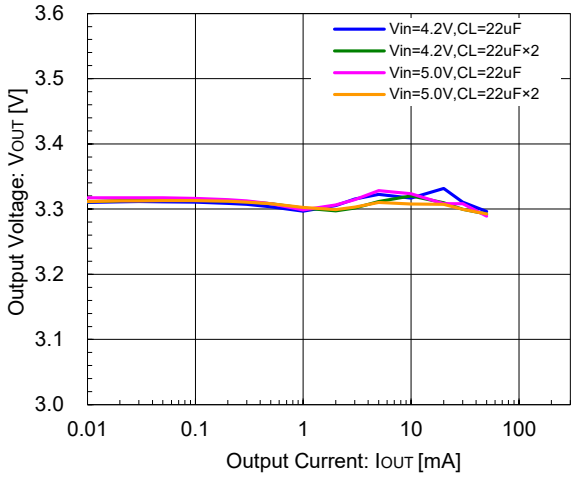

Downloaded from Arrow.com.

■TYPICAL PERFORMANCE CHARACTERISTICS (Continued)

2) Efficiency vs. Output Current

XCL210A121GR-G/XCL210C121GR-G

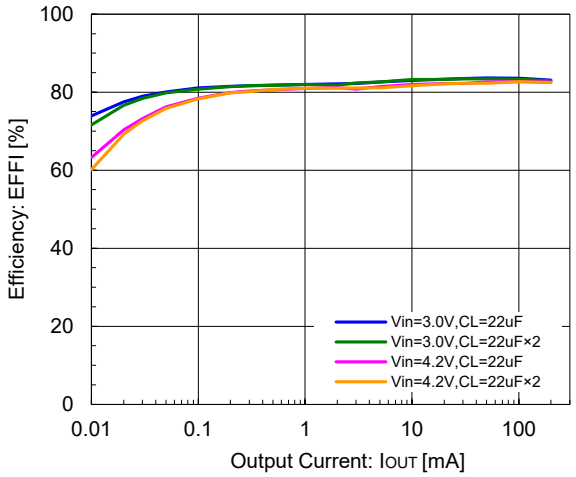

XCL210B121GR-G/XCL210D121GR-G

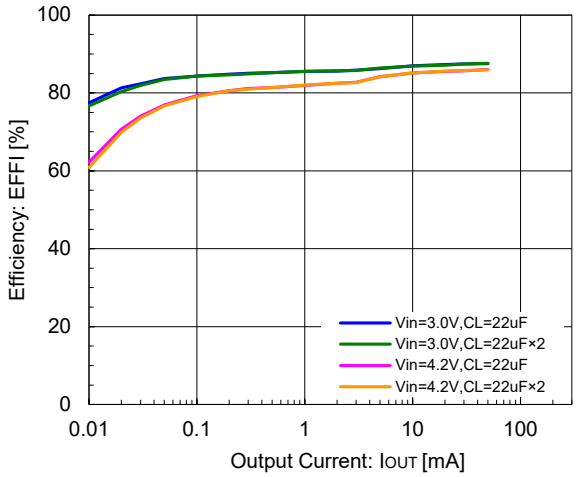

XCL210A181GR-G/XCL210C181GR-G

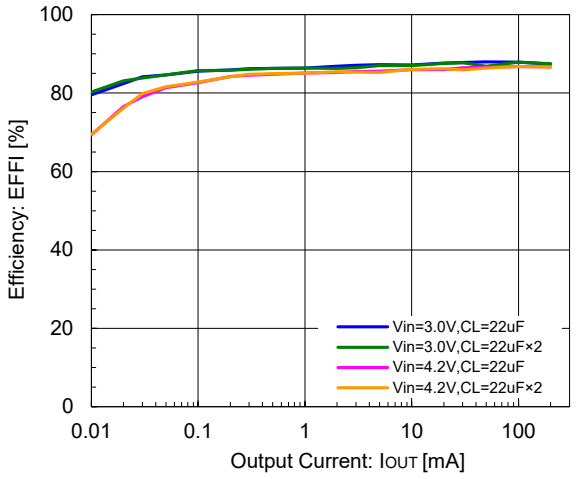

XCL210B181GR-G/XCL210D181GR-G

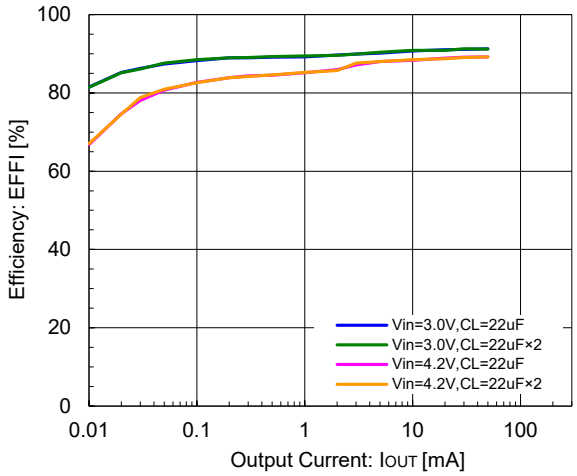

XCL210A331GR-G/XCL210C331GR-G

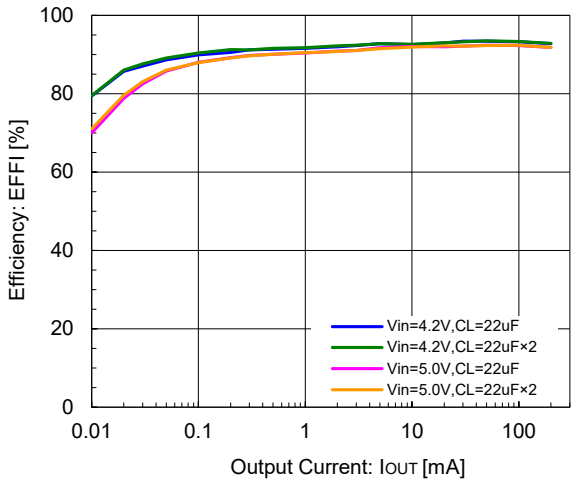

XCL210B331GR-G/XCL210D331GR-G

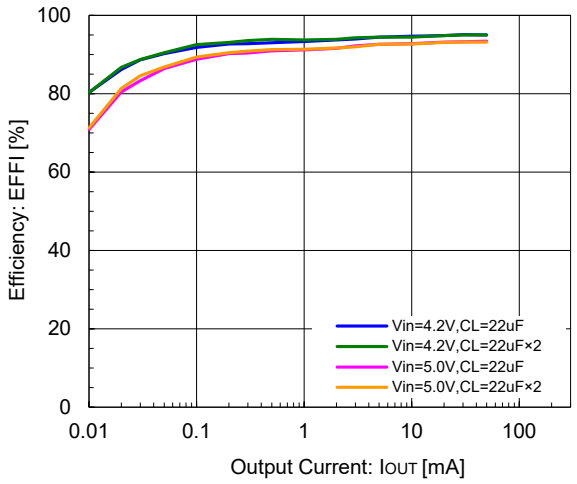

Downloaded from Arrow.com.

■TYPICAL PERFORMANCE CHARACTERISTICS (Continued)

3) Ripple Voltage vs. Output Current

XCL210A121GR-G/XCL210C121GR-G

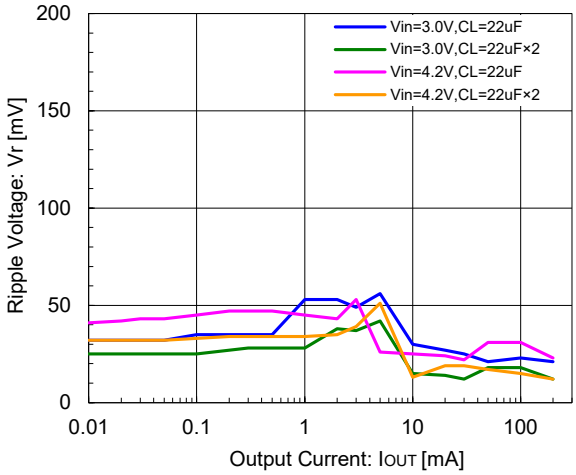

XCL210B121GR-G/XCL210D121GR-G

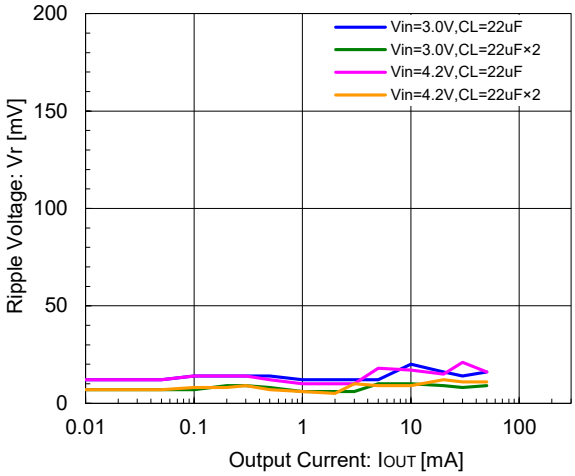

XCL210A181GR-G/XCL210C181GR-G

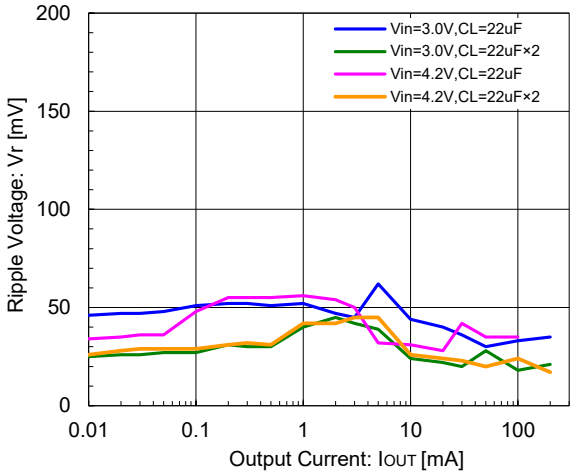

XCL210B181GR-G/XCL210D181GR-G

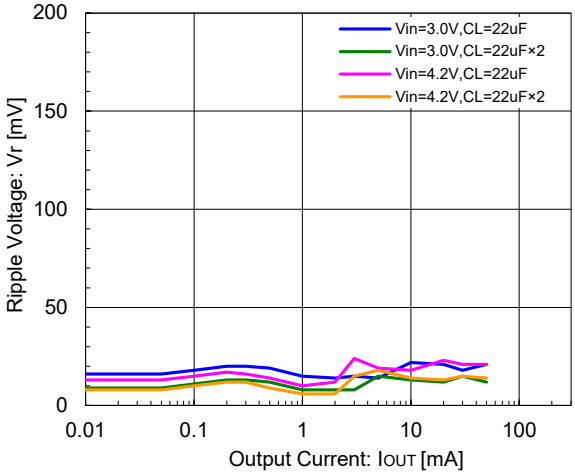

XCL210A331GR-G/XCL210C331GR-G

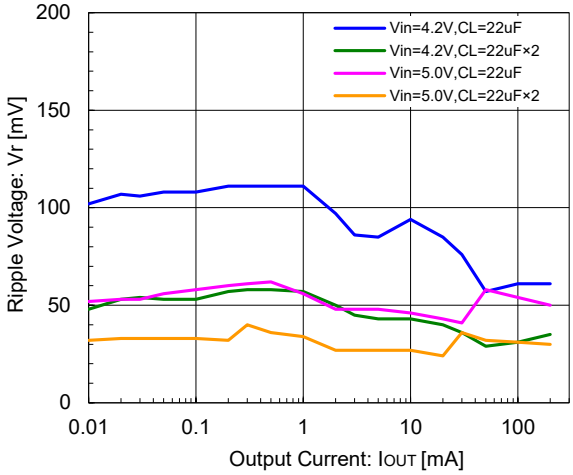

XCL210B331GR-G/XCL210D331GR-G

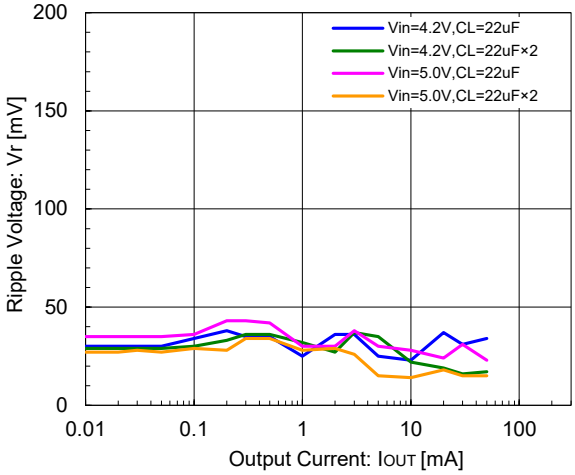

Downloaded from Arrow.com.

■TYPICAL PERFORMANCE CHARACTERISTICS (Continued)

4) Ambient Temperature vs. Output Voltage

XCL210A121GR-G/XCL210C121GR-G

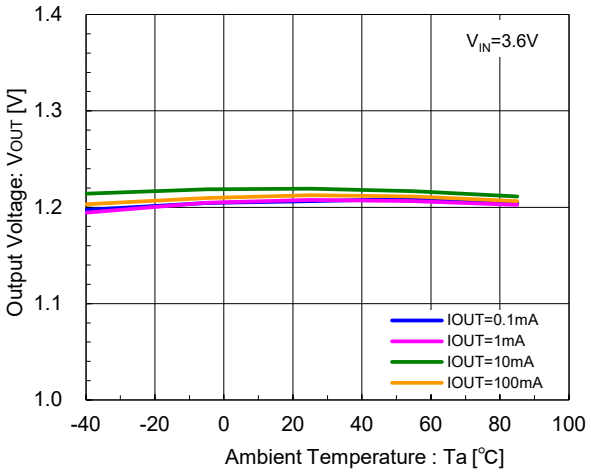

XCL210B121GR-G/XCL210D121GR-G

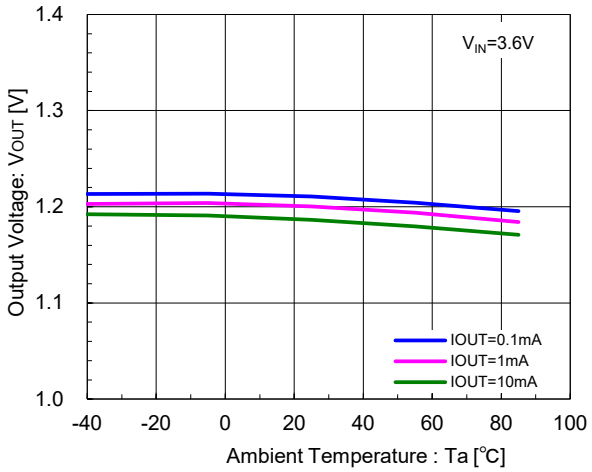

XCL210A181GR-G/XCL210C181GR-G

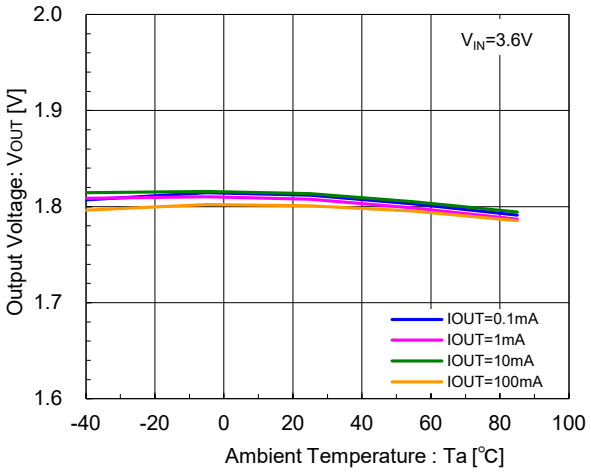

XCL210B181GR-G/XCL210D181GR-G

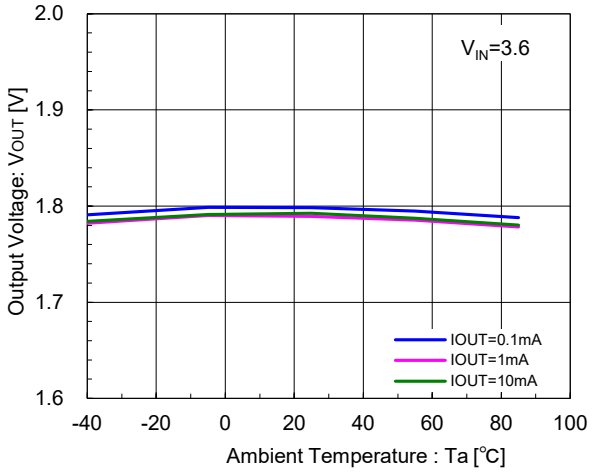

XCL210A331GR-G/XCL210C331GR-G

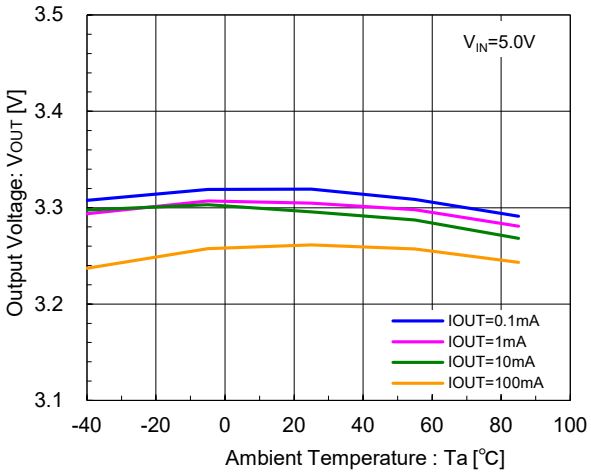

XCL210B331GR-G/XCL210D331GR-G

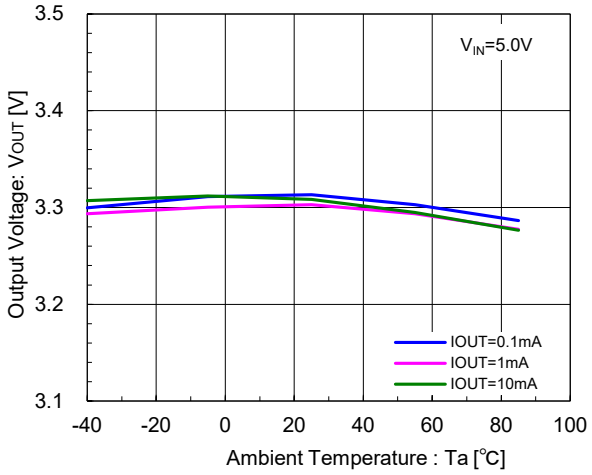

Downloaded from Arrow.com.

■TYPICAL PERFORMANCE CHARACTERISTICS (Continued)

5) Load Transient Response

(1)XCL210B181GR-G, V_{IN}=3.6V, V_{OUT}=1.8V / I_{OUT}=0.1mA ⇔30mA

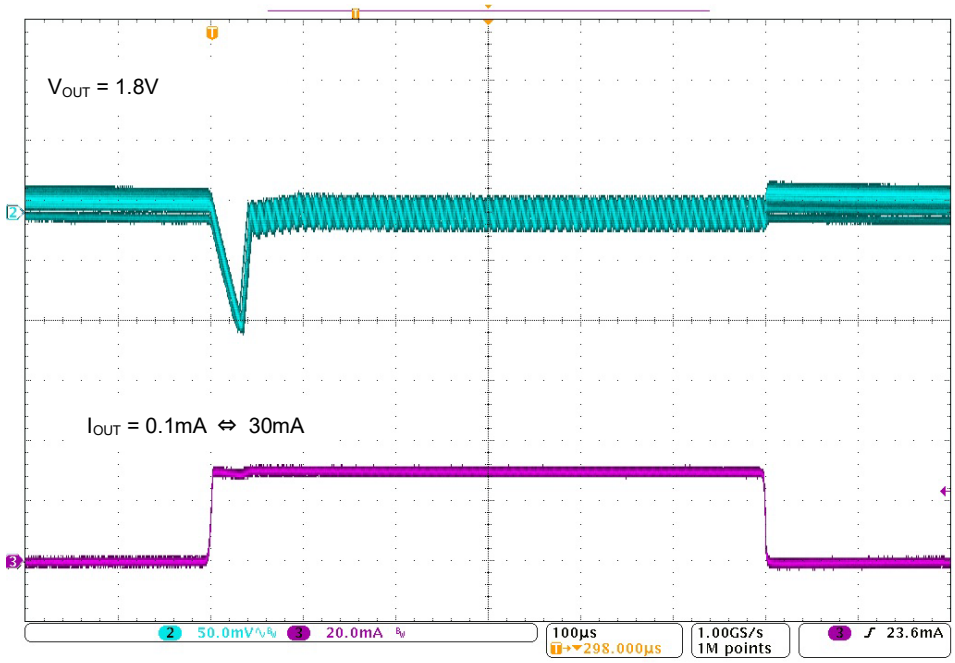

(2)XCL210B181GR-G, V_{IN}=3.6V, V_{OUT}=1.8V / I_{OUT}=10mA ⇔30mA

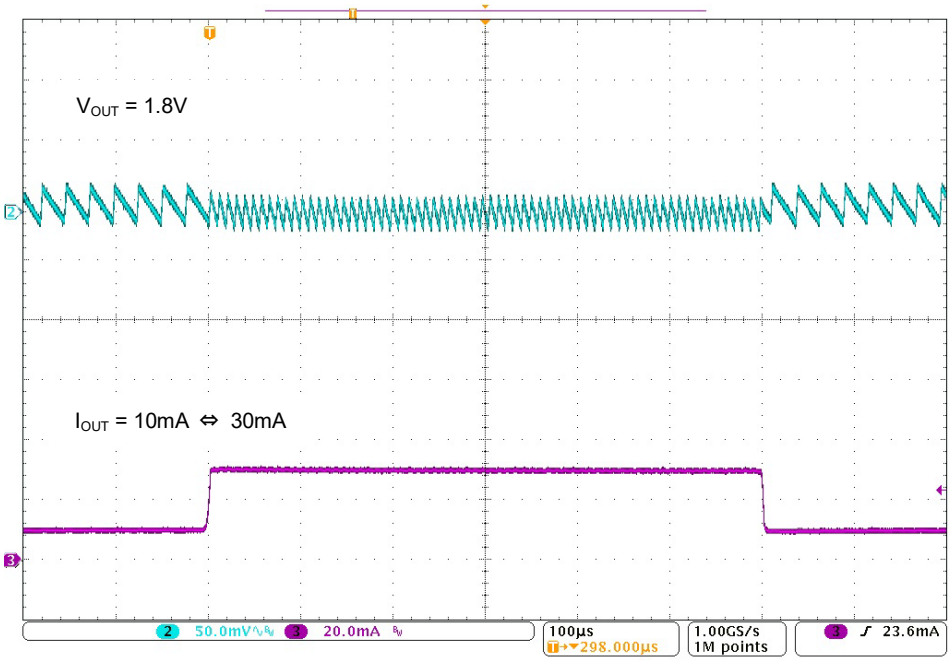

Downloaded from Arrow.com.

■PACKAGING INFORMATION

For the latest package information go to, www.torexsemi.com/technical-support/packages

PACKAGE	OUTLINE / LAND PATTERN	THERMAL CHARACTERISTICS
CL-2025-02	CL-2025-02 PKG	CL-2025-02 Power Dissipation

Downloaded from Arrow.com.

■MARKING RULE

●CL-2025-02

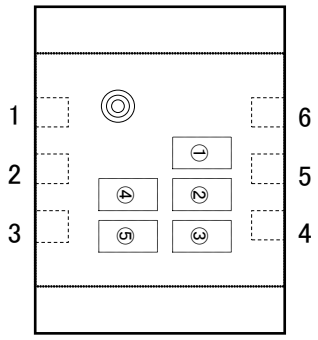

① represents products series

MARK	PRODUCT SERIES
0	XCL210******-G

② represents integer of the output voltage

MARK	TYPE	OUTPUT VOLTAGE(V)	PRODUCT SERIES
8	A	1.x	XCL210A1****-G
9		2.x	XCL210A2****-G
E		3.x	XCL210A3****-G
F		4.x	XCL210A4****-G
H	B	1.x	XCL210B1****-G
K		2.x	XCL210B2****-G
L		3.x	XCL210B3****-G
M		4.x	XCL210B4****-G
N	C	1.x	XCL210C1****-G
P		2.x	XCL210C2****-G
R		3.x	XCL210C3****-G
S		4.x	XCL210C4****-G
T	D	1.x	XCL210D1****-G
U		2.x	XCL210D2****-G
V		3.x	XCL210D3****-G
X		4.x	XCL210D4****-G

③ represents the decimal part of output voltage

OUTPUT VOLTAGE(V)	MARK	PRODUCT SERIES
X.0	0	XCL210**0***-G
X.05	A	XCL210**A***-G
X.1	1	XCL210**1***-G
X.15	B	XCL210**B***-G
X.2	2	XCL210**2***-G
X.25	C	XCL210**C***-G
X.3	3	XCL210**3***-G
X.35	D	XCL210**D***-G
X.4	4	XCL210**4***-G
X.45	E	XCL210**E***-G
X.5	5	XCL210**5***-G
X.55	F	XCL210**F***-G
X.6	6	XCL210**6***-G
X.65	H	XCL210**H***-G
X.7	7	XCL210**7***-G
X.75	K	XCL210**K***-G
X.8	8	XCL210**8***-G
X.85	L	XCL210**L***-G
X.9	9	XCL210**9***-G
X.95	M	XCL210**M***-G

④,⑤ represents production lot number

01～09、0A～0Z、11～9Z、A1～A9、AA～AZ、B1～ZZ in order.

(G, I, J, O, Q, W excluded)

Note: No character inversion used.

Downloaded from Arrow.com.

1. The product and product specifications contained herein are subject to change without notice to improve performance characteristics. Consult us, or our representatives before use, to confirm that the information in this datasheet is up to date.

2. The information in this datasheet is intended to illustrate the operation and characteristics of our products. We neither make warranties or representations with respect to the accuracy or completeness of the information contained in this datasheet nor grant any license to any intellectual property rights of ours or any third party concerning with the information in this datasheet.

3. Applicable export control laws and regulations should be complied and the procedures required by such laws and regulations should also be followed, when the product or any information contained in this datasheet is exported.

4. The product is neither intended nor warranted for use in equipment of systems which require extremely high levels of quality and/or reliability and/or a malfunction or failure which may cause loss of human life, bodily injury, serious property damage including but not limited to devices or equipment used in 1) nuclear facilities, 2) aerospace industry, 3) medical facilities, 4) automobile industry and other transportation industry and 5) safety devices and safety equipment to control combustions and explosions. Do not use the product for the above use unless agreed by us in writing in advance.

5. Although we make continuous efforts to improve the quality and reliability of our products; nevertheless Semiconductors are likely to fail with a certain probability. So in order to prevent personal injury and/or property damage resulting from such failure, customers are required to incorporate adequate safety measures in their designs, such as system fail safes, redundancy and fire prevention features.

6. Our products are not designed to be Radiation-resistant.

7. Please use the product listed in this datasheet within the specified ranges.

8. We assume no responsibility for damage or loss due to abnormal use.

9. All rights reserved. No part of this datasheet may be copied or reproduced unless agreed by Torex Semiconductor Ltd in writing in advance.

TOREX SEMICONDUCTOR LTD.

Downloaded from Arrow.com.