© – TE Connectivity. All Rights Reserved.

REVISIONS					
P	LTR	DESCRIPTION	DATE	DWN	APVD
	B	REVISED PER ECO-21-008021	30AUG2021	RZ	HL
	A2	REVISED PER ECO-16-008068	06FEB16	BJ	SY

NOTES:

1. HOUSING: GLASS FILLED THERMOPLASTIC UL 94 V-0 RATED; GREY
2. CONTACTS: COPPER ALLOY
3. PLATING:
   CONTACT AREA: PERFORMANCE LEVEL 1 OR 2 (SEE TABLE) ACCORDING TO DIN 41612 AND EN 60603-2, TYPE G
   SOLDERING AREA: 3-7µm TIN OVER 0,8µm NICKEL
4. CONNECTOR IS PRINTED WITH PARTNUMBER AND DATECODE
5. PART IDENTICAL TO 5-9

	P/N	PERF.LVL	CONTACT ASSIGNMENT	POS
OBSOLETE 5	~~4-2~~ 5-9 6-0	1 2 2	1 2 3 4 5 6 7 8 9 0 1 2 3 4 5 6 7 8 9 0 1 2 3 4 5 6 7 8 9 0 1 2 z + + + + + + + + + + + + + + + + b + + + + + + + + + + + + + + + + d + + + + + + + + + + + + + + + + f + + + + + + + + + + + + + + + +	64
OBSOLETE	~~4-4~~ 6-1	1 2	1 2 3 4 5 6 7 8 9 0 1 2 3 4 5 6 7 8 9 0 1 2 3 4 5 6 7 8 9 0 1 2 z v + + + + + + + + + + + + + + + b v + + + + + + + + + + + + + + v d + + + + + + + + + + + + + + + + f + + + + + + + + + + + + + + + +	64

+ CONTACT
v PREMATING CONTACT 1,3mm

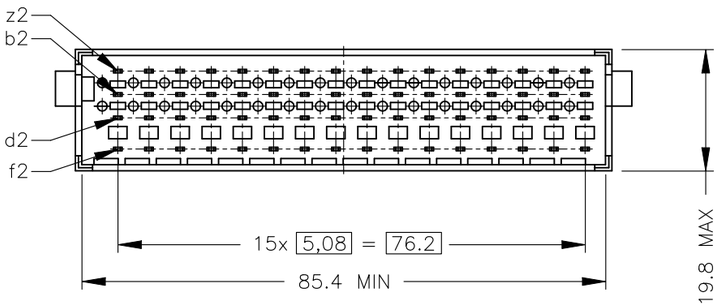

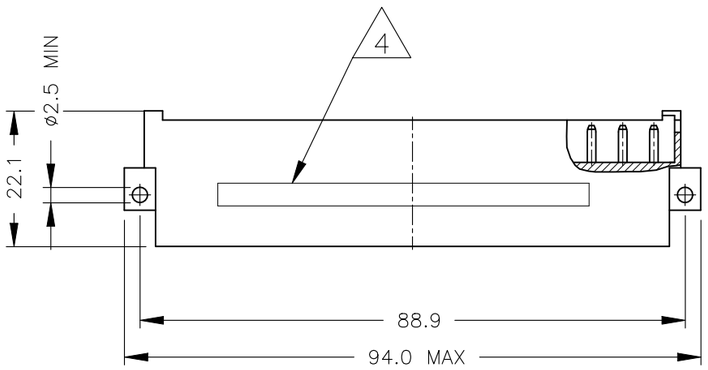

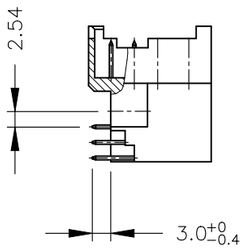

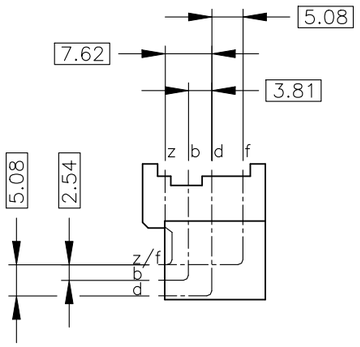

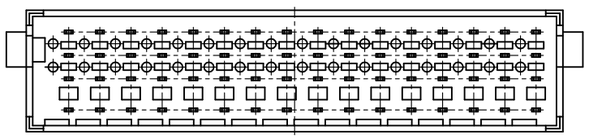

THIS DRAWING IS A CONTROLLED DOCUMENT.

DIMENSIONS: mm

TOLERANCES UNLESS OTHERWISE SPECIFIED:
0 PLC ± –
1 PLC ± –
2 PLC ± –
3 PLC ± –
4 PLC ± –
ANGLES ± –

MATERIAL –

FINISH –

DWN J.van Hoek 05OCT2007
CHK B.Mooij 16OCT2007
APVD J.Broeksteeg 16OCT2005
PRODUCT SPEC –
APPLICATION SPEC –
WEIGHT 0.000000

TE Connectivity

NAME EUROCARD MALE CONNECTOR TYPE G 64 POS. ANGLED –

SIZE A3 | CAGE CODE 00779 | DRAWING NO C-4-1393755-2 | RESTRICTED TO –

CUSTOMER DRAWING | SCALE 1:1 | SHEET 1 OF 1 | REV B

Downloaded from Arrow.com.