Connector Location A

Connector Location B

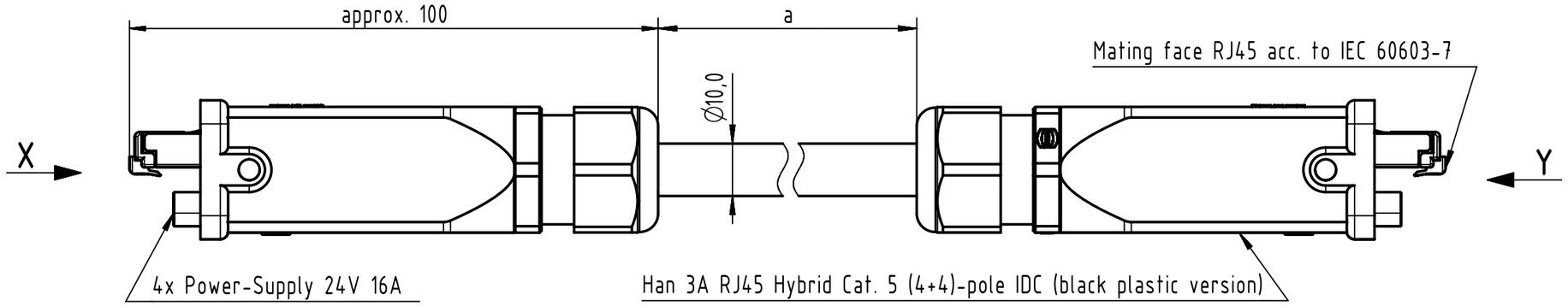

Cont. no	Part no.	Type of cable	Dim. a [m]
25	09457251361	RJI Ethernet Hybrid Cable, 4xAWG 22/7 + 4x1.5sqmm (shielded), FRNC, Cat. 5, green	100
24	09457251360		90
23	09457251359		80
22	09457251358		70
21	09457251357		60
20	09457251356		50
19	09457251355		40
18	09457251354		30
17	09457251332		25
16	09457251353		20
15	09457251352		15
14	09457251333		12
13	09457251351		10
12	09457251331		9
11	09457251330		8
10	09457251329		7
9	09457251328		6
8	09457251327		5
7	09457251326		4
6	09457251325		3
5	09457251324		2
4	09457251323		1.5
3	09457251322		1
2	09457251362		0.8
1	09457251321		0.5

X
male

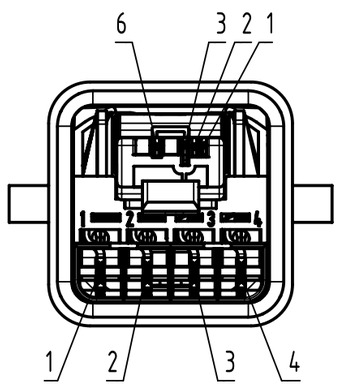

Loading Plan

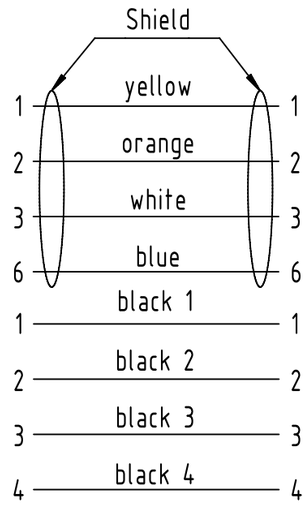

Y
male

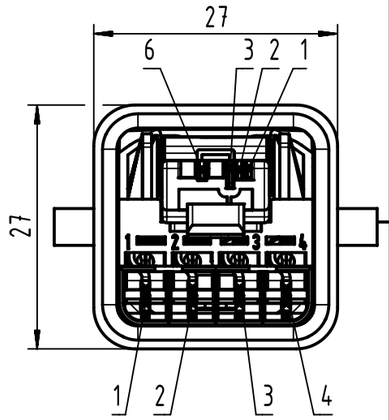

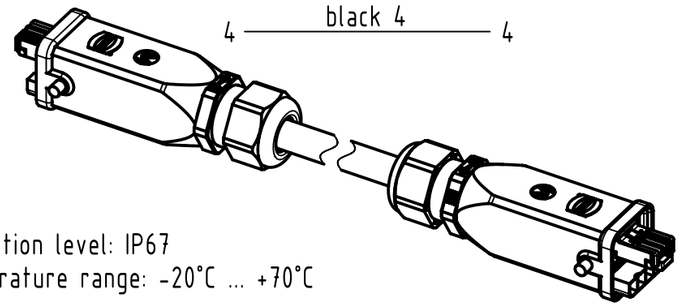

- Protection level: IP67
- Temperature range: -20°C ... +70°C

All Dimensions in mm	Tech. Character.	Free size tol.		According to production drawing

HARTING	All rights reserved	Created by BANCIUD Banciu	Inspected by 402676 Gross	Standardisation MUNTEANV Muntean	Date 2021-07-08	State Final Release
	Department HCS - RO	Title Han 3A RJ45 Hybrid Cable Assembly				Doc-Key / ECM-Nr. 100155668/UGD/008/D 500000198811
HARTING Customised Solutions D-32339 Espelkamp		Type TB	Number 09457251 3XX		Rev. D	Page 1/1

Downloaded from Arrow.com.

A3