Operational Amplifiers

Ground Sense Operational Amplifiers

LM358xxx LM324xxx LM2904xxx LM2902xxx

General Description

LM358xxx and LM2904xxx series are dual ground sense operational amplifiers. LM324xxx and LM2902xxx series are quad. These have features of low current consumption and wide operating voltage range from 3V to 32V (single power supply).

Features

- Operable with a Single Power Supply
- Wide Operating Supply Voltage Range
- Input/output Ground Sense
- High Large Signal Voltage Gain

Applications

- Current Sense Application
- Buffer Application Amplifier
- Active Filter
- Consumer Electronics

Key Specifications

- Operating Supply Voltage (Single Supply): 3.0V to 32.0V
- Operating Temperature Range:
  - LM358xxx: -40°C to +85°C
  - LM324xxx: -40°C to +85°C
  - LM2904xxx: -40°C to +125°C
  - LM2902xxx: -40°C to +125°C
- Input Offset Voltage: 4.5mV (Max)
- Input Bias Current: 20nA (Typ)

Packages

	W(Typ) x D(Typ) x H(Max)
SOP8	5.00mm x 6.20mm x 1.71mm
SOP-J8	4.90mm x 6.00mm x 1.65mm
SSOP-B8	3.00mm x 6.40mm x 1.35mm
TSSOP-B8	3.00mm x 6.40mm x 1.20mm
TSSOP-B8J	3.00mm x 4.90mm x 1.10mm
MSOP8	2.90mm x 4.00mm x 0.90mm
SOP14	8.70mm x 6.20mm x 1.71mm
SOP-J14	8.65mm x 6.00mm x 1.65mm
SSOP-B14	5.00mm x 6.40mm x 1.35mm
TSSOP-B14J	5.00mm x 6.40mm x 1.20mm

Pin Configuration

LM358F, LM2904F : SOP8
LM358FJ, LM2904FJ : SOP-J8
LM358FV, LM2904FV : SSOP-B8
LM358FVT, LM2904FVT : TSSOP-B8
LM358FVJ, LM2904FVJ : TSSOP-B8J
LM358FVM, LM2904FVM : MSOP8

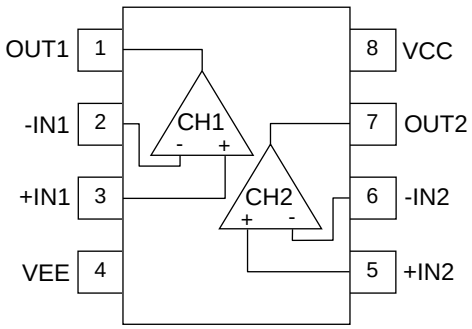

Pin No.	Pin Name
1	OUT1
2	-IN1
3	+IN1
4	VEE
5	+IN2
6	-IN2
7	OUT2
8	VCC

○Product structure : Silicon monolithic integrated circuit ○This product has no designed protection against radioactive rays.

©2015 ROHM Co., Ltd. All rights reserved.

Downloaded from Arrow.com.

LM324F, LM2902F : SOP14
LM324FJ, LM2902FJ : SOP-J14
LM324FV, LM2902FV : SSOP-B14
LM324FVJ, LM2902FVJ : TSSOP-B14J

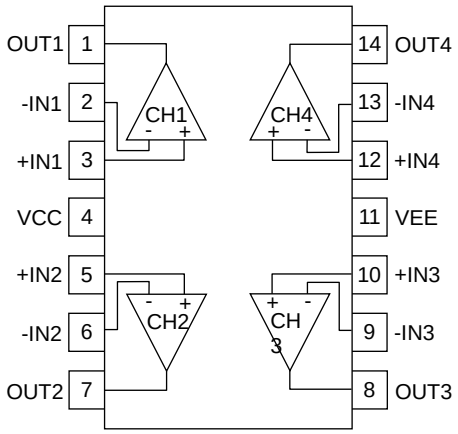

Pin No.	Pin Name
1	OUT1
2	-IN1
3	+IN1
4	VCC
5	+IN2
6	-IN2
7	OUT2
8	OUT3
9	-IN3
10	+IN3
11	VEE
12	+IN4
13	-IN4
14	OUT4

Absolute Maximum Ratings (T_A=25°C)

Parameter	Symbol		Rating				Unit
			LM358xxx	LM324xxx	LM2904xxx	LM2902xxx	
Supply Voltage	V_{CC}-V_{EE}		36				V
Power Dissipation	P_D	SOP8	0.68(Note 1,9)	-	0.68(Note 1,9)	-	W
		SOP-J8	0.67(Note 2,9)	-	0.67(Note 2,9)	-	
		SSOP-B8	0.62(Note 3,9)	-	0.62(Note 3,9)	-	
		TSSOP-B8	0.62(Note 3,9)	-	0.62(Note 3,9)	-	
		TSSOP-B8J	0.58(Note 4,9)	-	0.58(Note 4,9)	-	
		MSOP8	0.58(Note 4,9)	-	0.58(Note 4,9)	-	
		SOP14	-	0.56(Note 5,9)	-	0.56(Note 5,9)	
		SOP-J14	-	1.02(Note 6,9)	-	1.02 (Note 6,9)	
		SSOP-B14	-	0.87(Note 7,9)	-	0.87(Note 7,9)	
		TSSOP-B14J	-	0.85(Note 8,9)	-	0.85(Note 8,9)	
Differential Input Voltage (Note 10)	V_{ID}		36				V
Input Common-mode Voltage Range	V_{ICM}		(V_{EE}-0.3) to (V_{EE}+36)				V
Input Current(Note 11)	I_I		±10				mA
Operating Supply Voltage	V_{opr}		3.0 to 32.0				V
Operating Temperature Range	T_{opr}		-40 to +85		-40 to +125		°C
Storage Temperature Range	T_{stg}		-55 to +150				°C
Maximum Junction Temperature	T_{jmax}		150				°C

(Note 1) Reduce by 5.5mW per 1°C above 25°C.
(Note 2) Reduce by 5.4mW per 1°C above 25°C.
(Note 3) Reduce by 5.0mW per 1°C above 25°C.
(Note 4) Reduce by 4.7mW per 1°C above 25°C.
(Note 5) Reduce by 4.5mW per 1°C above 25°C.
(Note 6) Reduce by 8.2mW per 1°C above 25°C.
(Note 7) Reduce by 7.0mW per 1°C above 25°C.
(Note 8) Reduce by 6.8mW per 1°C above 25°C.
(Note 9) Mounted on an FR4 glass epoxy PCB 70mm×70mm×1.6mm (Copper foil area less than 3%).
(Note 10) Differential Input Voltage is the voltage difference between the inverting and non-inverting inputs.
The input pin voltage is set to more than V_{EE}.
(Note 11) An excessive input current will flow when input voltages of less than V_{EE}-0.6V are applied.
The input current can be set to less than the rated current by adding a limiting resistor.

Caution: Operating the IC over the absolute maximum ratings may damage the IC. The damage can either be a short circuit between pins or an open circuit between pins and the internal circuitry. Therefore, it is important to consider circuit protection measures, such as adding a fuse, in case the IC is operated over the absolute maximum ratings.

©2015 ROHM Co., Ltd. All rights reserved.

Downloaded from Arrow.com.

Electrical Characteristics

○LM358xxx, LM2904xxx (Unless otherwise specified V_{CC}=+5V, V_{EE}=0V)

Parameter	Symbol	Temperature Range	Limits			Unit	Condition
			Min	Typ	Max		
Input Offset Voltage(Note 12,13)	V_{IO}	25°C	-	1	4.5	mV	V_{OUT}=1.4V
		Full Range	-	-	5		V_{CC}=5 to 30V, V_{OUT}=1.4V
Input Offset Voltage Drift(Note 12)	$\Delta V_{IO}/\Delta T$	-	-	6	-	μV/°C	V_{OUT}=1.4V
Input Offset Current(Note 12,13)	I_{IO}	25°C	-	2	50	nA	V_{OUT}=1.4V
		Full Range	-	-	200		
Input Bias Current(Note 12,13)	I_B	25°C	-	20	250	nA	V_{OUT}=1.4V
		Full Range	-	-	300		
Supply Current(Note 13)	I_{CC}	25°C	-	0.6	1.2	mA	R_L=∞, All Op-Amps
		Full Range	-	-	1.5		
Maximum Output Voltage (High)(Note 13)	V_{OH}	25°C	3.5	-	-	V	R_L=2kΩ
		Full Range	27	28	-		V_{CC}=30V, R_L=10kΩ
Maximum Output Voltage (Low)(Note 13)	V_{OL}	Full Range	-	5	20	mV	R_L=∞
Large Signal Voltage Gain	A_V	25°C	25	100	-	V/mV	R_L≧2kΩ, V_{CC}=15V V_{OUT}=1.4 to 11.4V
			88	100	-	dB	
Input Common-mode Voltage Range	V_{ICM}	25°C	0	-	3.5	V	V_{ICM}=V_{EE} to (V_{CC}-1.5V) V_{OUT}=1.4V
Input Common-mode Voltage Range (VEE side) (Note 14)	V_{ICM}	Full Range	-	0.1	-	V	V_{OUT}=1.4V
Common-mode Rejection Ratio	CMRR	25°C	70	80	-	dB	V_{OUT}=1.4V
Power Supply Rejection Ratio	PSRR	25°C	65	100	-	dB	V_{CC}=5 to 30V
Output Source Current(Note 13,15)	I_{SOURCE}	25°C	20	30	-	mA	V_{+IN}=1V, V_{-IN}=0V V_{OUT}=0V, Short Current
		Full Range	10	-	-		
Output Sink Current(Note 13,15)	I_{SINK}	25°C	20	27	-	mA	V_{+IN}=0V, V_{-IN}=1V V_{OUT}=5V, Short Current
		Full Range	5	-	-		
		25°C	20	50	-	μA	V_{+IN}=0V, V_{-IN}=1V V_{OUT}=200mV
Channel Separation	CS	25°C	-	120	-	dB	f=1kHz, Input Referred
Slew Rate	SR	25°C	-	0.3	-	V/μs	V_{CC}=15V, Av=0dB R_L=2kΩ, C_L=100pF
Gain Bandwidth	GBW	25°C	-	0.8	-	MHz	V_{CC}=15V, V_{EE}=-15V R_L=2kΩ, C_L=100pF
Phase Margin	θ	25°C	-	80	-	deg	Av=40dB
Input Referred Noise Voltage	V_N	25°C	-	40	-	nV/√Hz	V_{CC}=15V, V_{EE}=-15V R_S=100Ω, V_{IN}=0V, f=1kHz

(Note 12) Absolute value
(Note 13) LM358xxx Full Range: T_A=-40°C to +85°C, LM2904xxx Full Range: T_A=-40°C to +125°C
(Note 14) LM2904xxx only.
(Note 15) Consider the power dissipation of the IC under high temperature when selecting the output current value.
There may be a case where the output current value is reduced due to the rise in IC temperature caused by the heat generated inside the IC.

©2015 ROHM Co., Ltd. All rights reserved.

Downloaded from Arrow.com.

Electrical Characteristics - continued

○LM324xxx, LM2902xxx (Unless otherwise specified V_{CC}=+5V, V_{EE}=0V)

Parameter	Symbol	Temperature Range	Limits			Unit	Condition
			Min	Typ	Max		
Input Offset Voltage(Note 16,17)	V_{IO}	25°C	-	1	4.5	mV	V_{OUT}=1.4V
		Full Range	-	-	5		V_{CC}=5 to 30V, V_{OUT}=1.4V
Input Offset Voltage Drift(Note 17)	$\Delta V_{IO}/\Delta T$	-	-	6	-	μV/°C	V_{OUT}=1.4V
Input Offset Current(Note 16,17)	I_{IO}	25°C	-	2	50	nA	V_{OUT}=1.4V
		Full Range	-	-	200		
Input Bias Current(Note 16,17)	I_B	25°C	-	20	250	nA	V_{OUT}=1.4V
		Full Range	-	-	300		
Supply Current(Note 17)	I_{CC}	25°C	-	1	2	mA	R_L=∞, All Op-Amps
		Full Range	-	-	2.5		
Maximum Output Voltage (High)(Note 17)	V_{OH}	25°C	3.5	-	-	V	R_L=2kΩ
		Full Range	27	28	-		V_{CC}=30V, R_L=10kΩ
Maximum Output Voltage (Low)(Note 17)	V_{OL}	Full Range	-	5	20	mV	R_L=∞
Large Signal Voltage Gain	A_V	25°C	25	100	-	V/mV	R_L≧2kΩ, V_{CC}=15V V_{OUT}=1.4 to 11.4V
			88	100	-	dB	
Input Common-mode Voltage Range	V_{ICM}	25°C	0	-	3.5	V	V_{ICM}=V_{EE} to (V_{CC}-1.5V) V_{OUT}=1.4V
Input Common-mode Voltage Range (VEE side) (Note 18)	V_{ICM}	Full Range	-	0.1	-	V	V_{OUT}=1.4V
Common-mode Rejection Ratio	CMRR	25°C	70	80	-	dB	V_{OUT}=1.4V
Power Supply Rejection Ratio	PSRR	25°C	65	100	-	dB	V_{CC}=5 to 30V
Output Source Current(Note 17,19)	I_{SOURCE}	25°C	20	30	-	mA	V_{+IN}=1V, V_{-IN}=0V V_{OUT}=0V, Short Current
		Full Range	10	-	-		
Output Sink Current(Note 17,19)	I_{SINK}	25°C	20	27	-	mA	V_{+IN}=0V, V_{-IN}=1V V_{OUT}=5V, Short Current
		Full Range	5	-	-		
		25°C	20	50	-	μA	V_{+IN}=0V, V_{-IN}=1V V_{OUT}=200mV
Channel Separation	CS	25°C	-	120	-	dB	f=1kHz, Input Referred
Slew Rate	SR	25°C	-	0.3	-	V/μs	V_{CC}=15V, Av=0dB R_L=2kΩ, C_L=100pF
Gain Bandwidth	GBW	25°C	-	0.8	-	MHz	V_{CC}=15V, V_{EE}=-15V R_L=2kΩ, C_L=100pF
Phase Margin	θ	25°C	-	80	-	deg	Av=40dB
Input Referred Noise Voltage	V_N	25°C	-	40	-	nV/√Hz	V_{CC}=15V, V_{EE}=-15V R_S=100Ω, V_{IN}=0V, f=1kHz

(Note 16) Absolute value
(Note 17) LM324xxx Full Range: T_A=-40°C to +85°C, LM2902xxx Full Range: T_A=-40°C to +125°C
(Note 18) LM2902xxx only.
(Note 19) Consider the power dissipation of the IC under high temperature when selecting the output current value.
There may be a case where the output current value is reduced due to the rise in IC temperature caused by the heat generated inside the IC.

©2015 ROHM Co., Ltd. All rights reserved.

Downloaded from Arrow.com.

Description of Electrical Characteristics

Below are the descriptions of the relevant electrical terms used in this datasheet. Items and symbols used are also shown. Note that item names, symbols, and their meanings may differ from those of another manufacturer's document or general document.

1. Absolute Maximum Ratings

Absolute maximum rating items indicate the conditions which must not be exceeded. Application of voltage in excess of the absolute maximum rating or use out of absolute maximum rated temperature environment may cause deterioration of electrical characteristics.

(1) Supply Voltage (V_{CC}/V_{EE})
Indicates the maximum voltage that can be applied between the VCC pin and VEE pin without deterioration of characteristics of internal circuit.

(2) Differential Input Voltage (V_{ID})
Indicates the maximum voltage that can be applied between the non-inverting and inverting pins without damaging the IC.

(3) Input Common-mode Voltage Range (V_{ICM})
Indicates the maximum voltage that can be applied to the non-inverting and inverting pins without deterioration or destruction of electrical characteristics. Input common-mode voltage range of the maximum ratings does not assure normal operation of IC. For normal operation, use the IC within the input common-mode voltage range characteristics.

(4) Power Dissipation (P_D)
Indicates the power that can be consumed by the IC when mounted on a specific board at the ambient temperature 25°C (normal temperature). As for package product, P_D is determined by the temperature that can be permitted by the IC in the package (maximum junction temperature) and the thermal resistance of the package.

2. Electrical Characteristics

(1) Input Offset Voltage (V_{IO})
Indicates the voltage difference between non-inverting pin and inverting pin. It can be translated to the input voltage difference required for setting the output voltage to 0V.

(2) Input Offset Voltage Drift ($\Delta V_{IO}/\Delta T$)
Denotes the ratio of the input offset voltage fluctuation to the ambient temperature fluctuation.

(3) Input Offset Current (I_{IO})
Indicates the difference of input bias current between the non-inverting and inverting pins.

(4) Input Bias Current (I_B)
Indicates the current that flows into or out of the input pin. It is defined by the average of input bias currents at the non-inverting and inverting pins.

(5) Supply Current (I_{CC})
Indicates the current that flows within the IC under specified no-load conditions.

(6) Maximum Output Voltage (High) / Maximum Output Voltage (Low) (V_{OH}/V_{OL})
Indicates the voltage range of the output under specified load condition. It is typically divided into maximum output voltage high and low. Maximum output voltage high indicates the upper limit of output voltage. Maximum output voltage low indicates the lower limit.

(7) Large Signal Voltage Gain (A_V)
Indicates the amplification rate (gain) of output voltage against the voltage difference between non-inverting pin and inverting pin. It is normally the amplification rate (gain) with reference to DC voltage.
Av = (Output Voltage) / (Differential Input Voltage)

(8) Input Common-mode Voltage Range (V_{ICM})
Indicates the input voltage range at which IC normally operates.

(9) Common-mode Rejection Ratio (CMRR)
Indicates the ratio of fluctuation of input offset voltage when the input common-mode voltage is changed. It is normally the fluctuation of DC.
CMRR = (Change of Input Common-mode Voltage)/(Input Offset Fluctuation)

©2015 ROHM Co., Ltd. All rights reserved.

Downloaded from Arrow.com.

(10) Power Supply Rejection Ratio (PSRR)
Indicates the ratio of fluctuation of input offset voltage when supply voltage is changed.
It is normally the fluctuation of DC.
PSRR= (Change of Power Supply Voltage)/(Input Offset Fluctuation)

(11) Output Source Current/ Output Sink Current (I_{SOURCE} / I_{SINK})
The maximum current that the IC can output under specific output conditions. The output source current indicates the current flowing out from the IC, and the output sink current indicates the current flowing into the IC.

(12) Channel Separation (CS)
Indicates the fluctuation in the output voltage of the driven channel with reference to the change of output voltage of the channel which is not driven.

(13) Slew Rate (SR)
Indicates the rate of the change of the output voltage with time when a step input signal is applied.

(14) Gain Bandwidth (GBW)
The product of the open-loop voltage gain and the frequency at which the voltage gain decreases 6dB/octave.

(15) Phase Margin (θ)
Indicates the margin of phase from 180 degree phase lag at unity gain frequency.

(16) Input Referred Noise Voltage (V_N)
Indicates a noise voltage generated inside the operational amplifier equivalent by ideal voltage source connected in series with input pin.

©2015 ROHM Co., Ltd. All rights reserved.

Downloaded from Arrow.com.

Typical Performance Curves

○LM358xxx, LM2904xxx

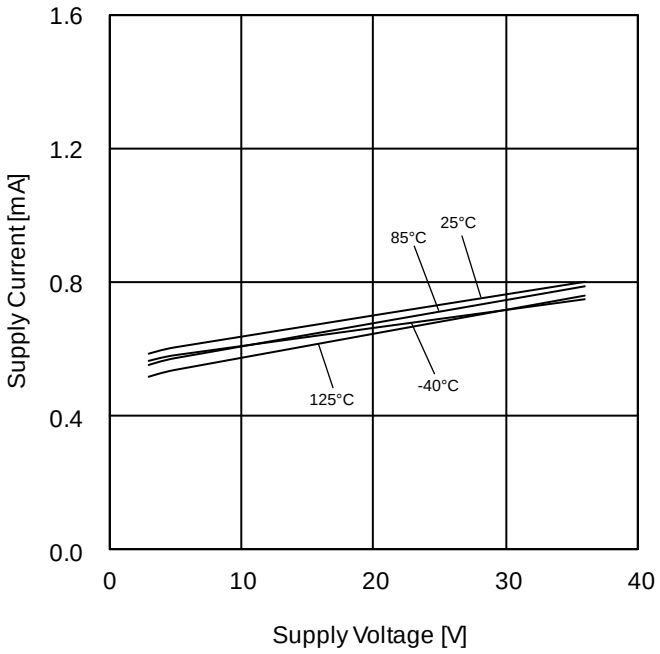

Figure 1. Supply Current vs Supply Voltage

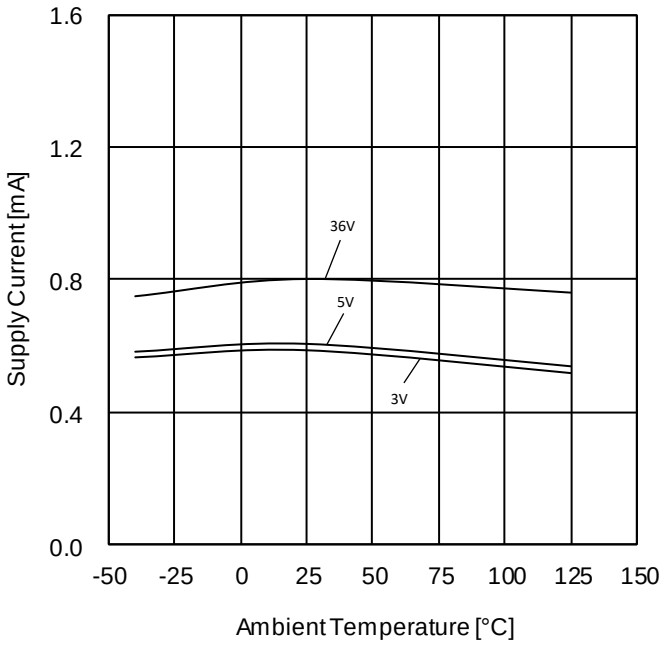

Figure 2. Supply Current vs Ambient Temperature

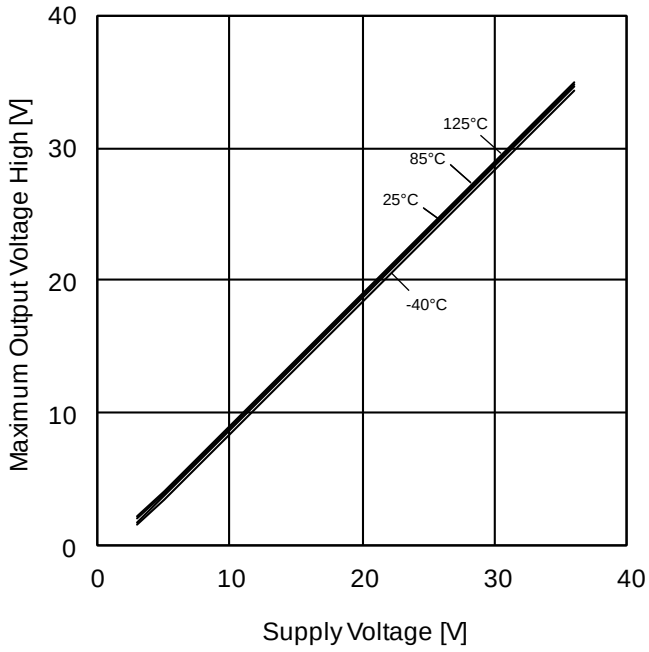

Figure 3. Maximum Output Voltage (High) vs Supply Voltage (R_L=10kΩ)

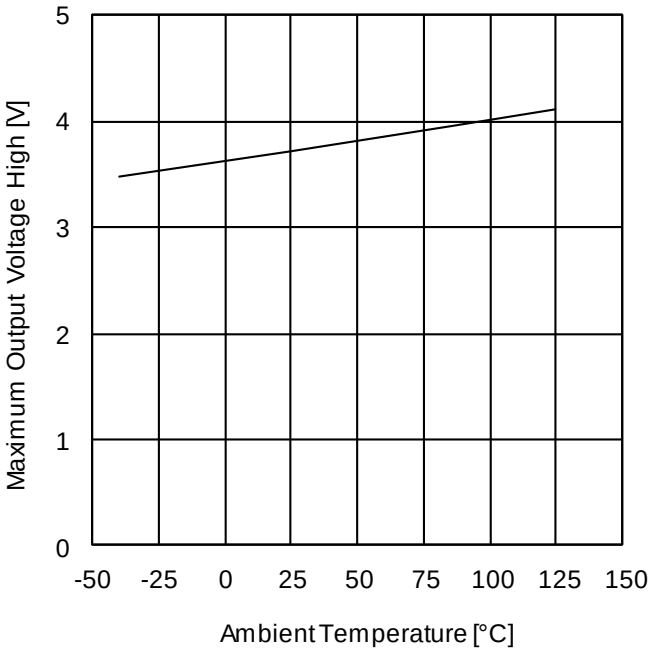

Figure 4. Maximum Output Voltage (High) vs Ambient Temperature (V_{CC}=5V, R_L=10kΩ)

(*) The above data are measurement value of typical sample, they are not guaranteed.
LM358xxx: -40°C to +85°C LM2904xxx: -40°C to 125°C

©2015 ROHM Co., Ltd. All rights reserved.

Downloaded from Arrow.com.

Typical Performance Curves - continued

○**LM358xxx, LM2904xxx**

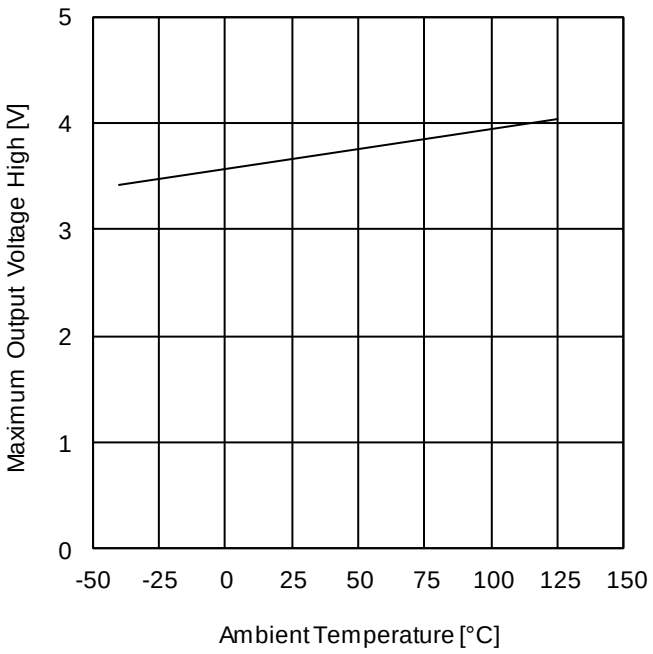

Figure 5. Maximum Output Voltage (High) vs Ambient Temperature (V_{CC}=5V, R_L=2kΩ)

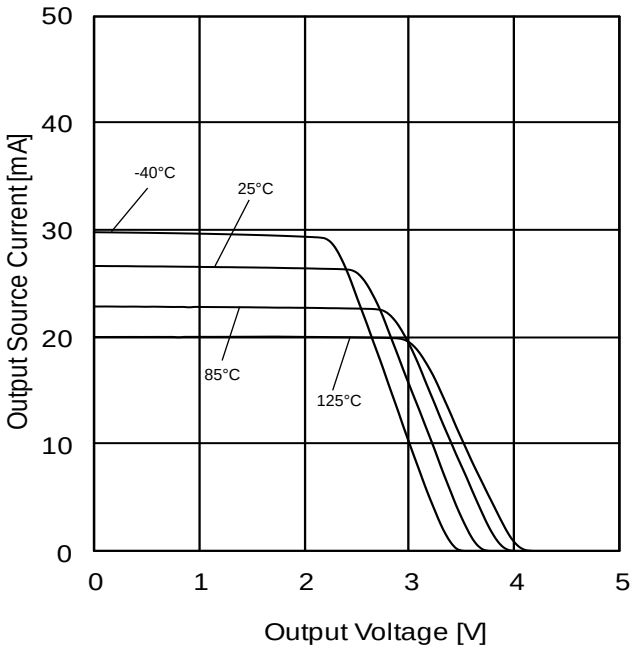

Figure 6. Output Source Current vs Output Voltage (V_{CC}=5V)

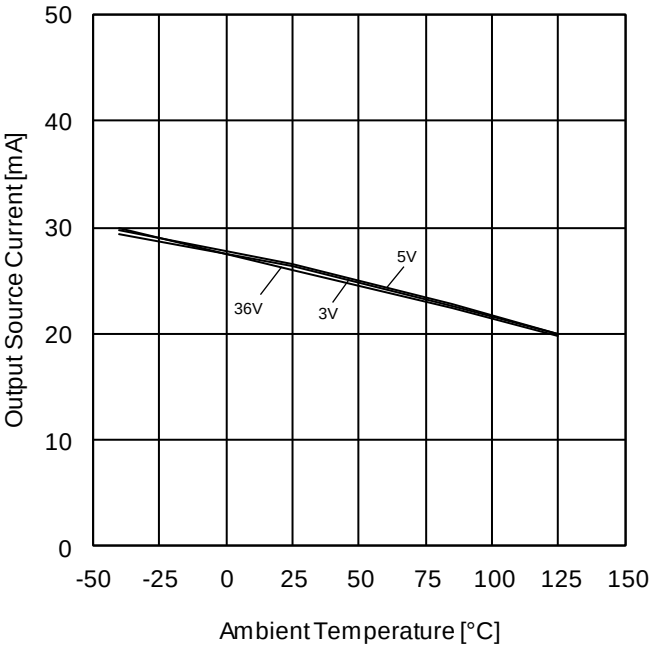

Figure 7. Output Source Current vs Ambient Temperature (V_{OUT}=0V)

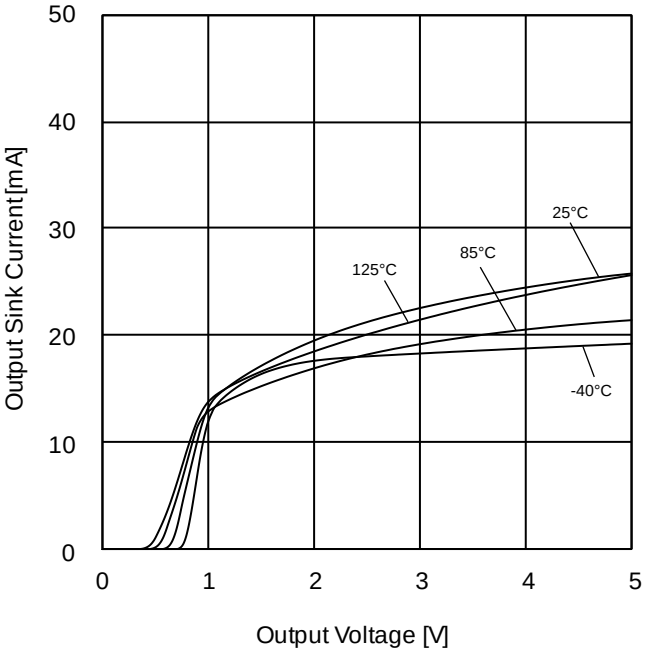

Figure 8. Output Sink Current vs Output Voltage (V_{CC}=5V)

(*) The above data are measurement value of typical sample, they are not guaranteed.
LM358xxx: -40°C to +85°C LM2904xxx: -40°C to 125°C

©2015 ROHM Co., Ltd. All rights reserved.

Downloaded from Arrow.com.

Typical Performance Curves - continued

○LM358xxx, LM2904xxx

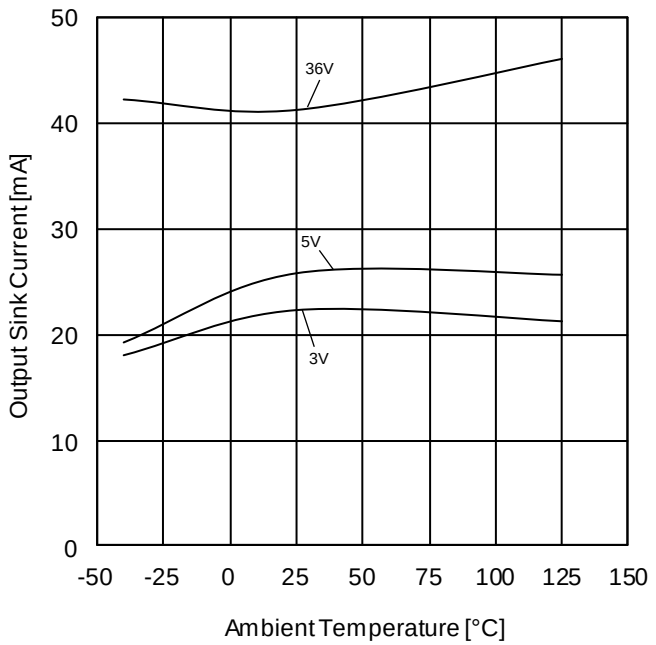

Figure 9. Output Sink Current vs Ambient Temperature (V_{OUT}=V_{CC})

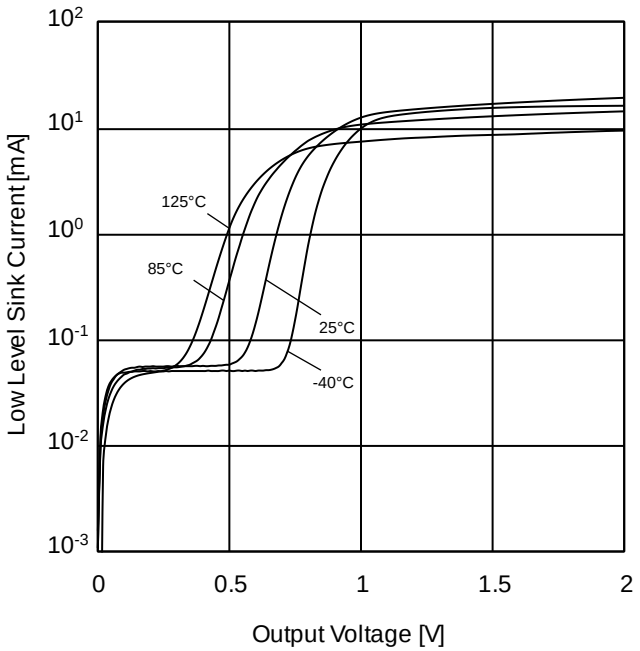

Figure 10. Low Level Sink Current vs Output Voltage (V_{CC}=5V)

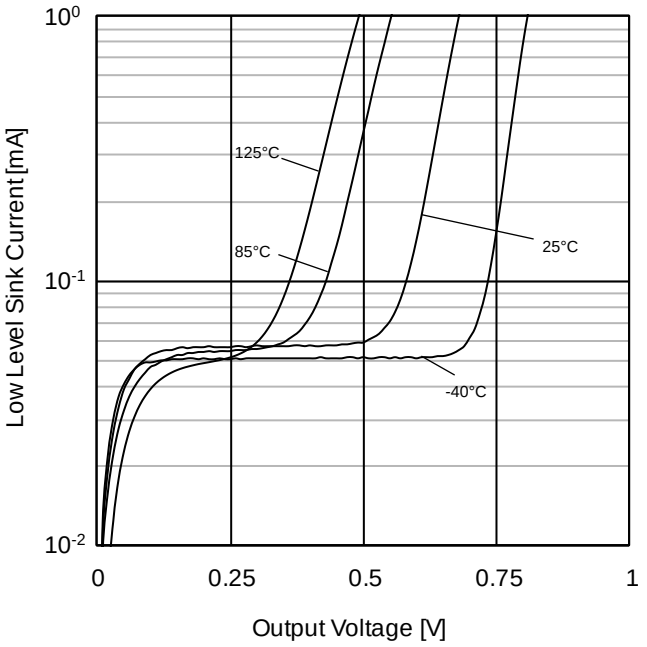

Figure 11. Low Level Sink Current vs Output Voltage (Enlarged view) (V_{CC}=5V)

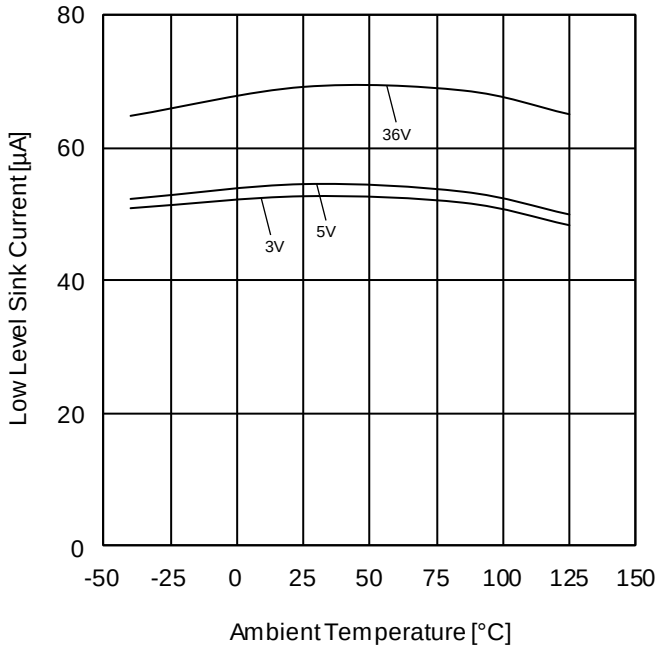

Figure 12. Low Level Sink Current vs Ambient Temperature (V_{OUT}=200mV)

(*) The above data are measurement value of typical sample, they are not guaranteed.
LM358xxx: -40°C to +85°C LM2904xxx: -40°C to 125°C

©2015 ROHM Co., Ltd. All rights reserved.

Downloaded from Arrow.com.

Typical Performance Curves - continued

○LM358xxx, LM2904xxx

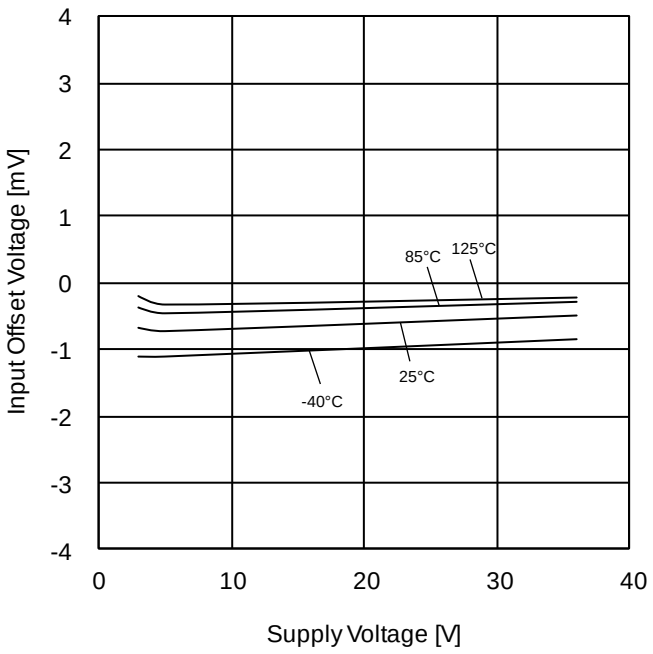

Figure 13. Input Offset Voltage vs Supply Voltage (V_{ICM}=V_{CC}/2, E_K=-V_{CC}/2)

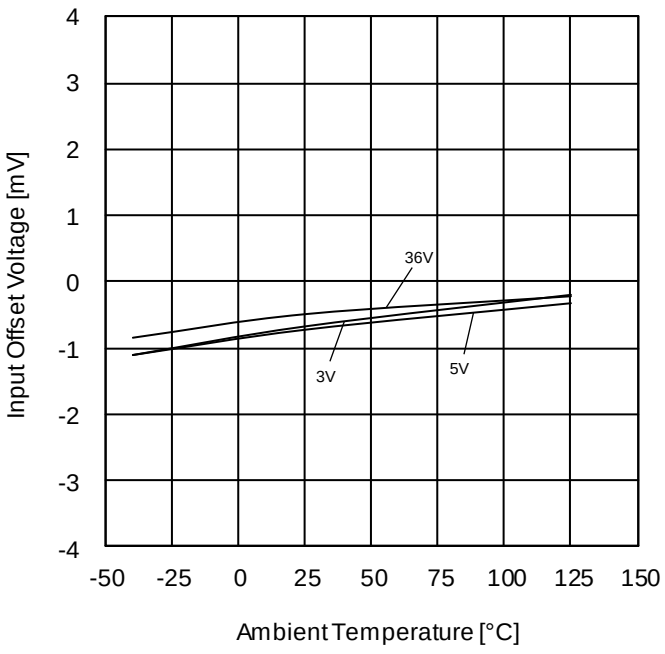

Figure 14. Input Offset Voltage vs Ambient Temperature (V_{ICM}=V_{CC}/2, E_K=-V_{CC}/2)

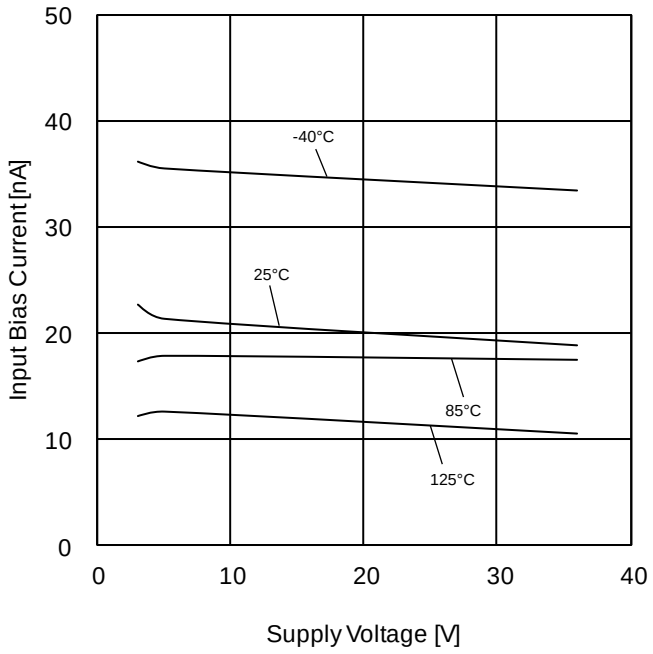

Figure 15. Input Bias Current vs Supply Voltage (V_{ICM}=V_{CC}/2, E_K=-V_{CC}/2)

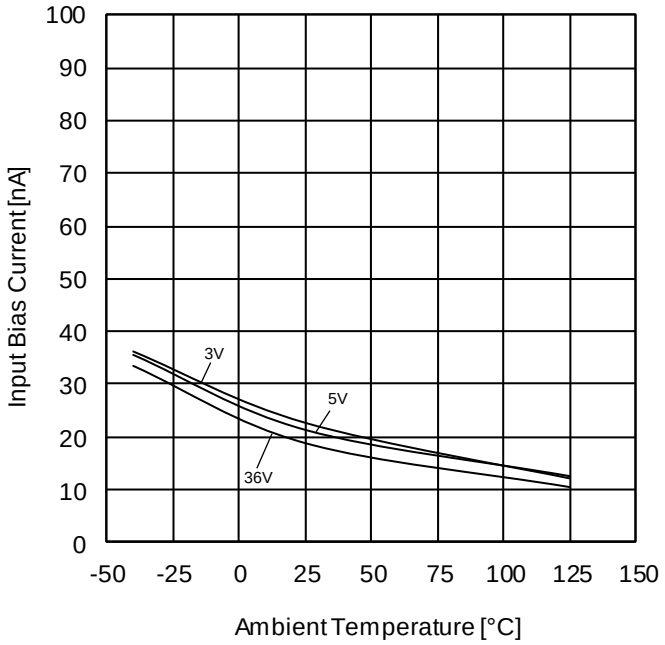

Figure 16. Input Bias Current vs Ambient Temperature (V_{ICM}=V_{CC}/2, E_K=-V_{CC}/2)

(*) The above data are measurement value of typical sample, they are not guaranteed.
LM358xxx: -40°C to +85°C LM2904xxx: -40°C to 125°C

©2015 ROHM Co., Ltd. All rights reserved.

Downloaded from Arrow.com.

Typical Performance Curves - continued

○LM358xxx, LM2904xxx

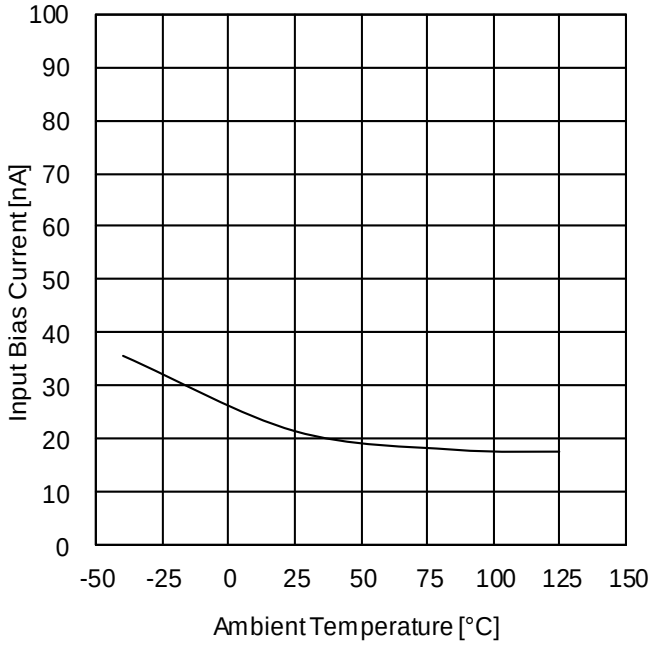

Figure 17. Input Bias Current vs Ambient Temperature (V_{CC}=30V, V_{ICM}=28V, E_K=-1.4V)

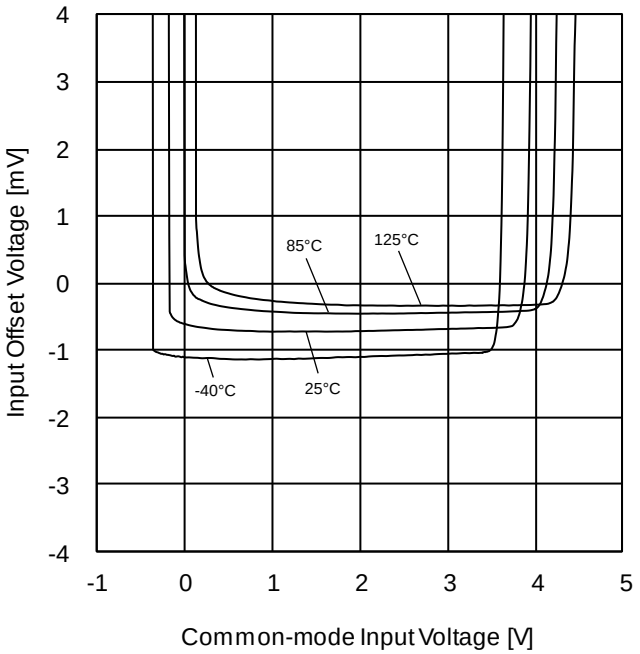

Figure 18. Input Offset Voltage vs Common-mode Input Voltage (V_{CC}=5V)

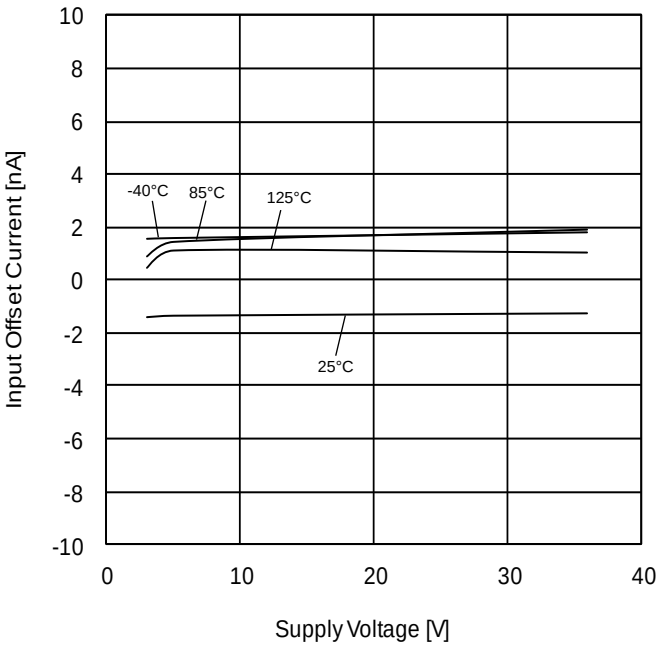

Figure 19. Input Offset Current vs Supply Voltage (V_{ICM}=V_{CC}/2, E_K=-V_{CC}/2)

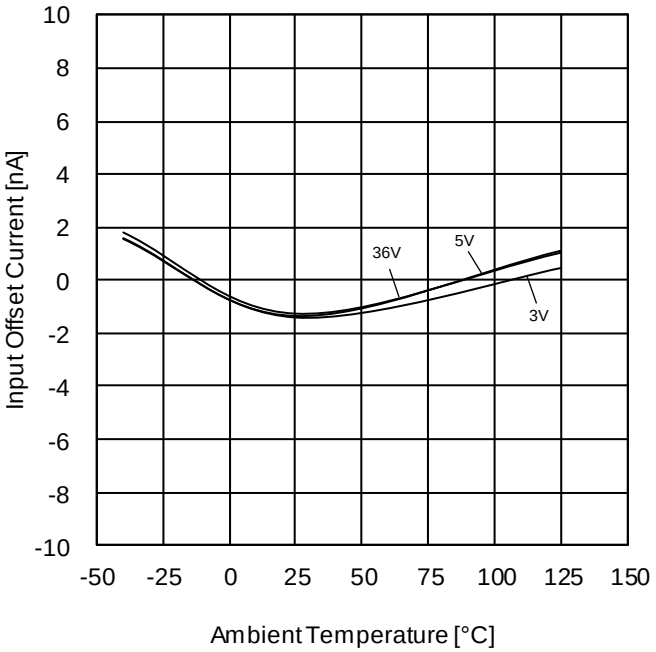

Figure 20. Input Offset Current vs Ambient Temperature (V_{ICM}=V_{CC}/2, E_K=-V_{CC}/2)

(*) The above data are measurement value of typical sample, they are not guaranteed.
LM358xxx: -40°C to +85°C LM2904xxx: -40°C to 125°C

©2015 ROHM Co., Ltd. All rights reserved.

Downloaded from Arrow.com.

Typical Performance Curves - continued

○LM358xxx, LM2904xxx

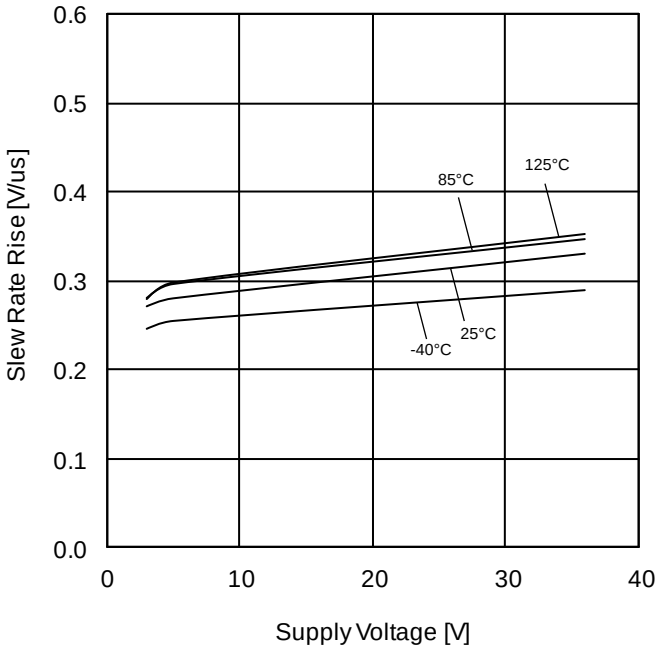

Figure 21. Slew Rate Rise vs Supply Voltage
(R_L=2kΩ, Low to High)

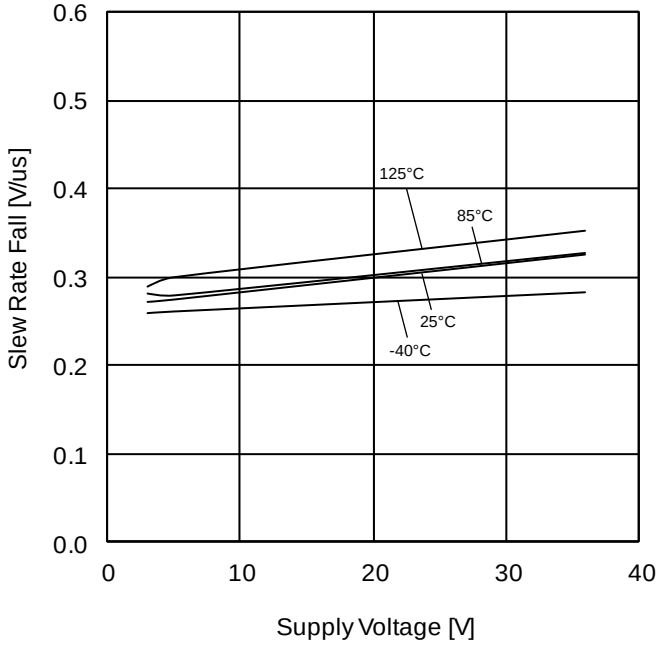

Figure 22. Slew Rate Fall vs Supply Voltage
(R_L=2kΩ, High to Low)

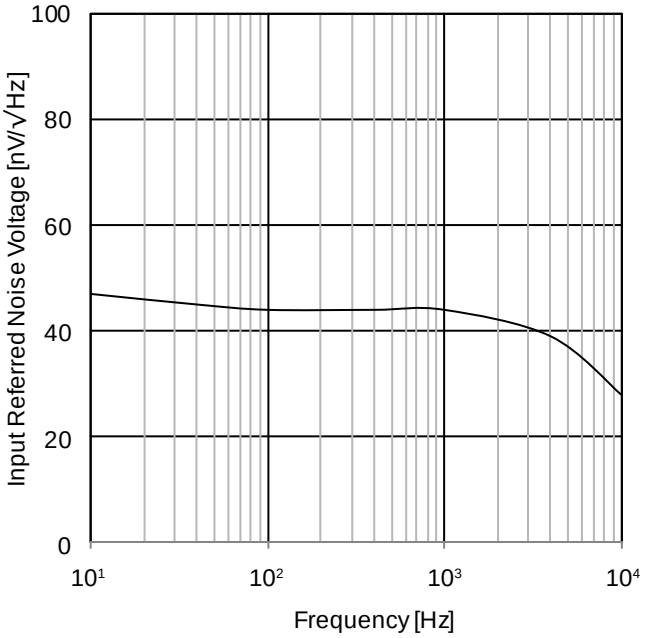

Figure 23. Input Referred Noise Voltage vs Frequency (V_{CC}=5V)

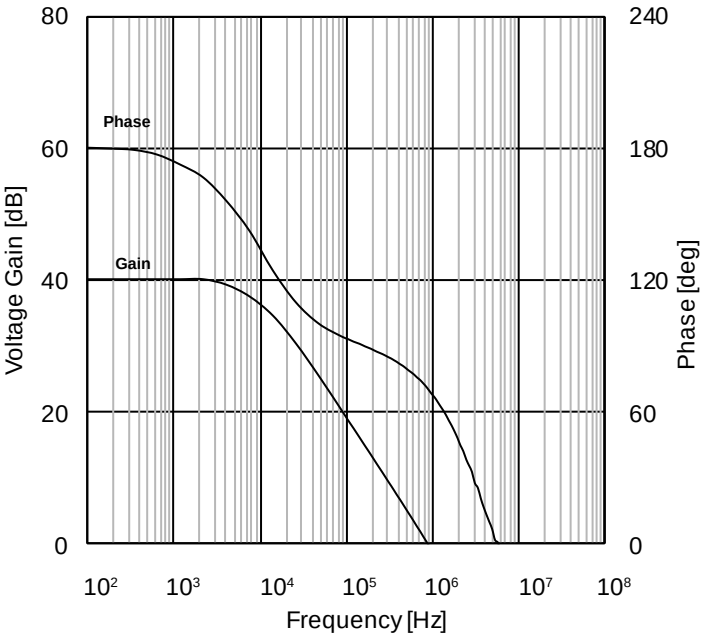

Figure 24. Voltage Gain, Phase vs Frequency
(V_{CC}=30V, R_L=2kΩ, C_L=100pF)

(*) The above data are measurement value of typical sample, they are not guaranteed.
LM358xxx: -40°C to +85°C LM2904xxx: -40°C to 125°C

©2015 ROHM Co., Ltd. All rights reserved.

Downloaded from Arrow.com.

Typical Performance Curves - continued

○LM358xxx, LM2904xxx

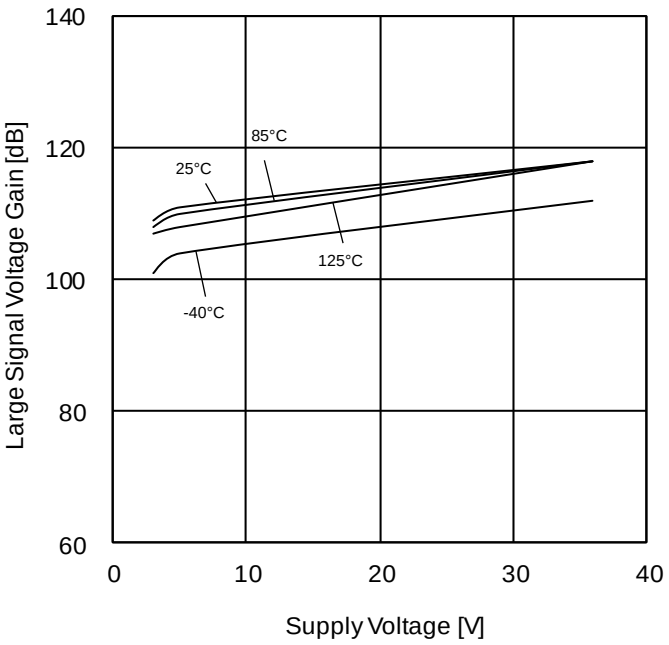

Figure 25. Large Signal Voltage Gain vs Supply Voltage (R_L=2kΩ)

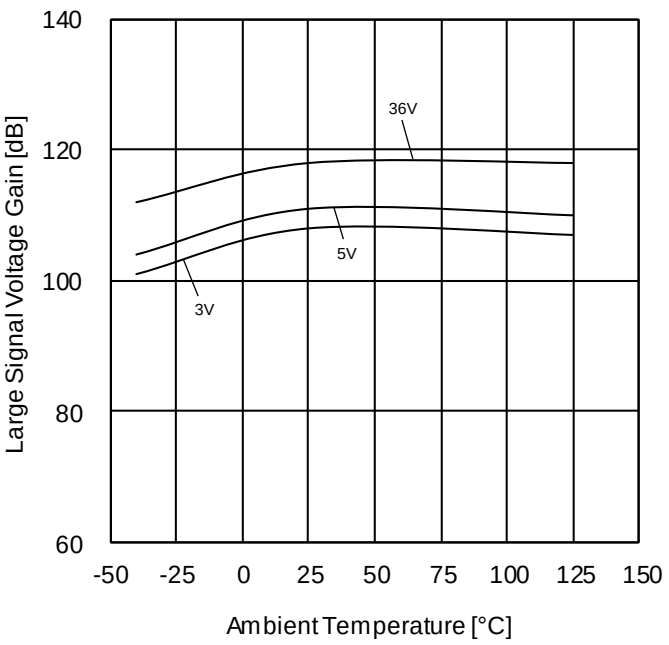

Figure 26. Large Signal Voltage Gain vs Ambient Temperature (R_L=2kΩ)

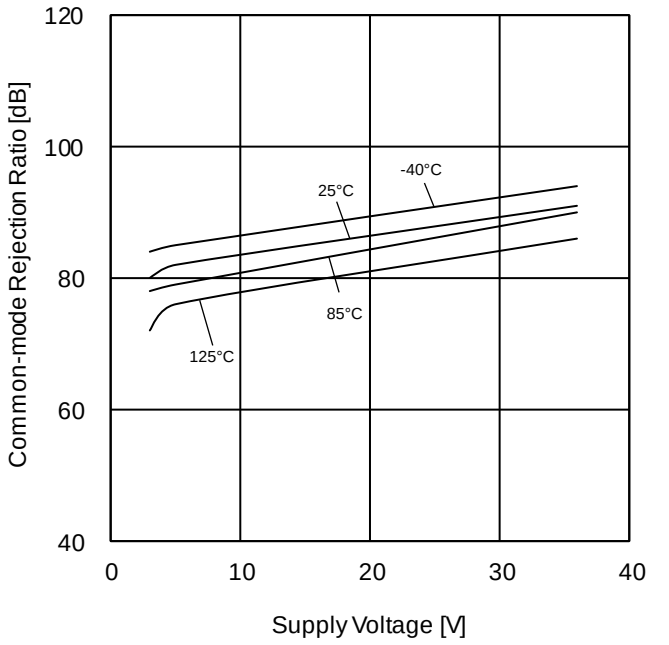

Figure 27. Common-mode Rejection Ratio vs Supply Voltage

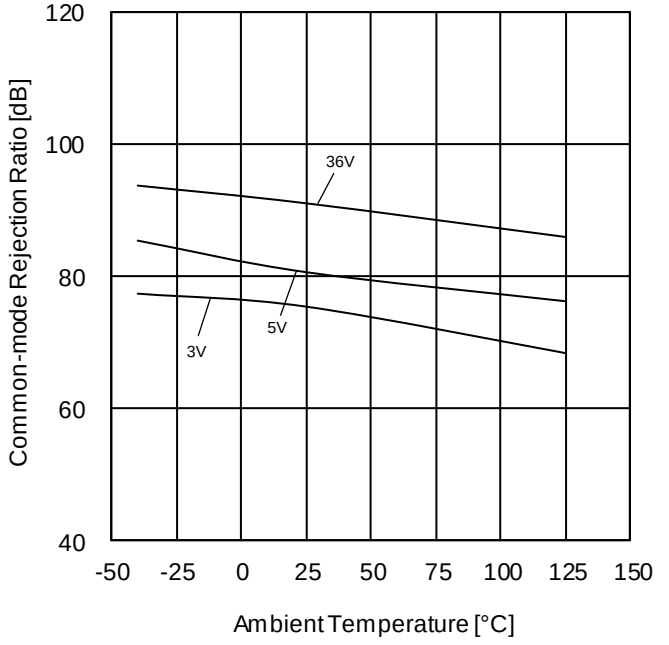

Figure 28. Common-mode Rejection Ratio vs Ambient Temperature

(*) The above data are measurement value of typical sample, they are not guaranteed.
LM358xxx: -40°C to +85°C LM2904xxx: -40°C to 125°C

©2015 ROHM Co., Ltd. All rights reserved.

Downloaded from Arrow.com.

Typical Performance Curves - continued

○LM358xxx, LM2904xxx

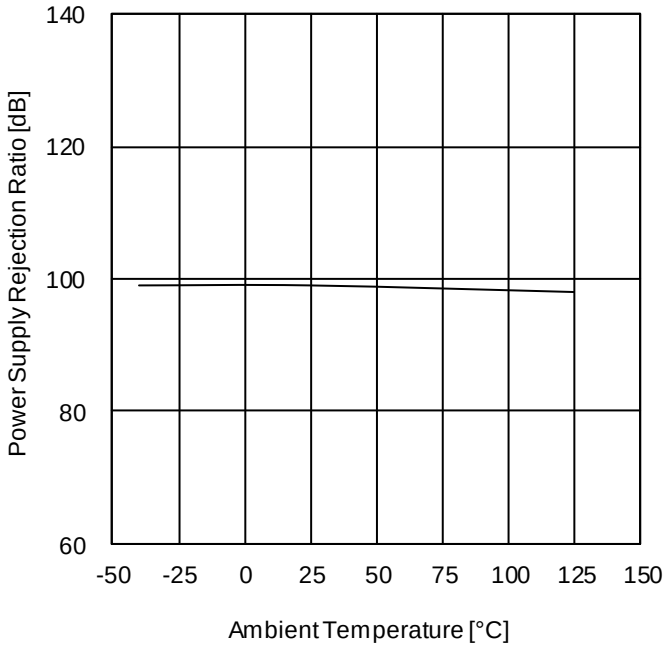

Figure 29. Power Supply Rejection Ratio vs Ambient Temperature

(*) The above data are measurement value of typical sample, they are not guaranteed.
LM358xxx: -40°C to +85°C LM2904xxx: -40°C to 125°C

©2015 ROHM Co., Ltd. All rights reserved.

Downloaded from Arrow.com.

Typical Performance Curves - continued

○LM324xxx, LM2902xxx

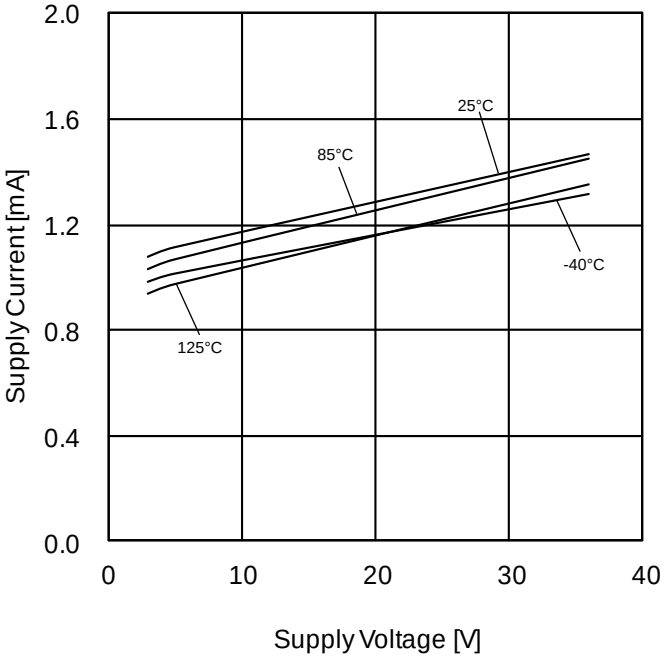

Figure 30. 回路電流ー電源電圧特性

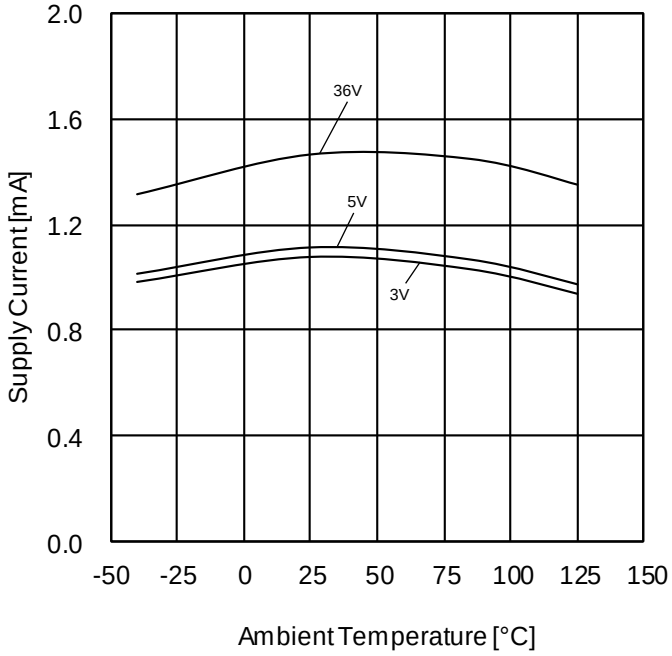

Figure 31. Supply Current vs Ambient Temperature

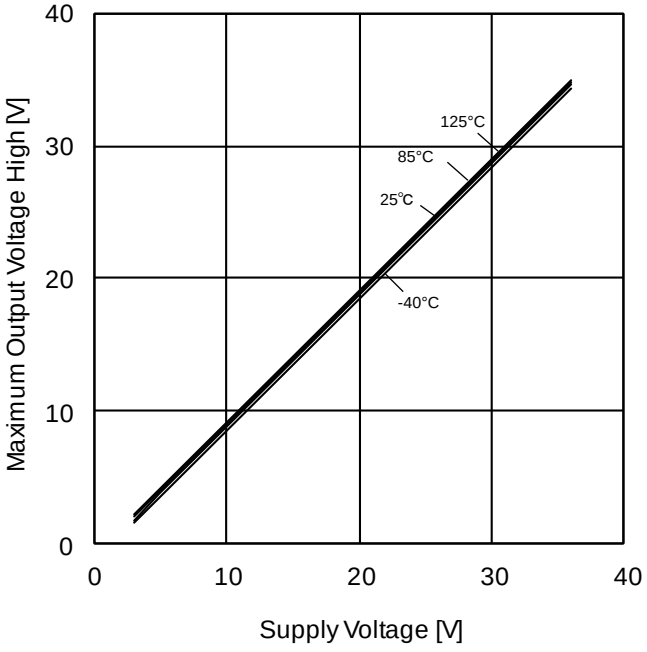

Figure 32. Maximum Output Voltage (High) vs Supply Voltage (R_L=10kΩ)

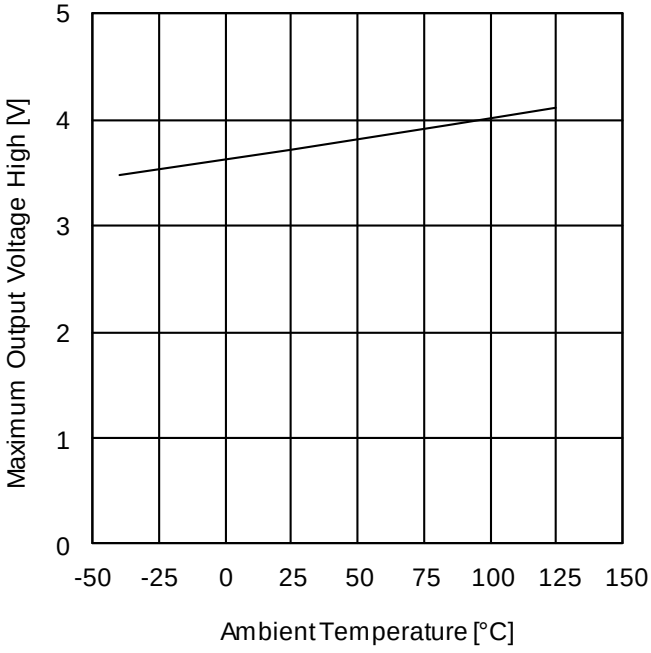

Figure 33. Maximum Output Voltage (High) vs Ambient Temperature (V_{CC}=5V, R_L=10kΩ)

(*) The above data are measurement value of typical sample, they are not guaranteed.
LM324xxx: -40°C to +85°C LM2902xxx: -40°C to 125°C

©2015 ROHM Co., Ltd. All rights reserved.

Downloaded from Arrow.com.

Typical Performance Curves - continued

○**LM324xxx, LM2902xxx**

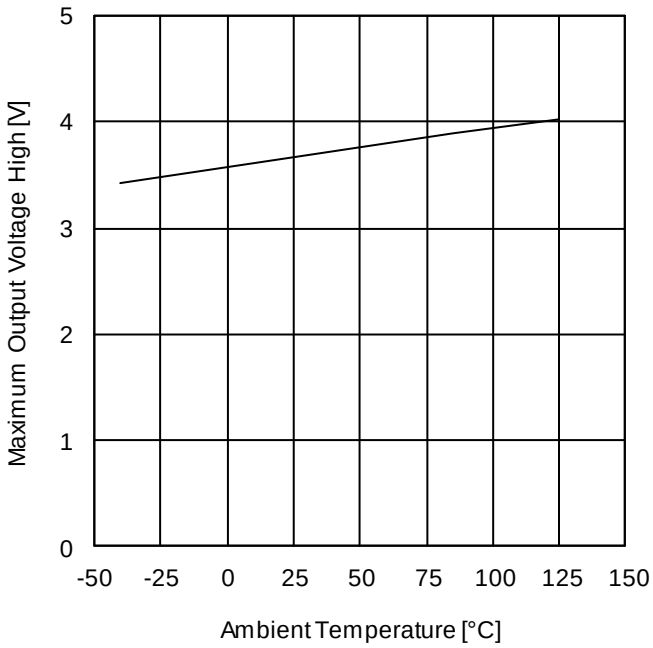

Figure 34. Maximum Output Voltage (High) vs Ambient Temperature (V_{CC}=5V, R_L=2kΩ)

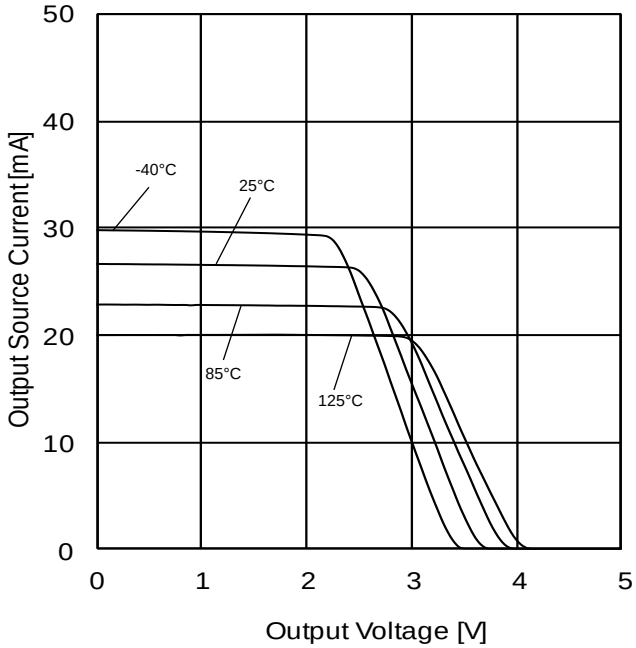

Figure 35. Output Source Current vs Output Voltage (V_{CC}=5V)

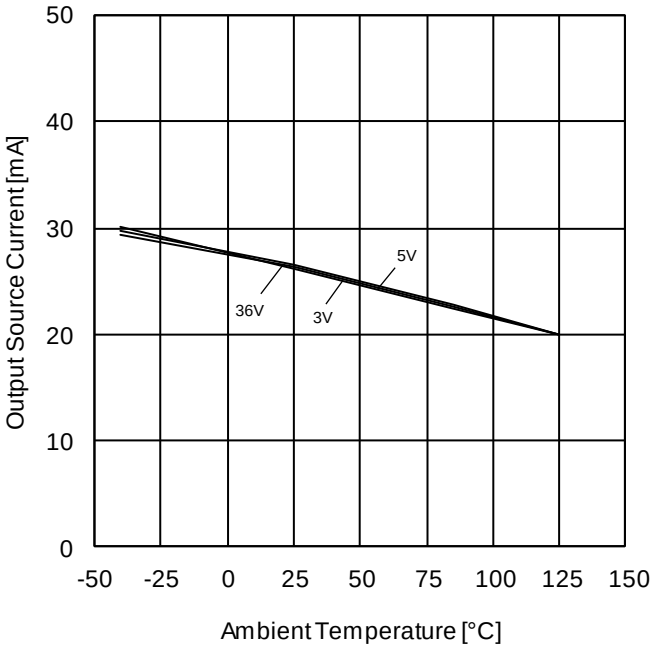

Figure 36. Output Source Current vs Ambient Temperature (V_{OUT}=0V)

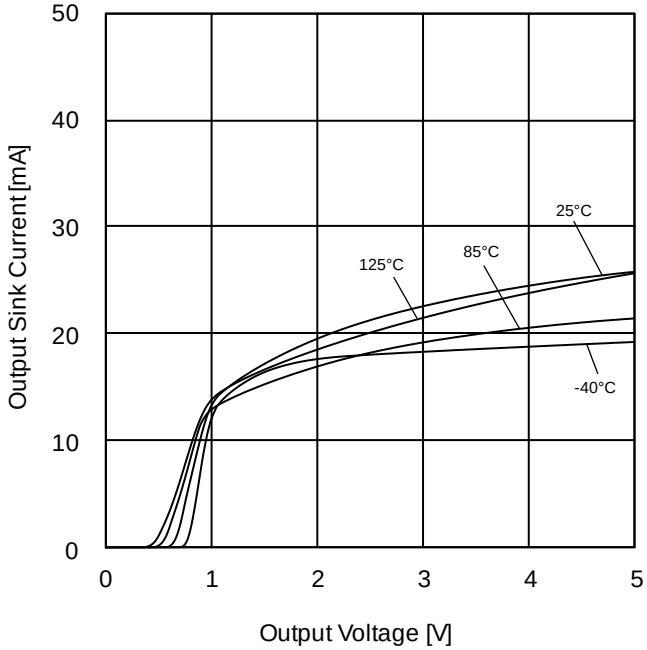

Figure 37. Output Sink Current vs Output Voltage (V_{CC}=5V)

(*) The above data are measurement value of typical sample, they are not guaranteed.
LM324xxx: -40°C to +85°C LM2902xxx: -40°C to 125°C

©2015 ROHM Co., Ltd. All rights reserved.

Downloaded from Arrow.com.

Typical Performance Curves - continued

○LM324xxx, LM2902xxx

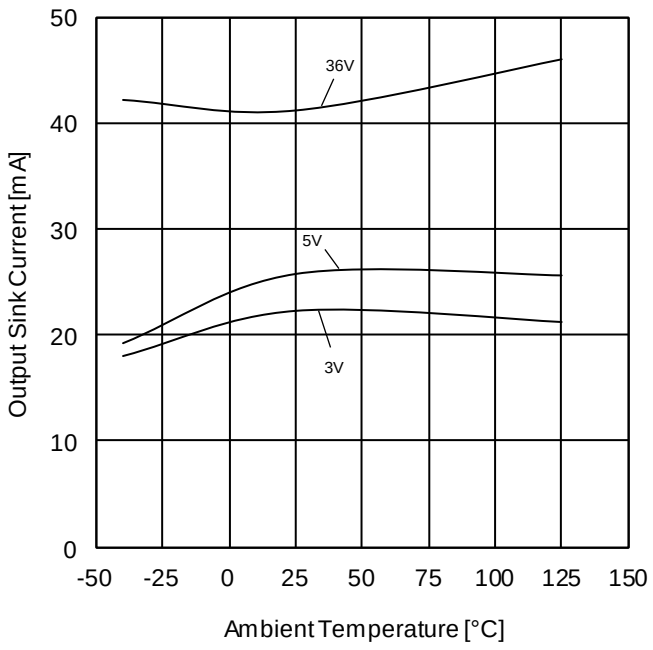

Figure 38. Output Sink Current vs Ambient Temperature (V_{OUT}=V_{CC})

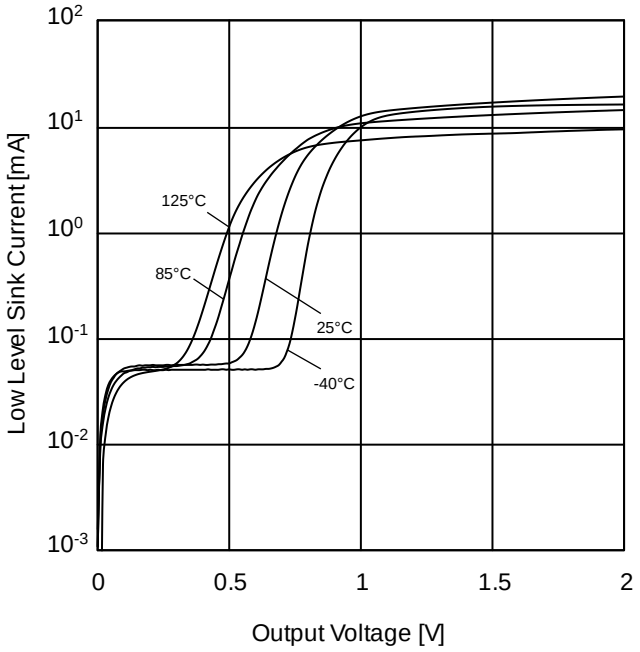

Figure 39. Low Level Sink Current vs Output Voltage (V_{CC}=5V)

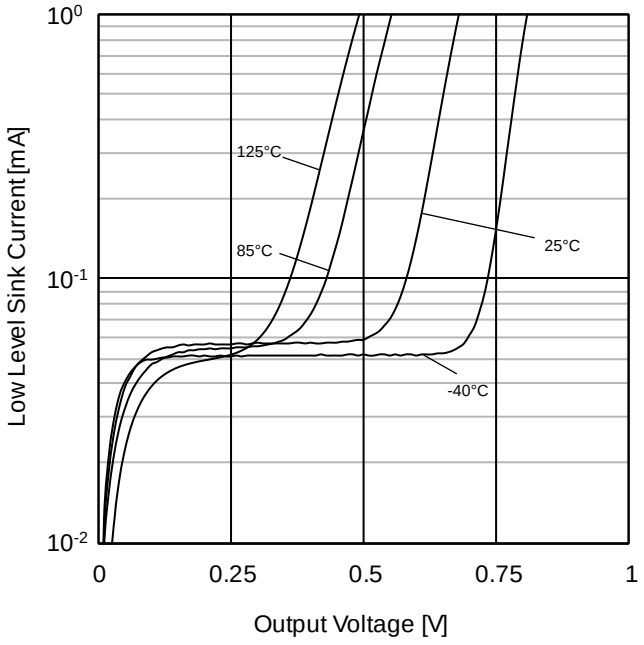

Figure 40. Low Level Sink Current vs Output Voltage (Enlarged view) (V_{CC}=5V)

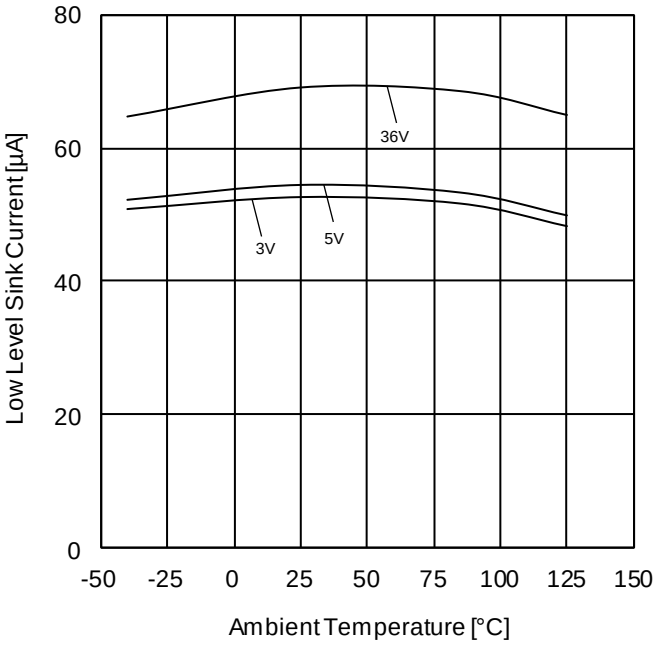

Figure 41. Low Level Sink Current vs Ambient Temperature (V_{OUT}=200mV)

(*) The above data are measurement value of typical sample, they are not guaranteed.
LM324xxx: -40°C to +85°C LM2902xxx: -40°C to 125°C

©2015 ROHM Co., Ltd. All rights reserved.

Downloaded from Arrow.com.

Typical Performance Curves - continued

○LM324xxx, LM2902xxx

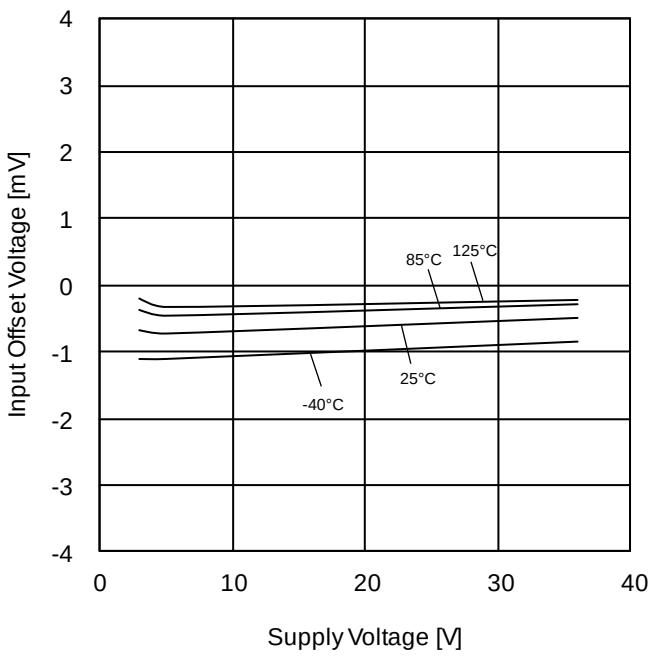

Figure 42. Input Offset Voltage vs Supply Voltage (V_{ICM}=V_{CC}/2, E_K=-V_{CC}/2)

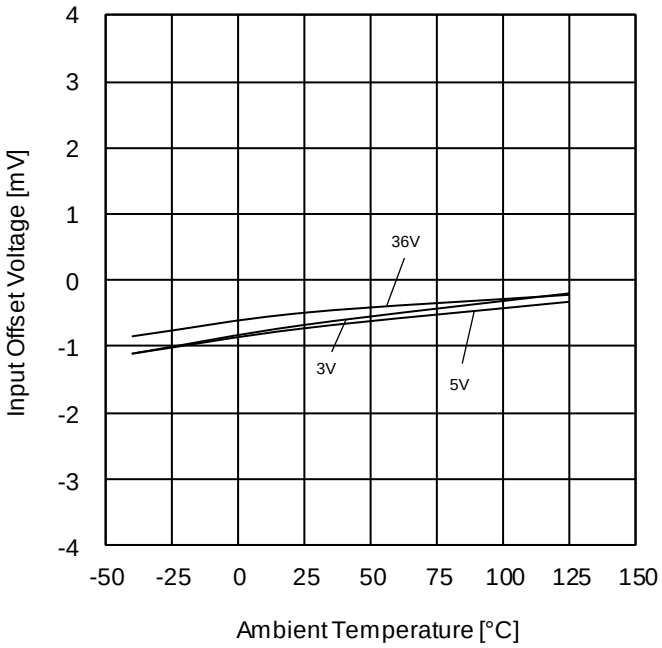

Figure 43. Input Offset Voltage vs Ambient Temperature (V_{ICM}=V_{CC}/2, E_K=-V_{CC}/2)

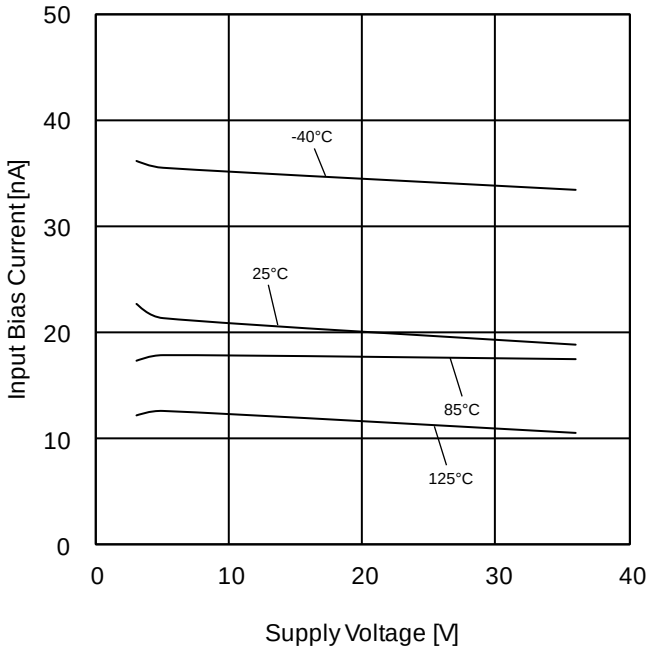

Figure 44. Input Bias Current vs Supply Voltage (V_{ICM}=V_{CC}/2, E_K=-V_{CC}/2)

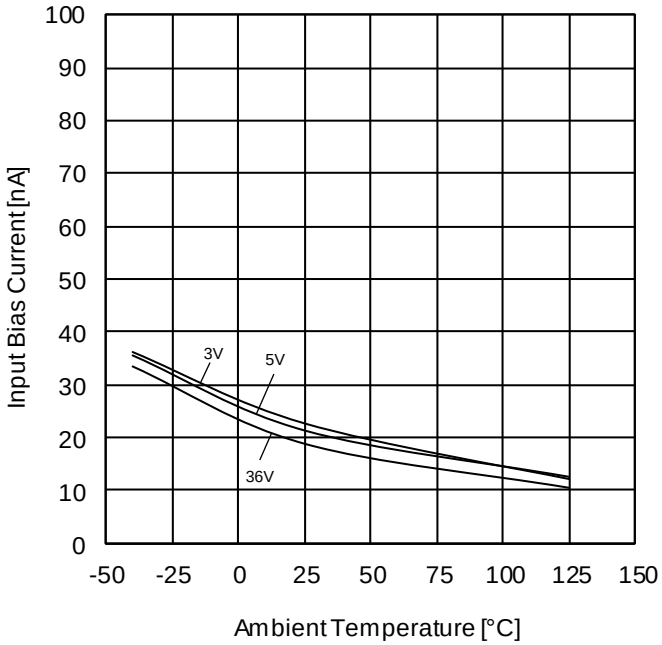

Figure 45. Input Bias Current vs Ambient Temperature (V_{ICM}=V_{CC}/2, E_K=-V_{CC}/2)

(*) The above data are measurement value of typical sample, they are not guaranteed.
LM324xxx: -40°C to +85°C LM2902xxx: -40°C to 125°C

©2015 ROHM Co., Ltd. All rights reserved.

Downloaded from Arrow.com.

Typical Performance Curves - continued

○LM324xxx, LM2902xxx

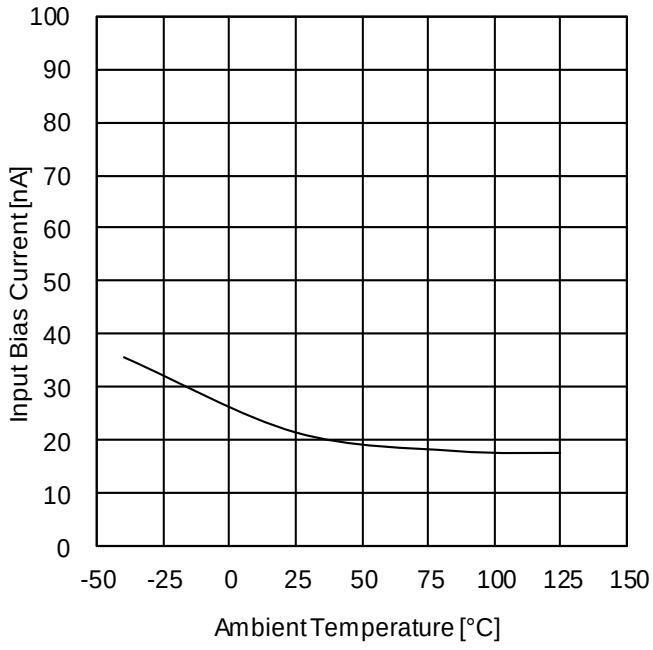

Figure 46. Input Bias Current vs Ambient Temperature (V_{CC}=30V, V_{ICM}=28V, E_K=-1.4V)

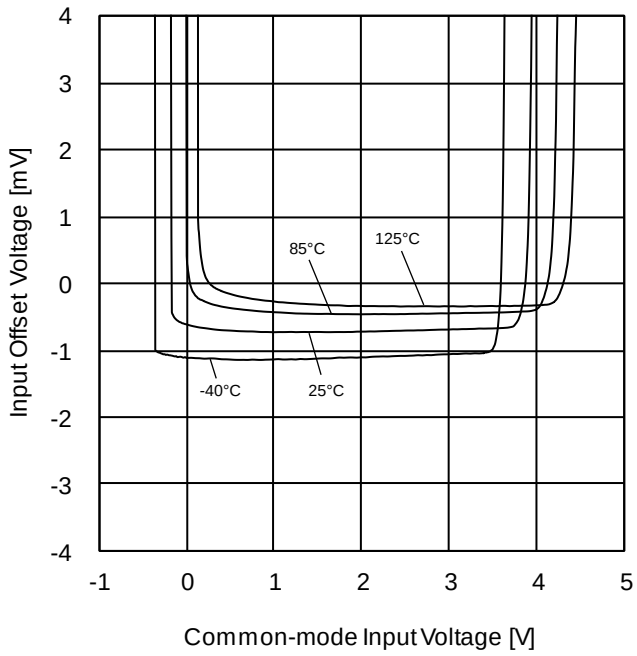

Figure 47. Input Offset Voltage vs Common-mode Input Voltage (V_{CC}=5V)

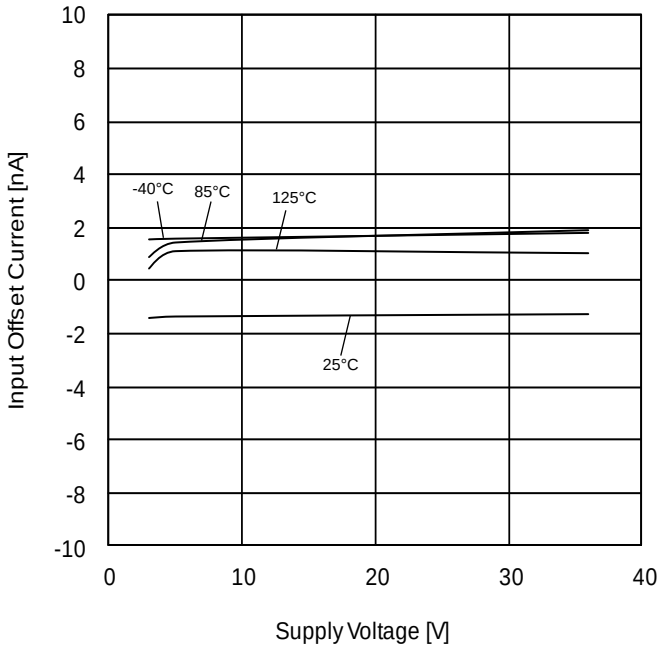

Figure 48. Input Offset Current vs Supply Voltage (V_{ICM}=V_{CC}/2, E_K=-V_{CC}/2)

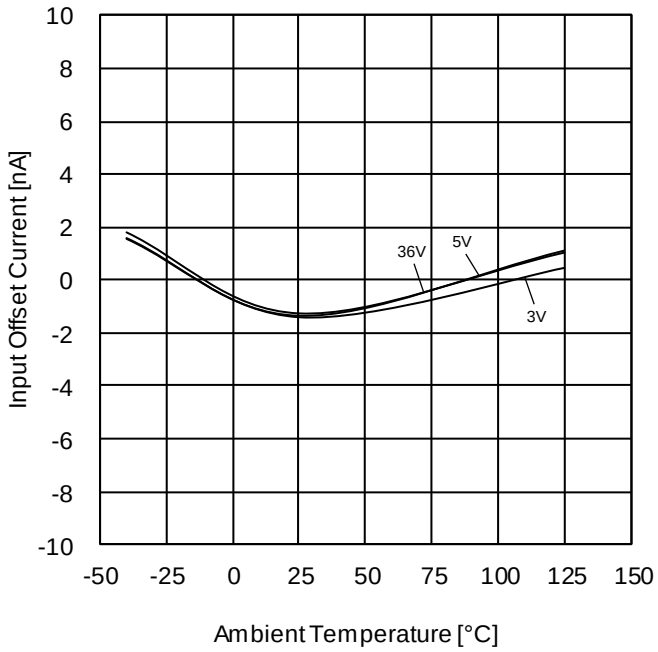

Figure 49. Input Offset Current vs Ambient Temperature (V_{ICM}=V_{CC}/2, E_K=-V_{CC}/2)

(*) The above data are measurement value of typical sample, they are not guaranteed.
LM324xxx: -40°C to +85°C LM2902xxx: -40°C to 125°C

©2015 ROHM Co., Ltd. All rights reserved.

Downloaded from Arrow.com.

Typical Performance Curves - continued

○LM324xxx, LM2902xxx

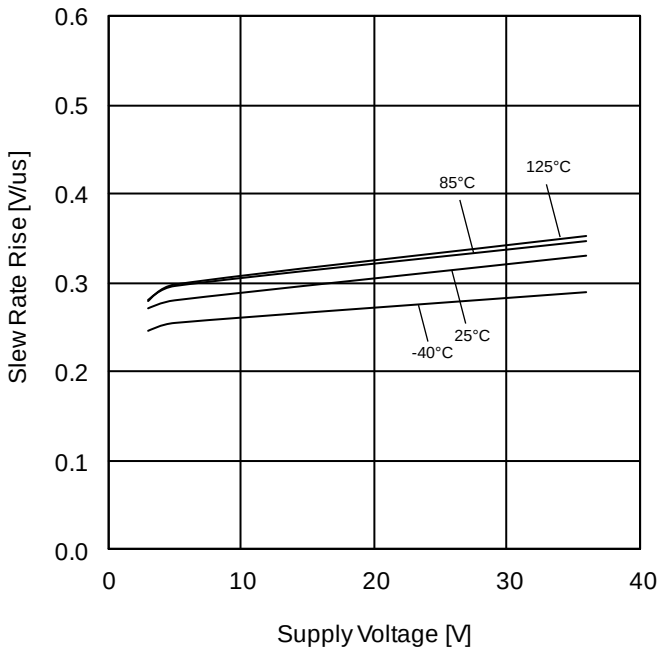

Figure 50. Slew Rate Rise vs Supply Voltage
(R_L=2kΩ, Low to High)

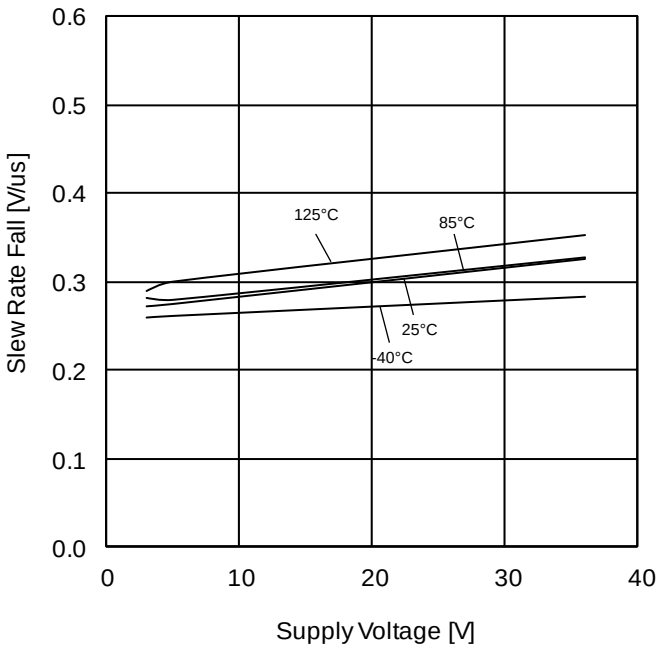

Figure 51. Slew Rate Fall vs Supply Voltage
(R_L=2kΩ, High to Low)

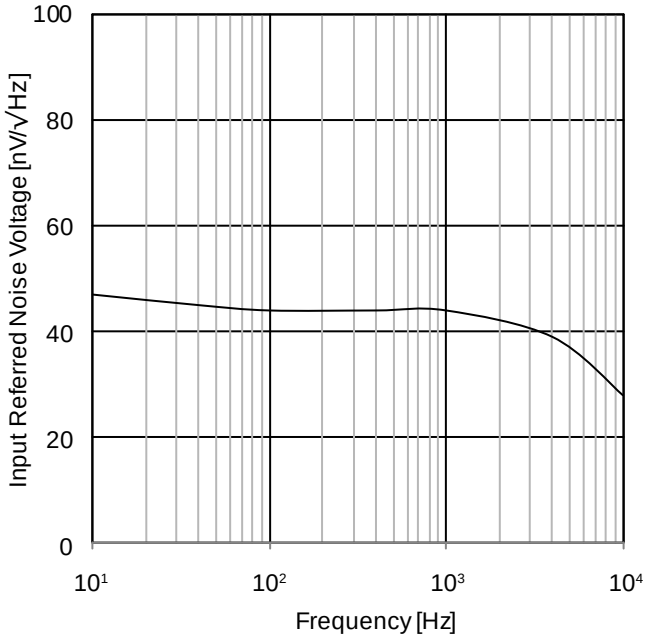

Figure 52. Input Referred Noise Voltage vs Frequency (V_{CC}=5V)

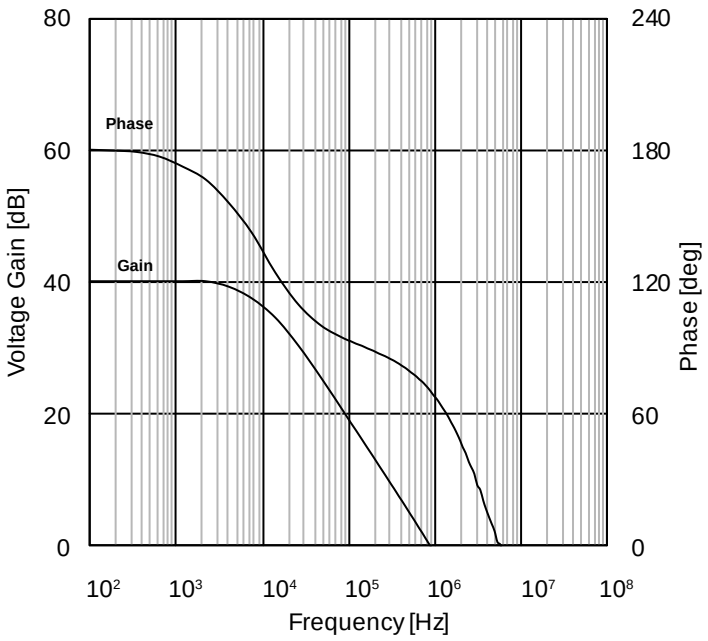

Figure 53. Voltage Gain, Phase vs Frequency
(V_{CC}=30V, R_L=2kΩ, C_L=100pF)

(*) The above data are measurement value of typical sample, they are not guaranteed.
LM324xxx: -40°C to +85°C LM2902xxx: -40°C to 125°C

©2015 ROHM Co., Ltd. All rights reserved.

Downloaded from Arrow.com.

Typical Performance Curves - continued

○**LM324xxx, LM2902xxx**

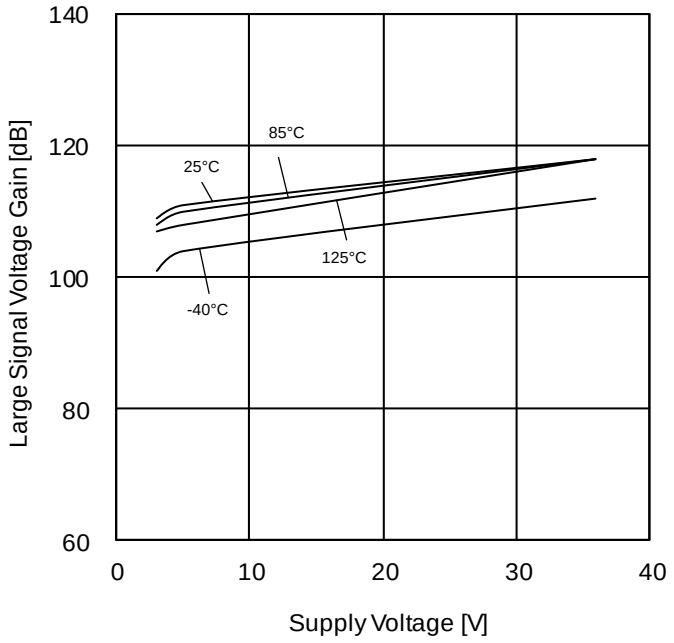

Figure 54. Large Signal Voltage Gain vs Supply Voltage (R_L=2kΩ)

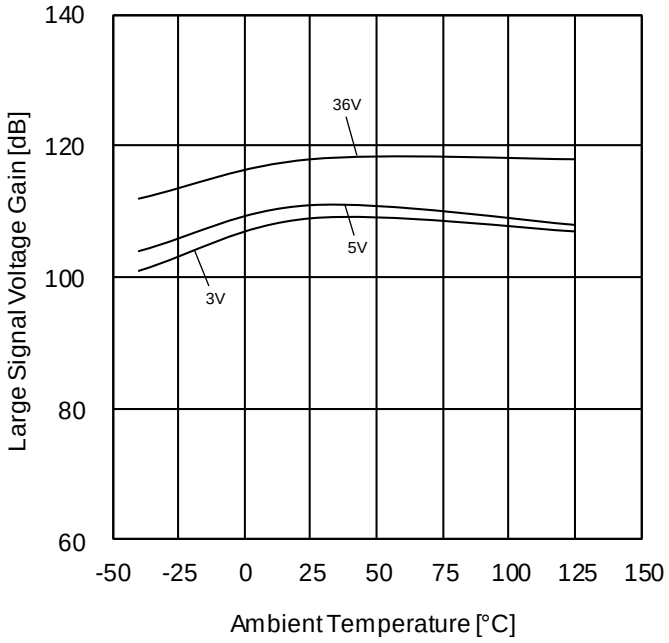

Figure 55. Large Signal Voltage Gain vs Ambient Temperature (R_L=2kΩ)

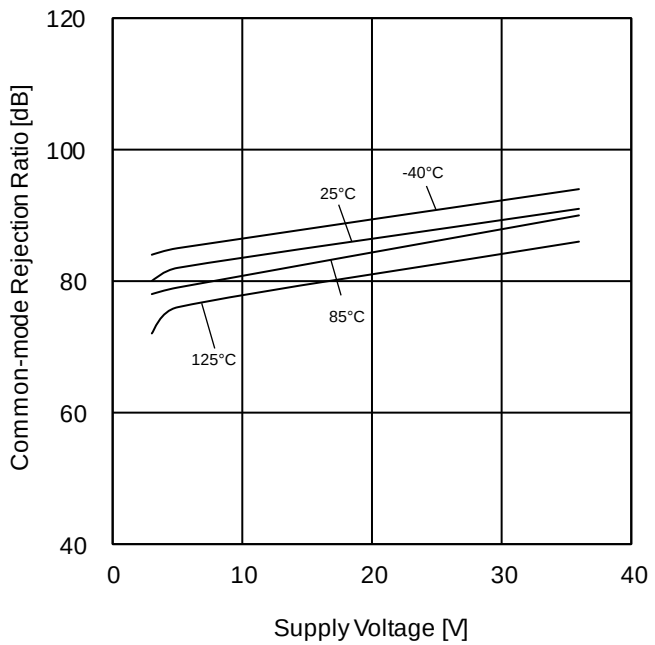

Figure 56. Common-mode Rejection Ratio vs Supply Voltage

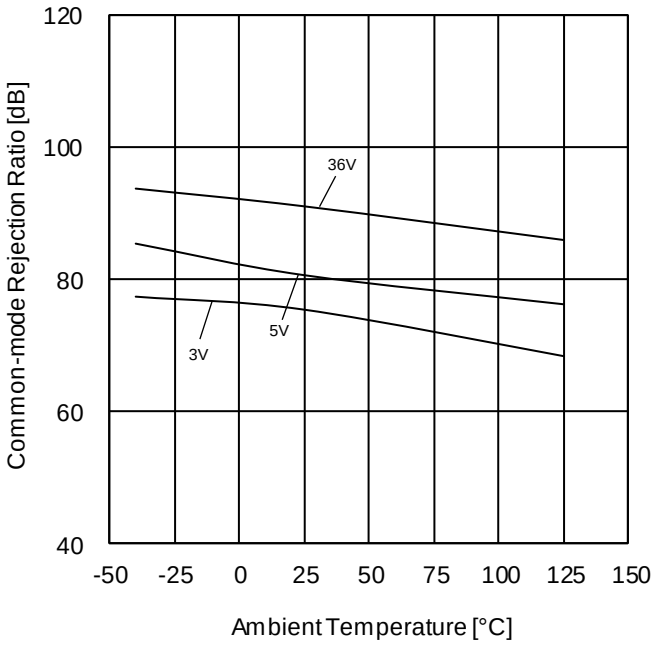

Figure 57. Common-mode Rejection Ratio vs Ambient Temperature

(*) The above data are measurement value of typical sample, they are not guaranteed.
LM324xxx: -40°C to +85°C LM2902xxx: -40°C to 125°C

©2015 ROHM Co., Ltd. All rights reserved.

Downloaded from Arrow.com.

Typical Performance Curves - continued

○LM324xxx, LM2902xxx

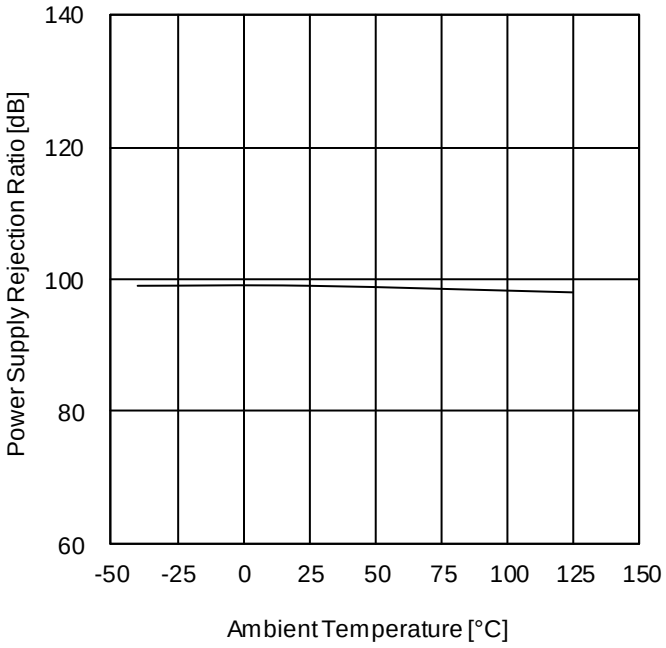

Figure 58. Power Supply Rejection Ratio vs Ambient Temperature

(*) The above data are measurement value of typical sample, they are not guaranteed.
LM324xxx: -40°C to +85°C LM2902xxx: -40°C to 125°C

©2015 ROHM Co., Ltd. All rights reserved.

Downloaded from Arrow.com.

Application Information

NULL method condition for Test Circuit 1

V_{CC}, V_{EE}, E_K, V_{ICM} Unit: V

Parameter	V_F	SW1	SW2	SW3	V_{CC}	V_{EE}	E_K	V_{ICM}	Calculation
Input Offset Voltage	V_{F1}	ON	ON	OFF	5 to 30	0	-1.4	0	1
Input Offset Current	V_{F2}	OFF	OFF	OFF	5	0	-1.4	0	2
Input Bias Current	V_{F3}	OFF	ON	OFF	5	0	-1.4	0	3
	V_{F4}	ON	OFF						
Large Signal Voltage Gain	V_{F5}	ON	ON	ON	15	0	-1.4	0	4
	V_{F6}						-11.4		
Common-mode Rejection Ratio (Input Common-mode Voltage Range)	V_{F7}	ON	ON	OFF	5	0	-1.4	0	5
	V_{F8}							3.5	
Power Supply Rejection Ratio	V_{F9}	ON	ON	OFF	5	0	-1.4	0	6
	V_{F10}				30				

- Calculation -

1. Input Offset Voltage (V_{IO})

$$V_{IO} = \frac{|V_{F1}|}{1 + R_F/R_S} \quad [V]$$

2. Input Offset Current (I_{IO})

$$I_{IO} = \frac{|V_{F2} - V_{F1}|}{R_I \times (1 + R_F/R_S)} \quad [A]$$

3. Input Bias Current (I_B)

$$I_B = \frac{|V_{F4} - V_{F3}|}{2 \times R_I \times (1 + R_F/R_S)} \quad [A]$$

4. Large Signal Voltage Gain (A_V)

$$A_V = 20\mathrm{Log}\frac{\Delta E_K \times (1+R_F/R_S)}{|V_{F6} - V_{F5}|} \quad [dB]$$

5. Common-mode Rejection Ratio (CMRR)

$$CMRR = 20\mathrm{Log}\frac{\Delta V_{ICM} \times (1+R_F/R_S)}{|V_{F8} - V_{F7}|} \quad [dB]$$

6. Power Supply Rejection Ratio (PSRR)

$$PSRR = 20\mathrm{Log}\frac{\Delta VCC \times (1+ R_F/R_S)}{|V_{F10} - V_{F9}|} \quad [dB]$$

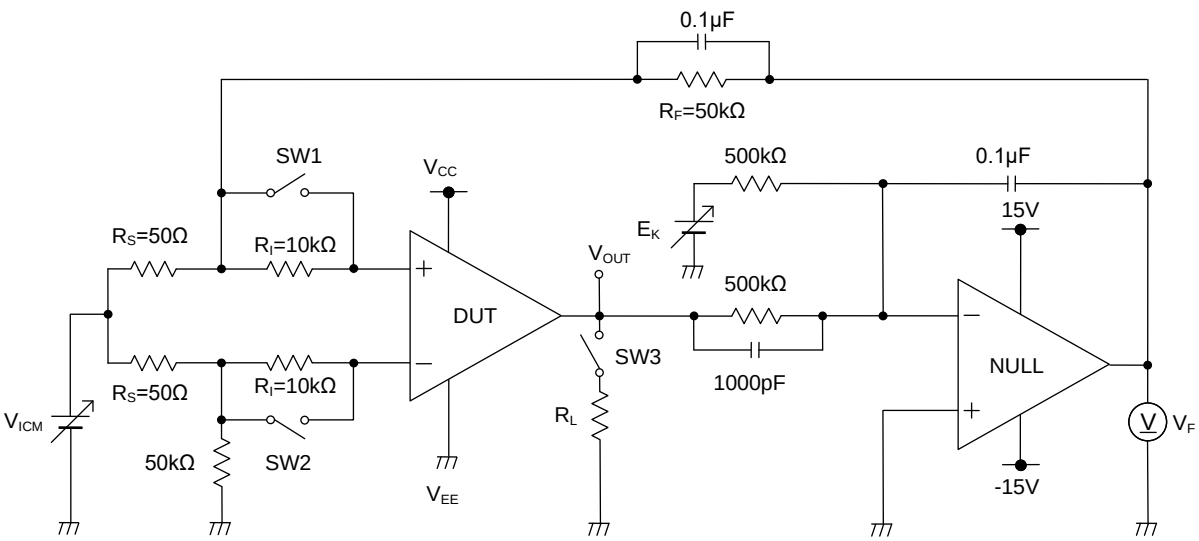

Figure 59. Test Circuit 1 (One Channel Only)

©2015 ROHM Co., Ltd. All rights reserved.

Downloaded from Arrow.com.

Application Information – continued

Switch Condition for Test Circuit 2

Parameter	SW1	SW2	SW3	SW4	SW5	SW6	SW7	SW8	SW9	SW10	SW11	SW12	SW13
Supply Current	OFF	OFF	OFF	ON	OFF	ON	OFF	OFF	OFF	OFF	OFF	OFF	OFF
Maximum Output Voltage(High)	OFF	OFF	ON	OFF	OFF	ON	OFF	OFF	ON	OFF	OFF	ON	OFF
Maximum Output Voltage(Low)	OFF	OFF	ON	OFF	OFF	ON	OFF	OFF	OFF	OFF	OFF	ON	OFF
Output Source Current	OFF	OFF	ON	OFF	OFF	ON	OFF	OFF	OFF	OFF	OFF	OFF	ON
Output Sink Current	OFF	OFF	ON	OFF	OFF	ON	OFF	OFF	OFF	OFF	OFF	OFF	ON
Slew Rate	OFF	OFF	OFF	ON	OFF	OFF	OFF	ON	ON	ON	OFF	OFF	OFF
Gain Bandwidth Product	OFF	ON	OFF	OFF	ON	ON	OFF	OFF	ON	ON	OFF	OFF	OFF
Input Referred Noise Voltage	ON	OFF	OFF	OFF	ON	ON	OFF	OFF	OFF	OFF	ON	OFF	OFF

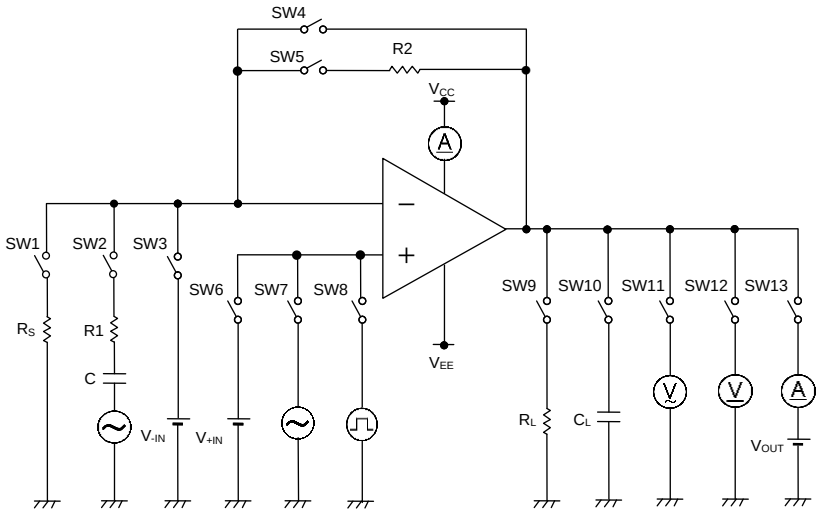

Figure 60. Test Circuit 2 (Each Op-Amp)

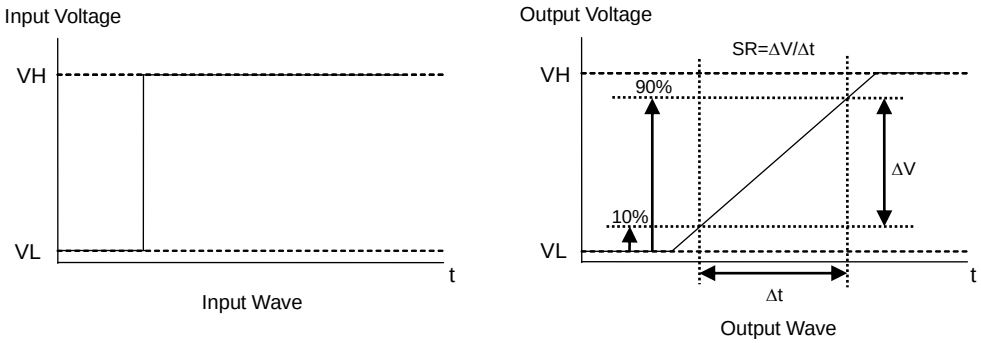

Figure 61. Slew Rate Input and Output Wave

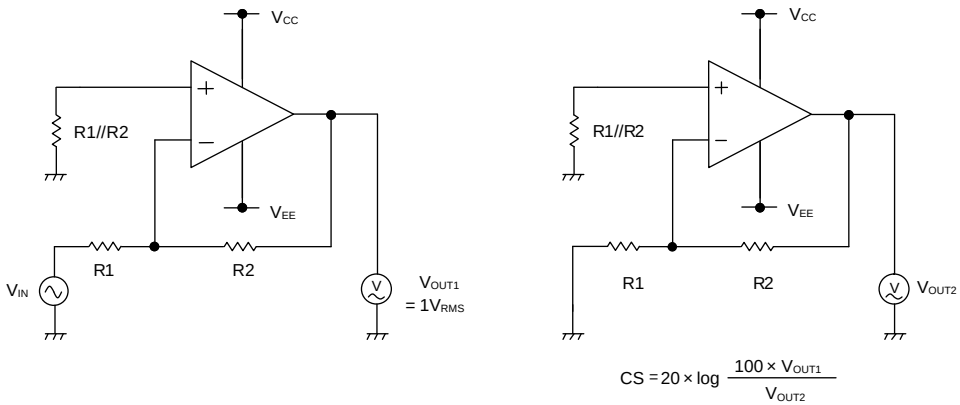

Figure 62. Test Circuit 3 (Channel Separation)
(R1=1kΩ,R2=100kΩ)

©2015 ROHM Co., Ltd. All rights reserved.

Downloaded from Arrow.com.

Application Information – continued

1. **Unused Circuits**
   It is recommended to apply the connection (see Figure 63) and set the non-inverting input pin at a potential within the Input Common-mode Voltage Range (V_{ICM}) for any unused circuit.

2. **Input Voltage**
   Regardless of the supply voltage, applying V_{EE}+36V to the input pin is possible without causing deterioration of the electrical characteristics or destruction. However, this does not ensure normal circuit operation. Please note that the circuit operates normally only when the input voltage is within the common mode input voltage range of the electric characteristics.

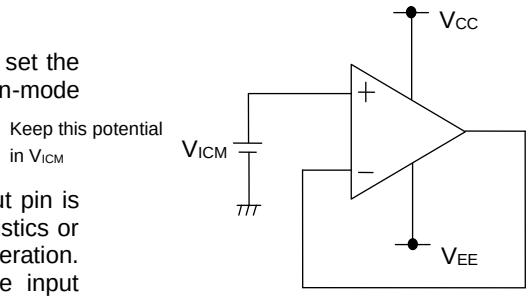

Figure 63. The Example of Application Circuit for Unused Op-amp

3. **Power Supply (Single/Dual)**
   The operational amplifiers operate when the voltage supplied is between VCC pin and VEE pin. Therefore, the single supply operational amplifiers can be used as dual supply operational amplifiers as well.

4. **IC Handling**
   When pressure is applied to the IC through warp on the printed circuit board, the characteristics may fluctuate due to the piezo effect. Be careful with the warp on the printed circuit board.

5. **The IC Destruction Caused by Capacitive Load**
   The IC may be damaged when VCC pin and VEE pin is shorted with the charged output pin capacitor. When IC is used as an operational amplifier or as an application circuit where oscillation is not activated by an output capacitor, output capacitor must be kept below 0.1µF in order to prevent the damage mentioned above.

I/O Equivalent Circuit

Symbol	Pin No.	Equivalent Circuit
+IN -IN	LM358xxx, LM2904xxx: 2,3,5,6 LM324xxx, LM2902xxx: 2,3,5,6,9,10,12,13	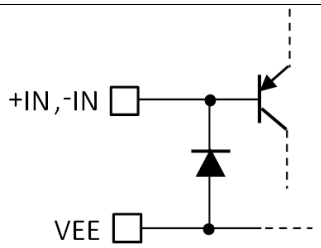
OUT	LM358xxx, LM2904xxx: 1,7 LM324xxx, LM2902xxx: 1,7,8,14	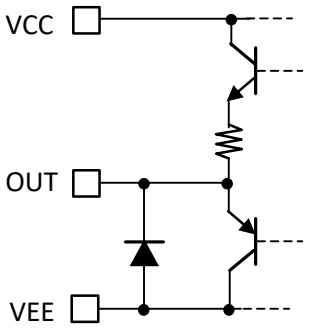
VCC	LM358xxx, LM2904xxx: 8 LM324xxx, LM2902xxx: 4	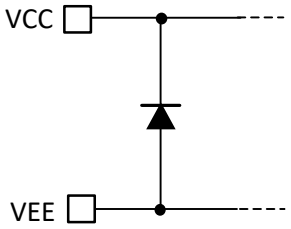

©2015 ROHM Co., Ltd. All rights reserved.

Downloaded from Arrow.com.

Examples of Circuit

○Voltage Follower

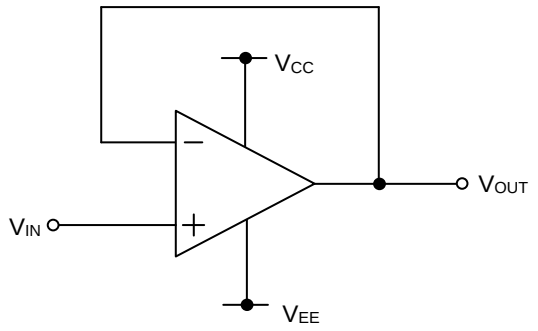

Figure 64. Voltage Follower Circuit

Voltage gain is 0dB.

Using this circuit, the output voltage (V_{OUT}) is configured to be equal to the input voltage (V_{IN}). This circuit also stabilizes the output voltage (V_{OUT}) due to high input impedance and low output impedance. Computation for output voltage (V_{OUT}) is shown below.

$V_{OUT}=V_{IN}$

○Inverting Amplifier

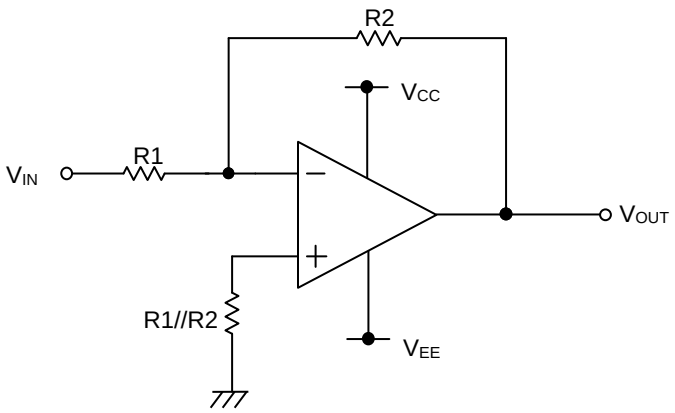

Figure 65. Inverting Amplifier Circuit

For inverting amplifier, input voltage (V_{IN}) is amplified by a voltage gain and depends on the ratio of R1 and R2. The out-of-phase output voltage is shown in the next expression

$V_{OUT}=-(R2/R1) \cdot V_{IN}$

This circuit has input impedance equal to R1.

○Non-inverting Amplifier

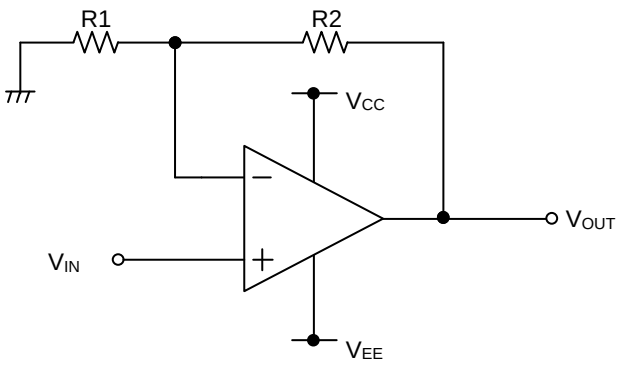

Figure 66. Non-inverting Amplifier Circuit

For non-inverting amplifier, input voltage (V_{IN}) is amplified by a voltage gain, which depends on the ratio of R1 and R2. The output voltage (V_{OUT}) is in-phase with the input voltage (V_{IN}) and is shown in the next expression.

$V_{OUT}=(1 + R2/R1) \cdot V_{IN}$

Effectively, this circuit has high input impedance since its input side is the same as that of the operational amplifier.

©2015 ROHM Co., Ltd. All rights reserved.

Downloaded from Arrow.com.

Power Dissipation

Power dissipation (total loss) indicates the power that the IC can consume at T_A=25°C (normal temperature). As the IC consumes power, it heats up, causing its temperature to rise above the ambient temperature. The allowable temperature that the IC can accept is limited. This depends on the circuit configuration, manufacturing process, and consumable power.
Power dissipation is determined by the allowable temperature within the IC (maximum junction temperature) and the thermal resistance of the package used (heat dissipation capability). Maximum junction temperature is typically equal to the maximum storage temperature. The heat generated through the consumption of power by the IC radiates from the mold resin or lead frame of the package. Thermal resistance, represented by the symbol θ_{JA}°C/W, indicates this heat dissipation capability. Similarly, the temperature of an IC inside its package can be estimated by thermal resistance.
Figure 67(a) shows the model of the thermal resistance of a package. The equation below shows how to compute for the Thermal resistance (θ_{JA}), given the ambient temperature (T_A), maximum junction temperature (T_{jmax}), and power dissipation (P_D).

$$\theta_{JA} = (T_{jmax} - T_A) / P_D \quad °C/W$$

The Derating Curve in Figure 67(b) indicates the power that the IC can consume with reference to ambient temperature. Power consumption of the IC begins to attenuate at certain temperatures. This gradient is determined by Thermal resistance (θ_{JA}), which depends on the chip size, power consumption, package, ambient temperature, package condition, wind velocity, etc. This may also vary even when the same of package is used. Thermal reduction curve indicates a reference value measured at a specified condition. Figures 67(c) to (f) show the examples of derating curves for LM358xxx, LM2904xxx, LM324xxx, and LM2902xxx respectively.

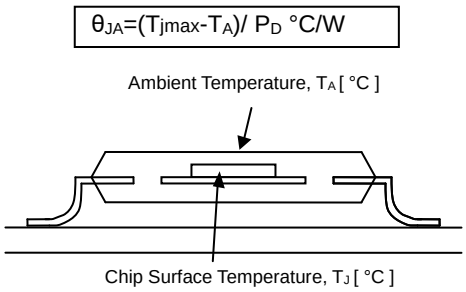

(a) Thermal Resistance

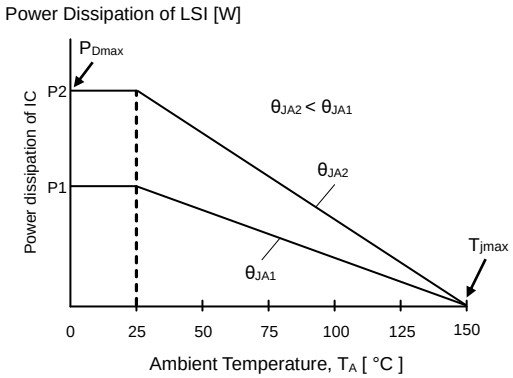

(b) Derating Curve

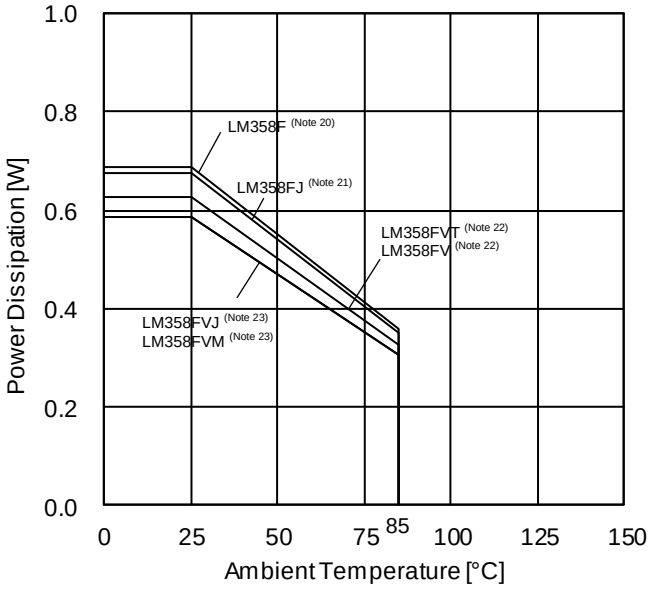

(c) LM358xxx

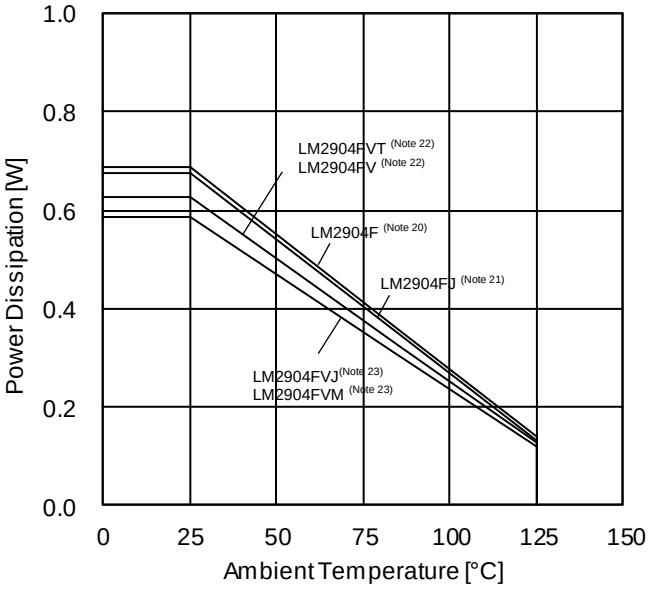

(d) LM2904xxx

©2015 ROHM Co., Ltd. All rights reserved.

Downloaded from Arrow.com.

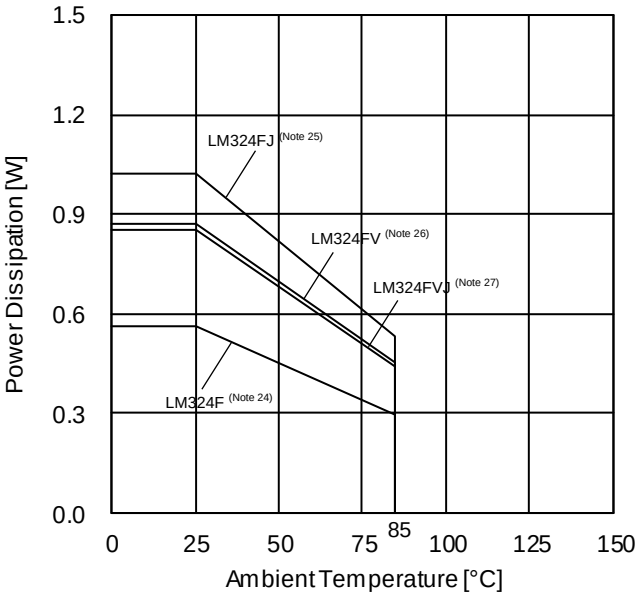

(e) LM324xxx

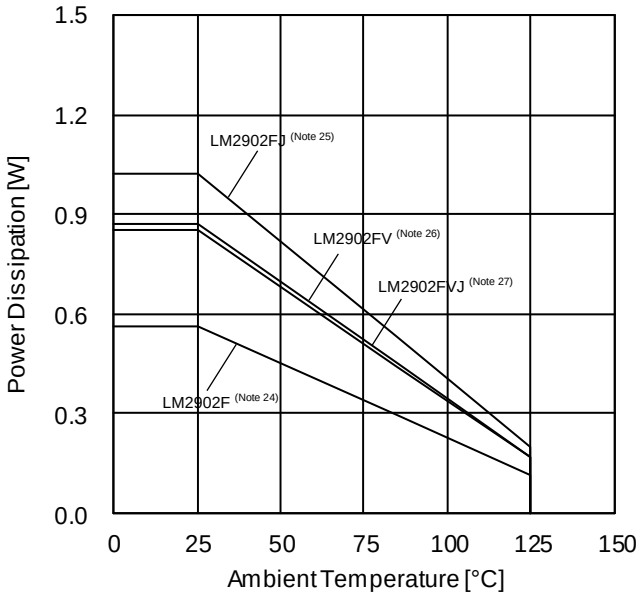

(f) LM2902xxx

Note 20	Note 21	Note 22	Note 23	Note 24	Note 25	Note 26	Note 27	Unit
5.5	5.4	5.0	4.7	4.5	8.2	7.0	6.8	mW/°C

When using the unit above T_A=25°C, subtract the value above per Celsius degree.
Power dissipation is the value when FR4 glass epoxy board 70mm × 70mm × 1.6mm (copper foil area below 3%) is mounted.

Figure 67. Thermal Resistance and Derating Curve

©2015 ROHM Co., Ltd. All rights reserved.

Downloaded from Arrow.com.

Operational Notes

1. **Reverse Connection of Power Supply**
   Connecting the power supply in reverse polarity can damage the IC. Take precautions against reverse polarity when connecting the power supply, such as mounting an external diode between the power supply and the IC's power supply pins.

2. **Power Supply Lines**
   Design the PCB layout pattern to provide low impedance supply lines. Separate the ground and supply lines of the digital and analog blocks to prevent noise in the ground and supply lines of the digital block from affecting the analog block. Furthermore, connect a capacitor to ground at all power supply pins. Consider the effect of temperature and aging on the capacitance value when using electrolytic capacitors.

3. **Ground Voltage**
   Ensure that no pins are at a voltage below that of the ground pin at any time, even during transient condition.

4. **Ground Wiring Pattern**
   When using both small-signal and large-current ground traces, the two ground traces should be routed separately but connected to a single ground at the reference point of the application board to avoid fluctuations in the small-signal ground caused by large currents. Also ensure that the ground traces of external components do not cause variations on the ground voltage. The ground lines must be as short and thick as possible to reduce line impedance.

5. **Thermal Consideration**
   Should by any chance the power dissipation rating be exceeded the rise in temperature of the chip may result in deterioration of the properties of the chip. The absolute maximum rating of the P_D stated in this specification is when the IC is mounted on a 70mm x 70mm x 1.6mm glass epoxy board. In case of exceeding this absolute maximum rating, increase the board size and copper area to prevent exceeding the P_D rating.

6. **Recommended Operating Conditions**
   These conditions represent a range within which the expected characteristics of the IC can be approximately obtained. The electrical characteristics are guaranteed under the conditions of each parameter.

7. **In-rush Current**
   When power is first supplied to the IC, it is possible that the internal logic may be unstable and inrush current may flow instantaneously due to the internal powering sequence and delays, especially if the IC has more than one power supply. Therefore, give special consideration to power coupling capacitance, power wiring, width of ground wiring, and routing of connections.

8. **Operation Under Strong Electromagnetic Field**
   Operating the IC in the presence of a strong electromagnetic field may cause the IC to malfunction.

9. **Testing on Application Boards**
   When testing the IC on an application board, connecting a capacitor directly to a low-impedance output pin may subject the IC to stress. Always discharge capacitors completely after each process or step. The IC's power supply should always be turned off completely before connecting or removing it from the test setup during the inspection process. To prevent damage from static discharge, ground the IC during assembly and use similar precautions during transport and storage.

10. **Inter-pin Short and Mounting Errors**
    Ensure that the direction and position are correct when mounting the IC on the PCB. Incorrect mounting may result in damaging the IC. Avoid nearby pins being shorted to each other especially to ground, power supply and output pin. Inter-pin shorts could be due to many reasons such as metal particles, water droplets (in very humid environment) and unintentional solder bridge deposited in between pins during assembly to name a few.

©2015 ROHM Co., Ltd. All rights reserved.

Downloaded from Arrow.com.

Operational Notes – continued

11. Regarding the Input Pin of the IC

This monolithic IC contains P+ isolation and P substrate layers between adjacent elements in order to keep them isolated. P-N junctions are formed at the intersection of the P layers with the N layers of other elements, creating a parasitic diode or transistor. For example (refer to figure below):

When GND > Pin A and GND > Pin B, the P-N junction operates as a parasitic diode.
When GND > Pin B, the P-N junction operates as a parasitic transistor.

Parasitic diodes inevitably occur in the structure of the IC. The operation of parasitic diodes can result in mutual interference among circuits, operational faults, or physical damage. Therefore, conditions that cause these diodes to operate, such as applying a voltage lower than the GND voltage to an input pin (and thus to the P substrate) should be avoided.

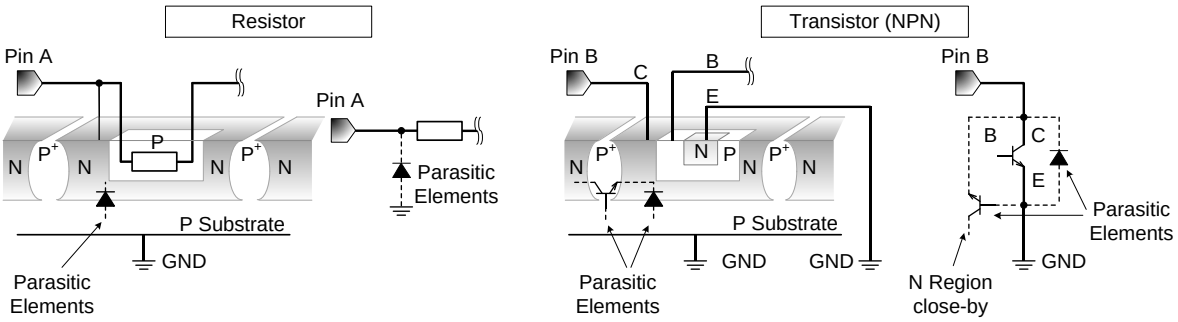

Figure 68. Example of monolithic IC structure

©2015 ROHM Co., Ltd. All rights reserved.

Downloaded from Arrow.com.

Physical Dimensions, Tape and Reel Information

Package Name	SOP8

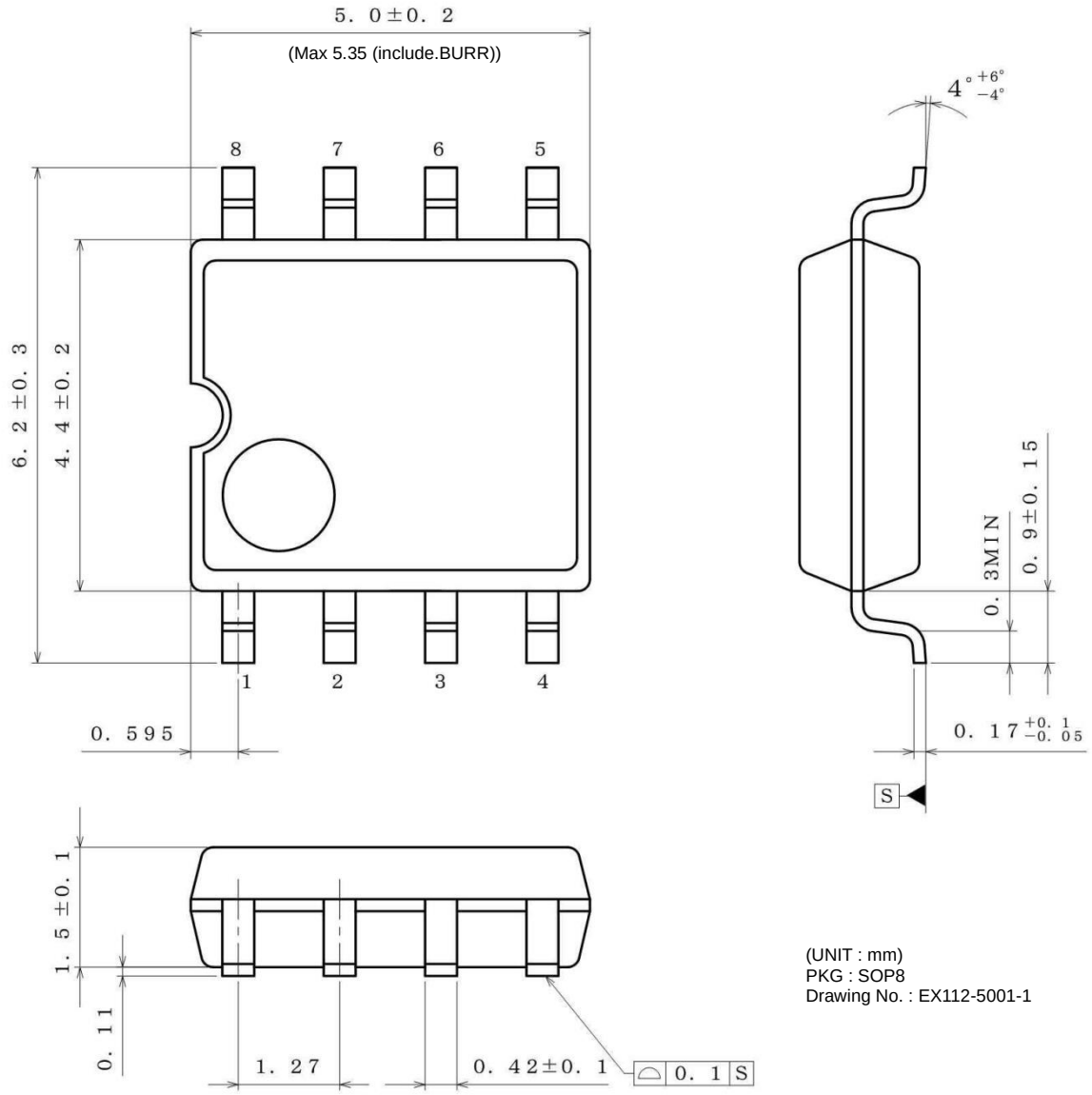

(UNIT : mm)
PKG : SOP8
Drawing No. : EX112-5001-1

<Tape and Reel information>

Tape	Embossed carrier tape
Quantity	2500pcs
Direction of feed	E2 (The direction is the 1pin of product is at the upper left when you hold reel on the left hand and you pull out the tape on the right hand)

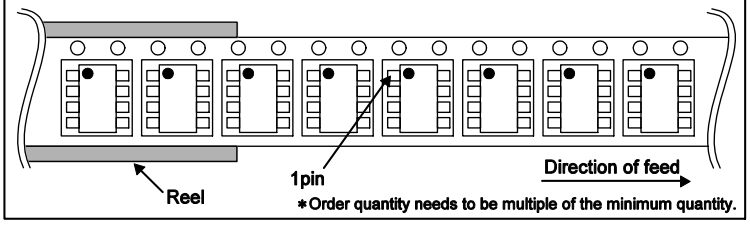

∗Order quantity needs to be multiple of the minimum quantity.

©2015 ROHM Co., Ltd. All rights reserved.

Downloaded from Arrow.com.

Physical Dimensions, Tape and Reel Information – continued

Package Name	SOP-J8

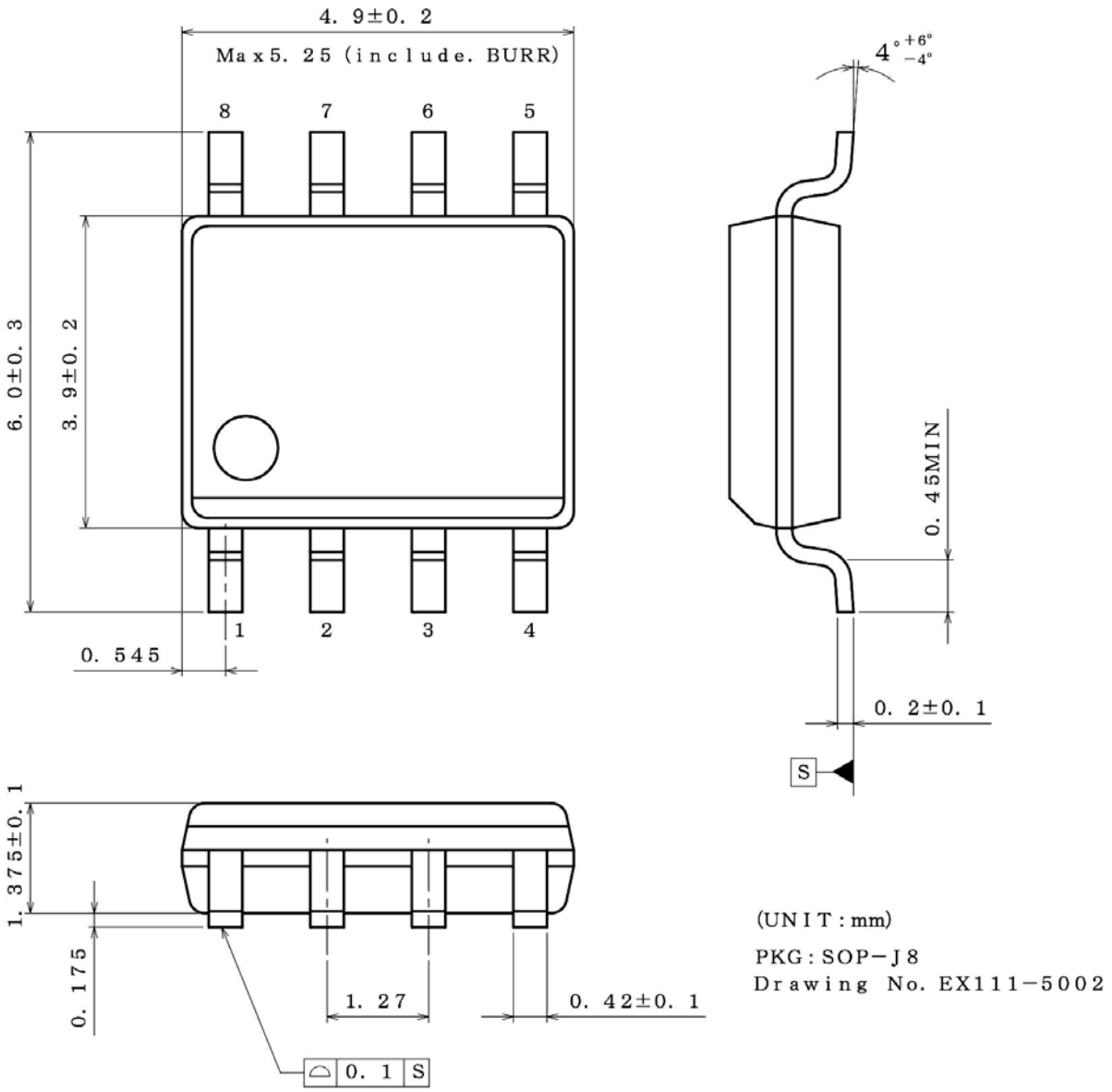

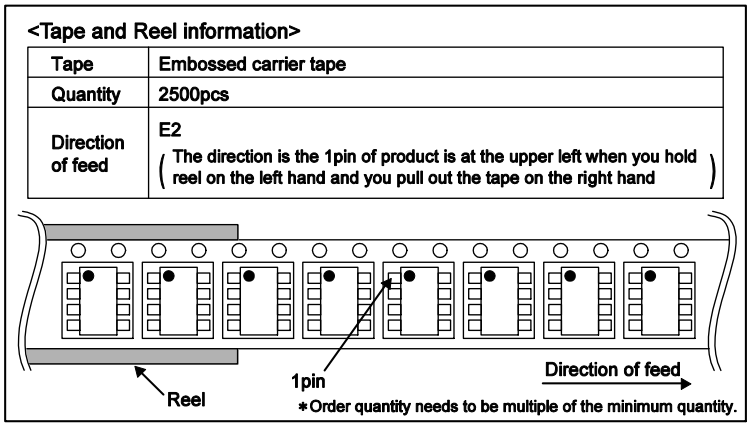

©2015 ROHM Co., Ltd. All rights reserved.

Downloaded from Arrow.com.

Physical Dimensions, Tape and Reel Information – continued

Package Name	SSOP-B8

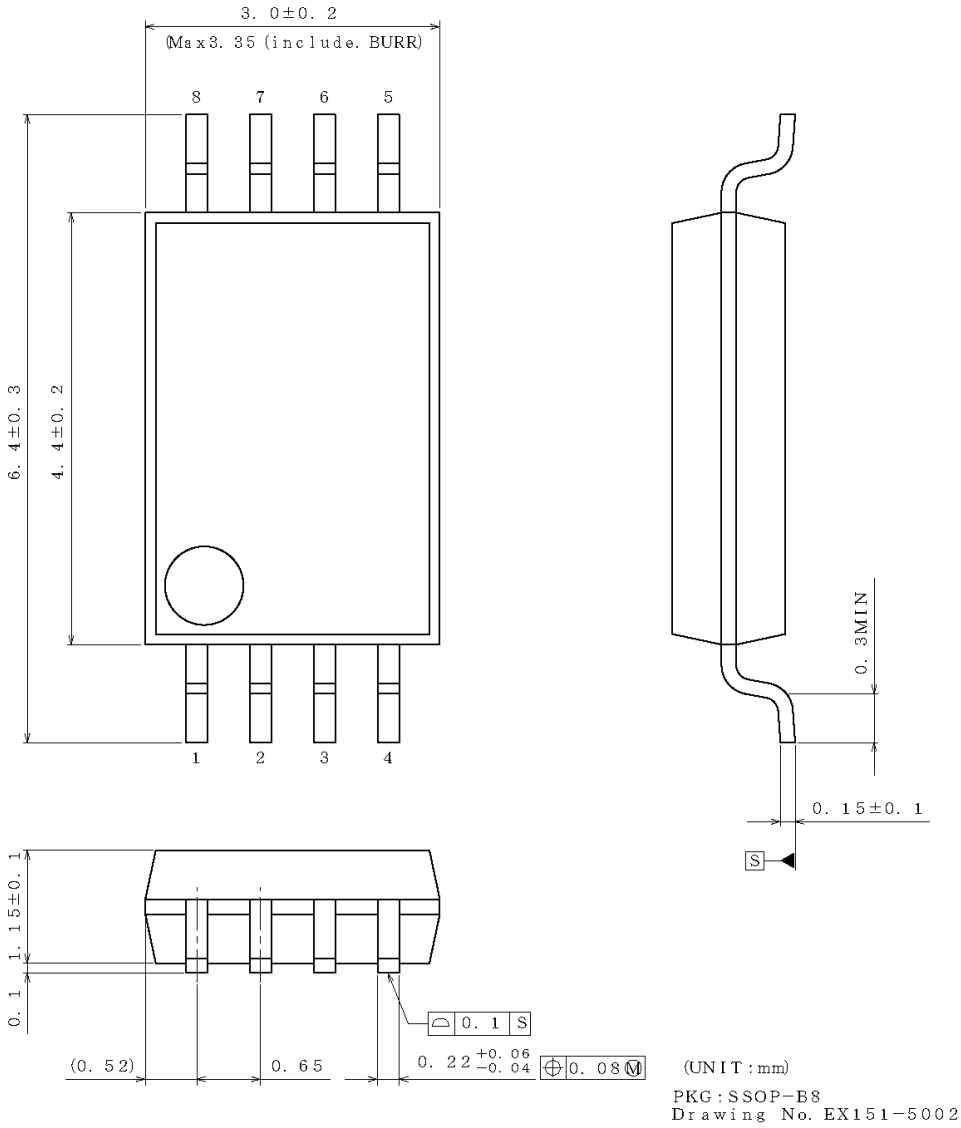

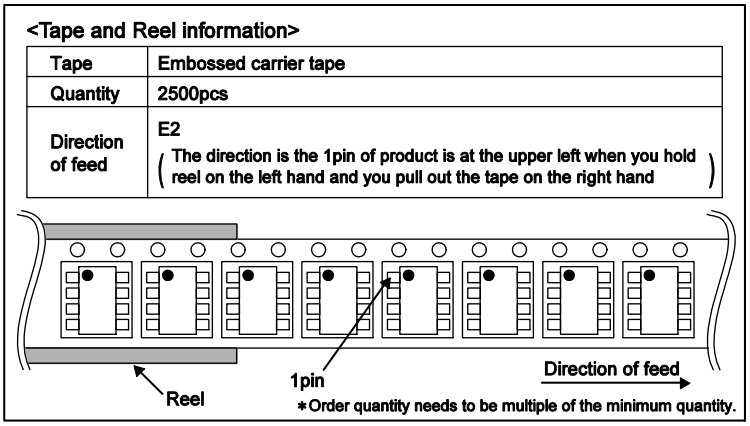

©2015 ROHM Co., Ltd. All rights reserved.

Downloaded from Arrow.com.

Physical Dimensions, Tape and Reel Information – continued

Package Name	TSSOP-B8

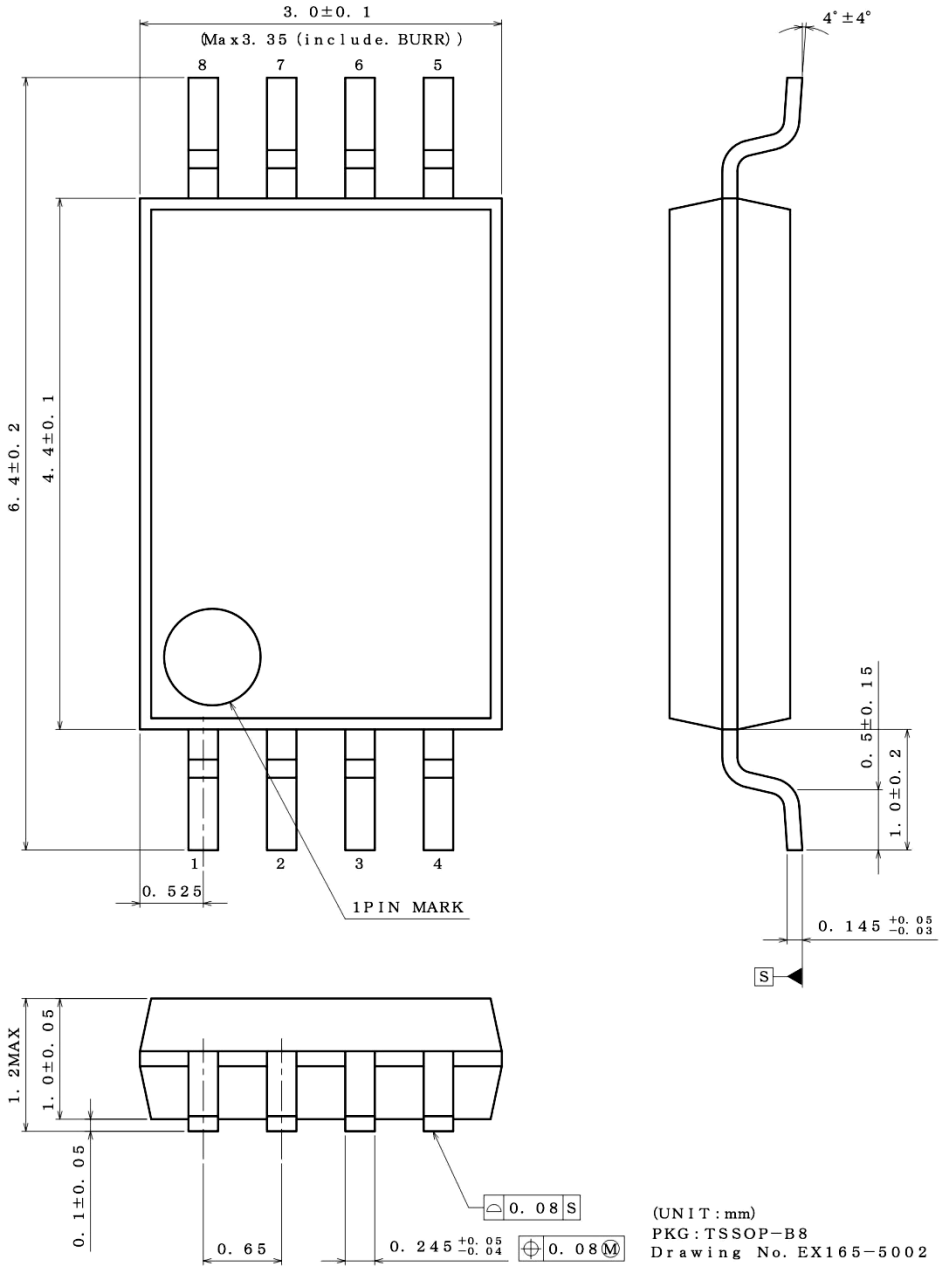

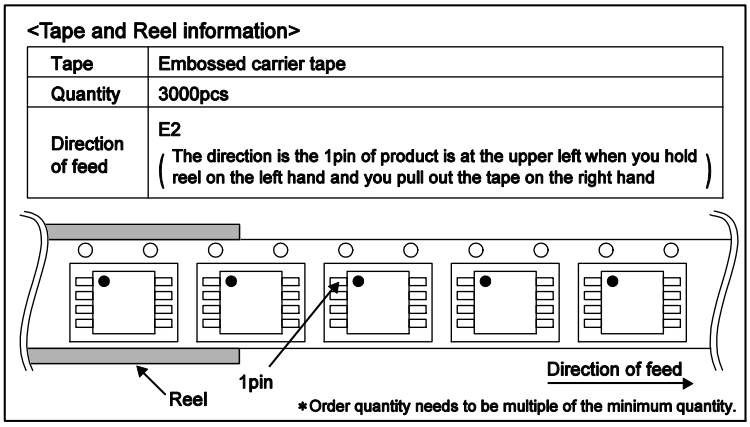

©2015 ROHM Co., Ltd. All rights reserved.

Downloaded from Arrow.com.

Physical Dimensions, Tape and Reel Information – continued

Package Name	TSSOP-B8J

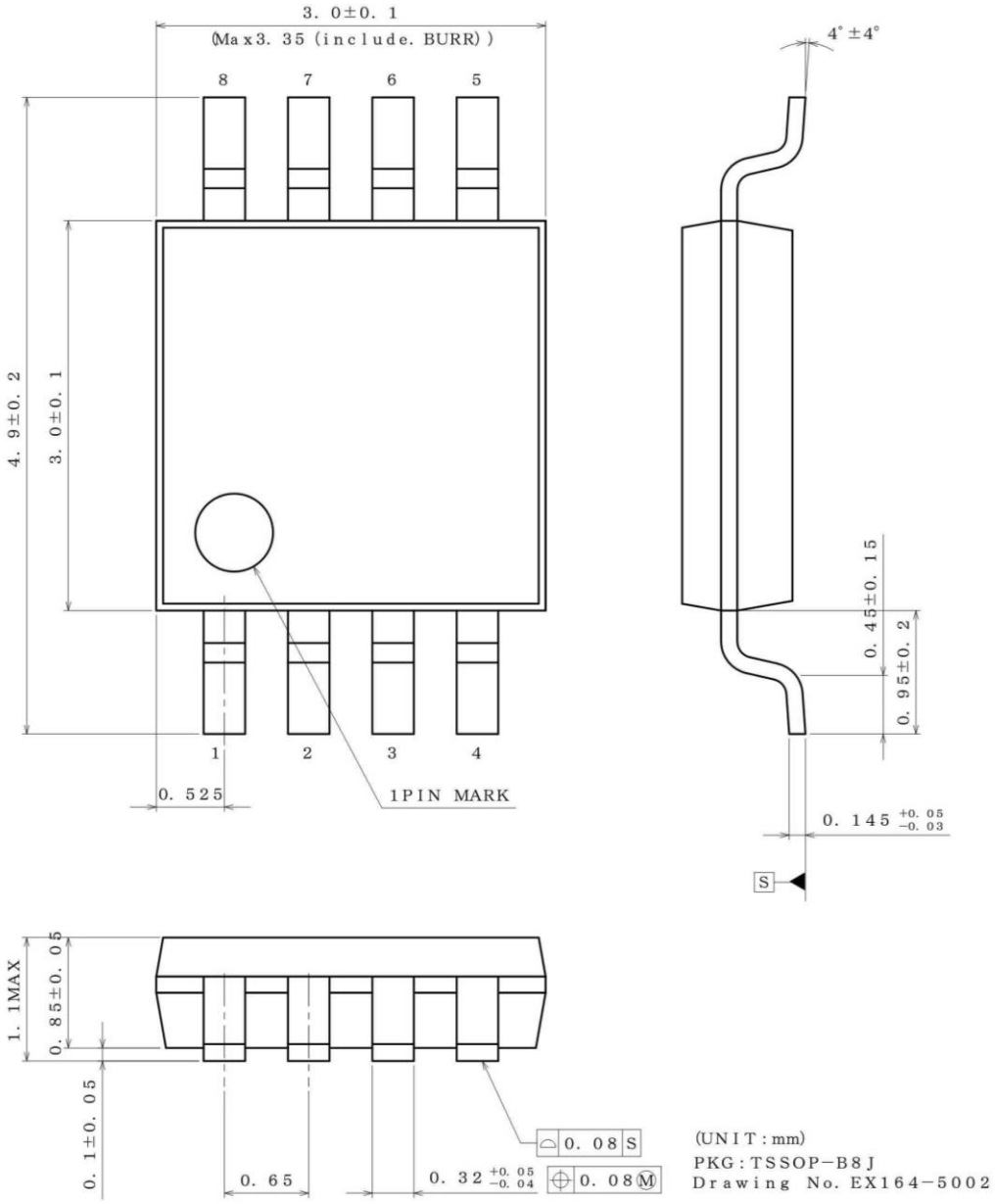

<Tape and Reel information>

Tape	Embossed carrier tape
Quantity	2500pcs
Direction of feed	E2 (The direction is the 1pin of product is at the upper left when you hold reel on the left hand and you pull out the tape on the right hand)

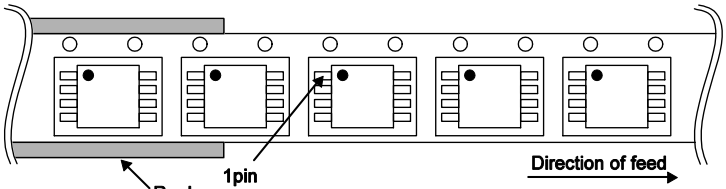

∗Order quantity needs to be multiple of the minimum quantity.

©2015 ROHM Co., Ltd. All rights reserved.

Downloaded from Arrow.com.

Physical Dimensions, Tape and Reel Information – continued

Package Name	MSOP8

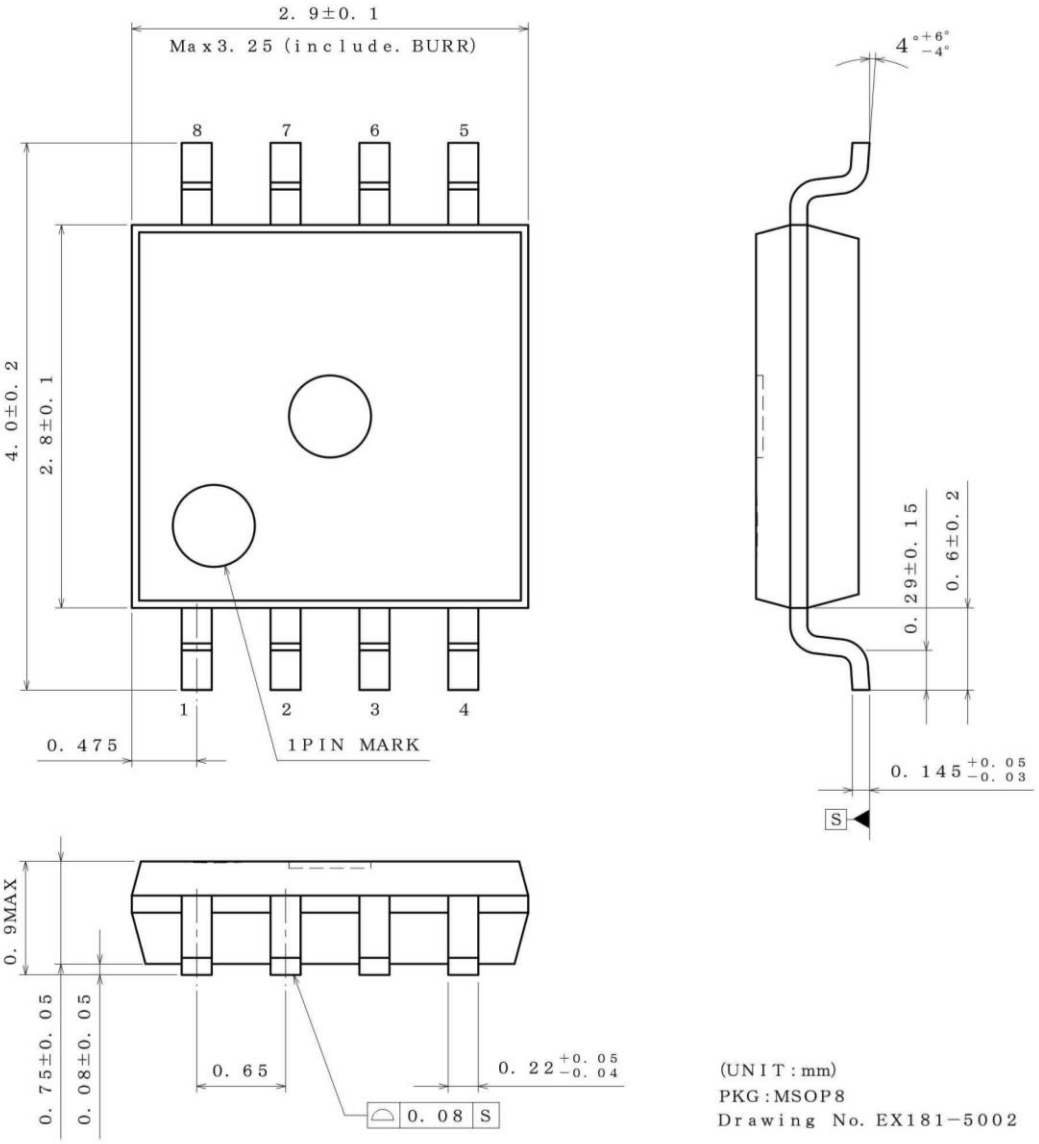

<Tape and Reel information>

Tape	Embossed carrier tape
Quantity	3000pcs
Direction of feed	TR (The direction is the 1pin of product is at the upper right when you hold reel on the left hand and you pull out the tape on the right hand)

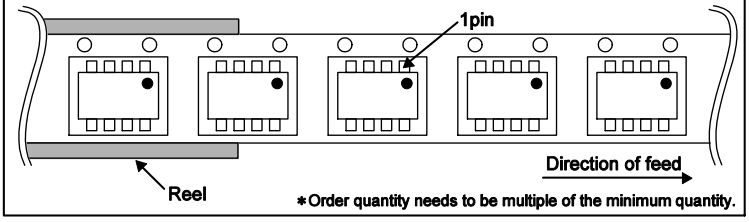

*Order quantity needs to be multiple of the minimum quantity.

©2015 ROHM Co., Ltd. All rights reserved.

Downloaded from Arrow.com.

Physical Dimensions, Tape and Reel Information – continued

Package Name	SOP14

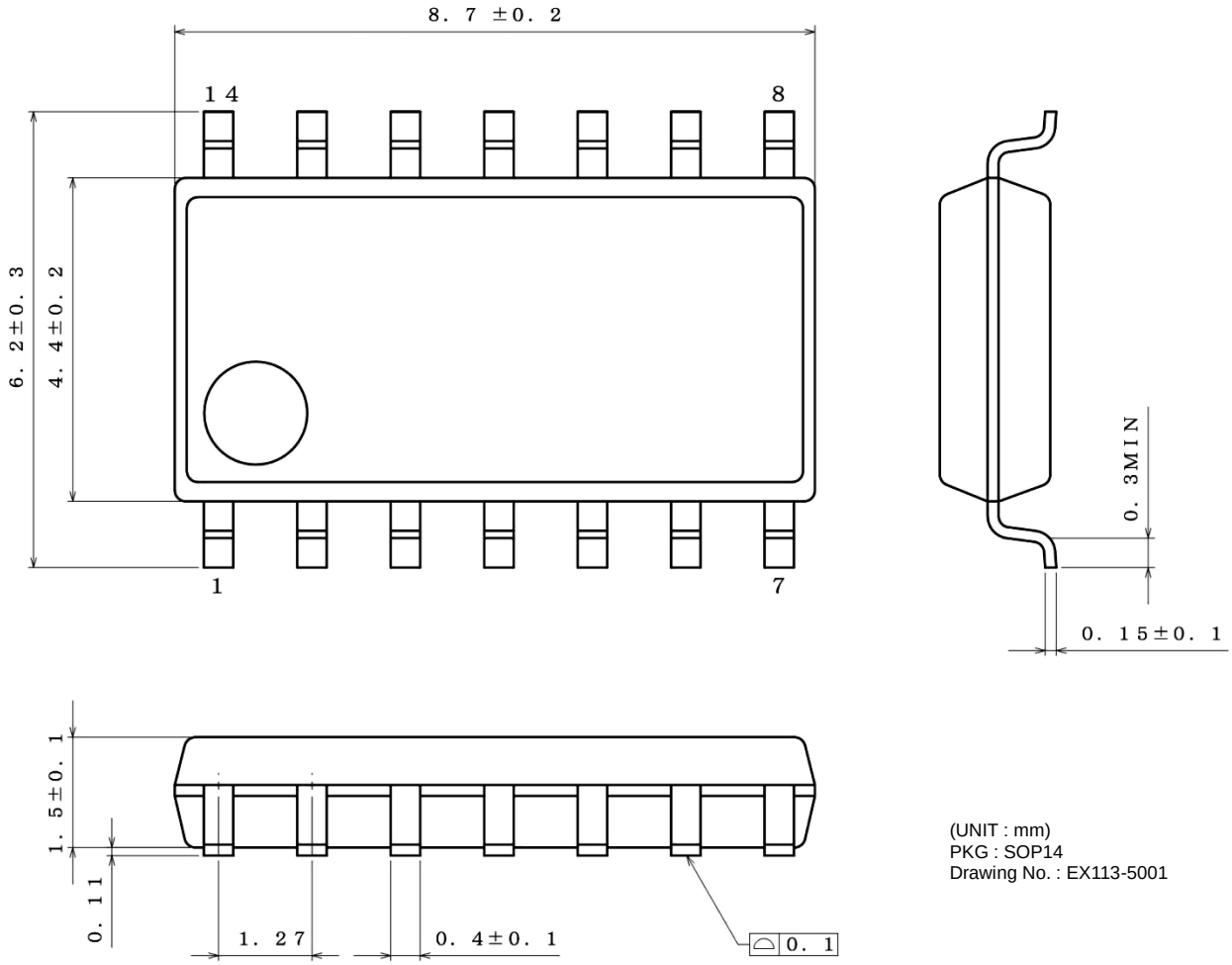

(UNIT : mm)
PKG : SOP14
Drawing No. : EX113-5001

<Tape and Reel information>

Tape	Embossed carrier tape
Quantity	2500pcs
Direction of feed	E2 (The direction is the 1pin of product is at the upper left when you hold reel on the left hand and you pull out the tape on the right hand)

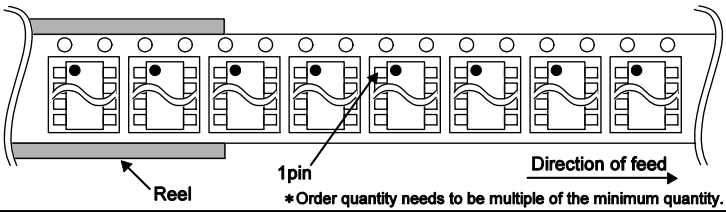

∗Order quantity needs to be multiple of the minimum quantity.

©2015 ROHM Co., Ltd. All rights reserved.

Downloaded from Arrow.com.

Physical Dimensions, Tape and Reel Information – continued

Package Name	SOP-J14

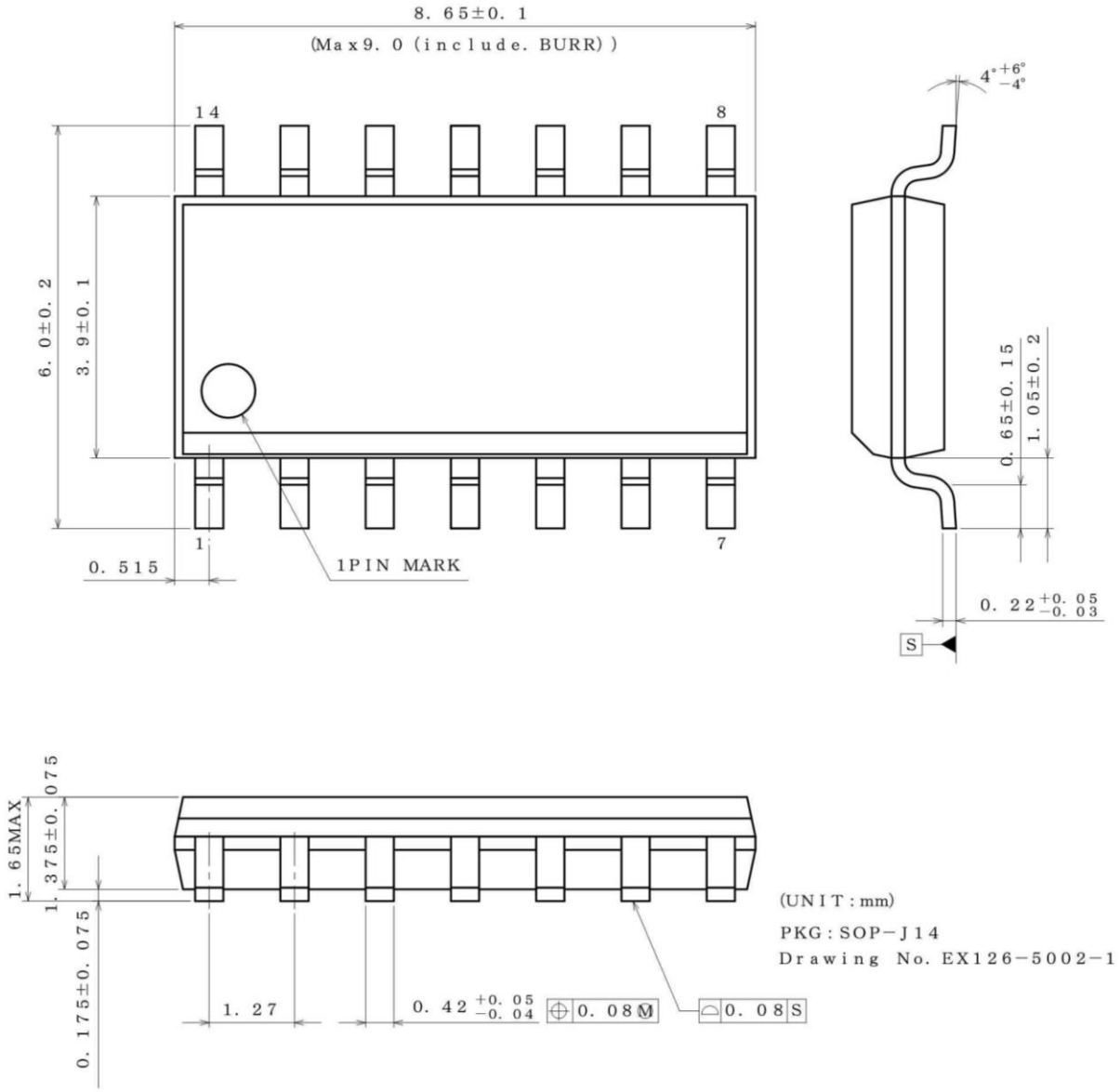

<Tape and Reel information>

Tape	Embossed carrier tape
Quantity	2500pcs
Direction of feed	E2 (The direction is the 1pin of product is at the upper left when you hold reel on the left hand and you pull out the tape on the right hand)

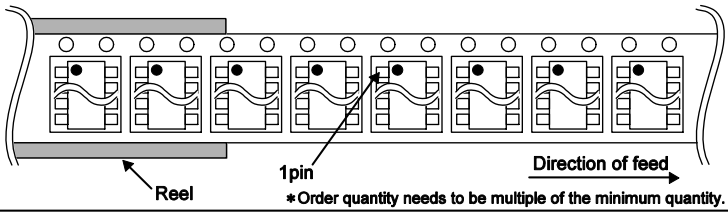

*Order quantity needs to be multiple of the minimum quantity.

©2015 ROHM Co., Ltd. All rights reserved.

Downloaded from Arrow.com.

Physical Dimensions, Tape and Reel Information – continued

Package Name	SSOP-B14

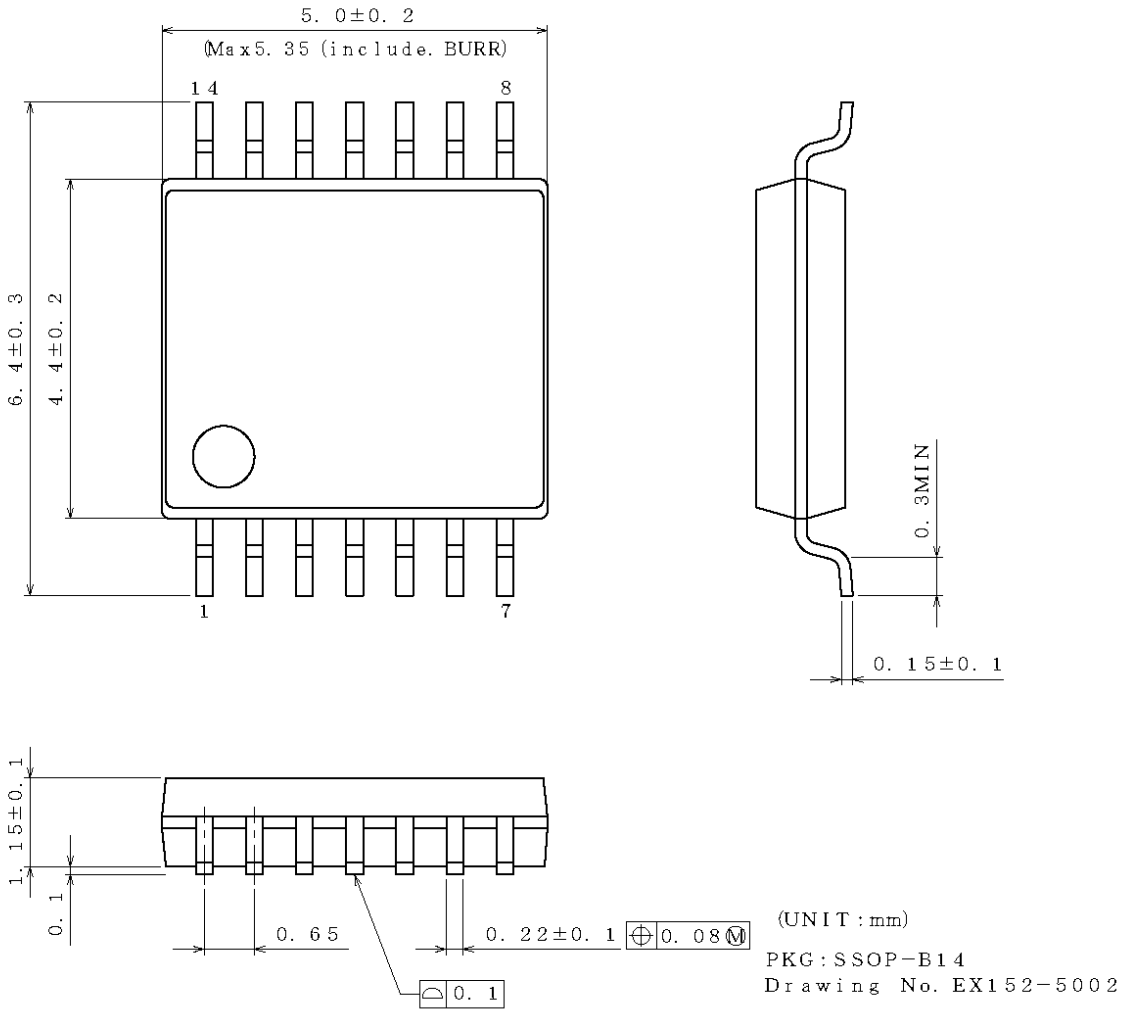

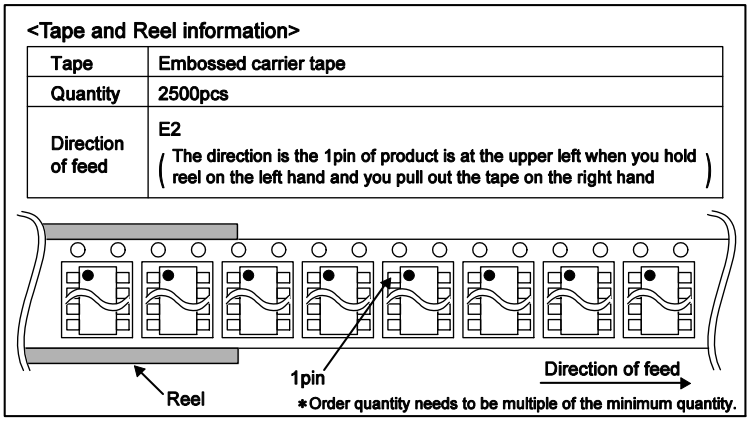

©2015 ROHM Co., Ltd. All rights reserved.

Downloaded from Arrow.com.

Physical Dimensions, Tape and Reel Information – continued

Package Name	TSSOP-B14J

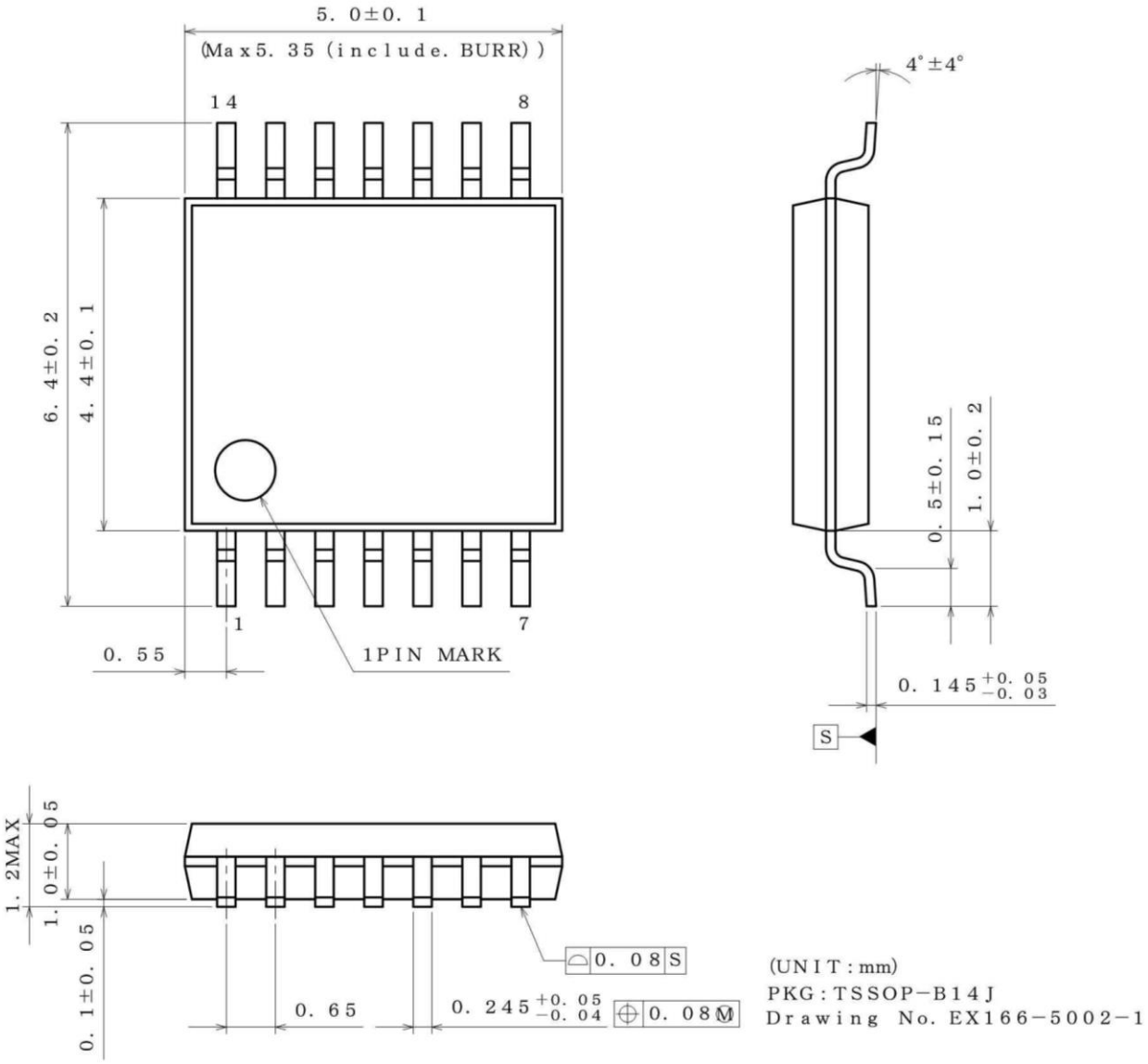

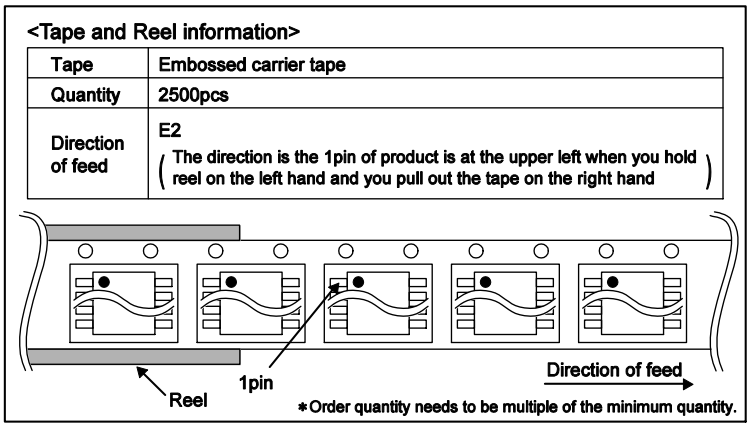

©2015 ROHM Co., Ltd. All rights reserved.

Downloaded from Arrow.com.

Ordering Information

L M x x x x x x - x x

Part Number
LM358F
LM358FJ
LM358FV
LM358FVT
LM358FVJ
LM358FVM
LM324F
LM324FJ
LM324FV
LM324FVJ
LM2904F
LM2904FJ
LM2904FV
LM2904FVT
LM2904FVJ
LM2904FVM
LM2902F
LM2902FJ
LM2902FV
LM2902FVJ

Package
F : SOP8
: SOP14
FJ : SOP-J8
: SOP-J14
FV : SSOP-B8
: SSOP-B14
FVT : TSSOP-B8
FVJ : TSSOP-B8J
: TSSOP-B14J
FVM : MSOP8

Packaging and forming specification
E2: Embossed tape and reel
(SOP8/SOP-J8/SSOP-B8/
TSSOP-B8/ SOP14/SOP-J14/
SSOP-B14/TSSOP-B14J)
TR: Embossed tape and reel
(MSOP8)

Line-up

Operating Temperature Range	Channel	Package		Orderable Part Number
-40°C to +85°C	2ch	SOP8	Reel of 2500	LM358F-E2
		SOP-J8	Reel of 2500	LM358FJ-E2
		SSOP-B8	Reel of 2500	LM358FV-E2
		TSSOP-B8	Reel of 3000	LM358FVT-E2
		TSSOP-B8J	Reel of 2500	LM358FVJ-E2
		MSOP8	Reel of 3000	LM358FVM-TR
	4ch	SOP14	Reel of 2500	LM324F-E2
		SOP-J14	Reel of 2500	LM324FJ-E2
		SSOP-B14	Reel of 2500	LM324FV-E2
		TSSOP-B14J	Reel of 2500	LM324FVJ-E2
-40°C to +125°C	2ch	SOP8	Reel of 2500	LM2904F-E2
		SOP-J8	Reel of 2500	LM2904FJ-E2
		SSOP-B8	Reel of 2500	LM2904FV-E2
		TSSOP-B8	Reel of 3000	LM2904FVT-E2
		TSSOP-B8J	Reel of 2500	LM2904FVJ-E2
		MSOP8	Reel of 3000	LM2904FVM-TR
	4ch	SOP14	Reel of 2500	LM2902F-E2
		SOP-J14	Reel of 2500	LM2902FJ-E2
		SSOP-B14	Reel of 2500	LM2902FV-E2
		TSSOP-B14J	Reel of 2500	LM2902FVJ-E2

©2015 ROHM Co., Ltd. All rights reserved.

Downloaded from Arrow.com.

Marking Diagram

SOP8(TOP VIEW)

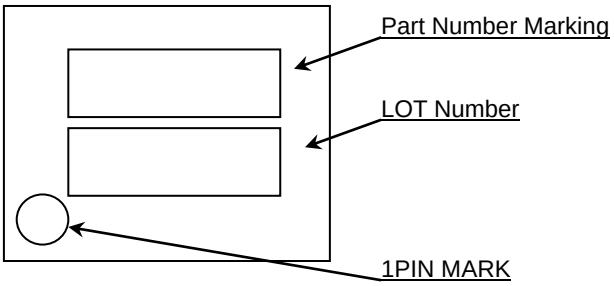

SOP-J8(TOP VIEW)

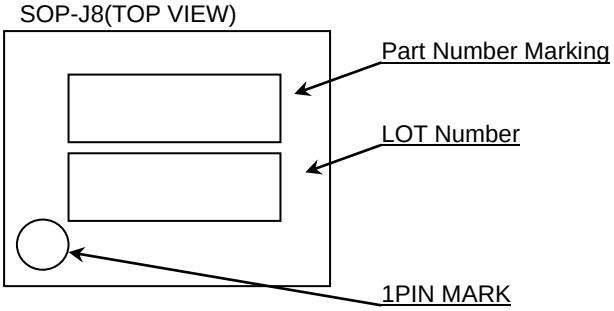

TSSOP-B8(TOP VIEW)

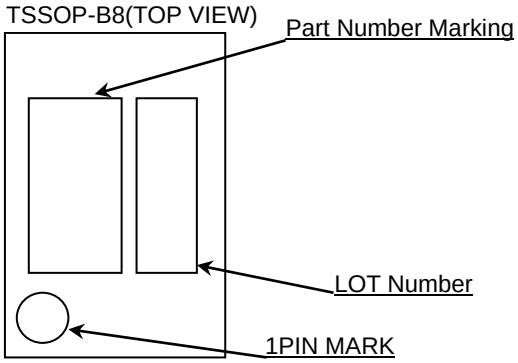

SSOP-B8(TOP VIEW)

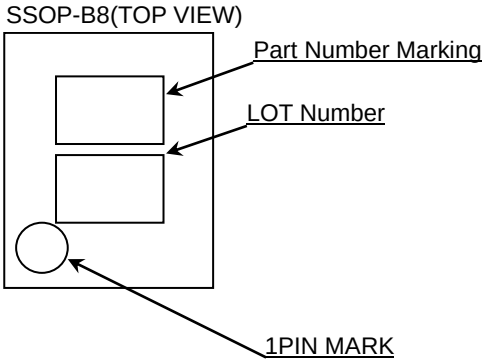

SOP14(TOP VIEW)

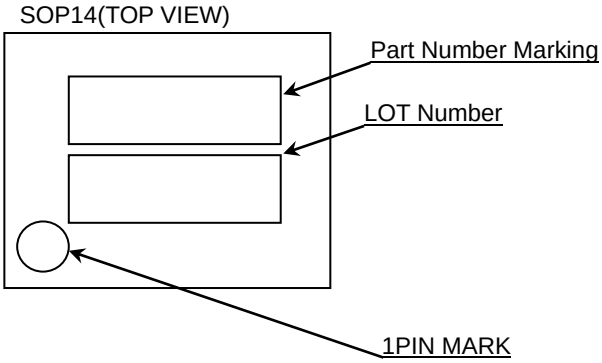

TSSOP-B8J(TOP VIEW)

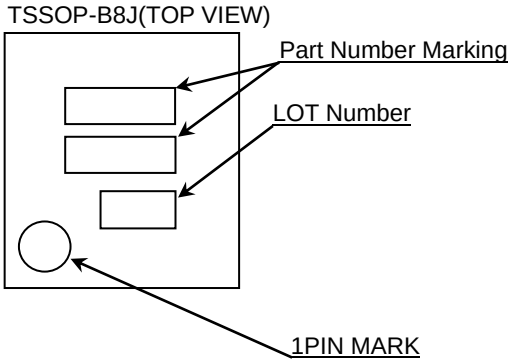

SOP-J14(TOP VIEW)

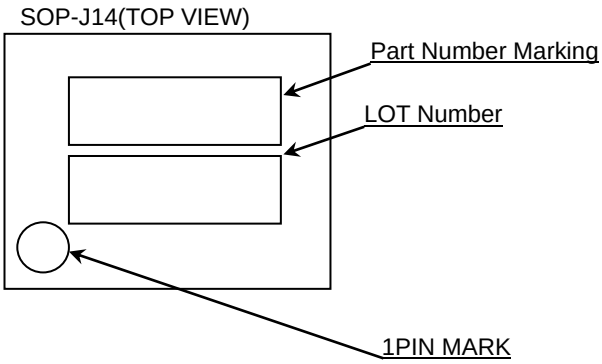

MSOP8(TOP VIEW)

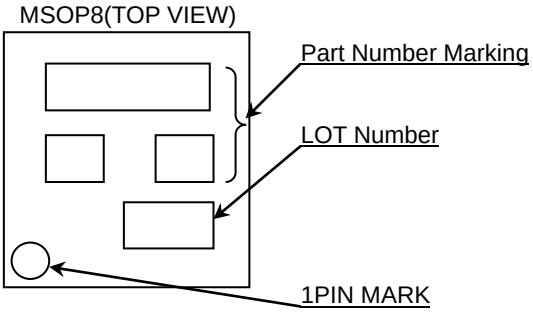

SSOP-B14(TOP VIEW)

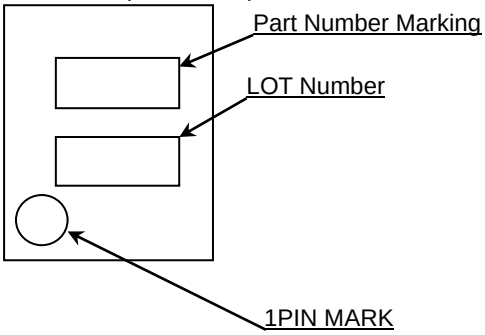

TSSOP-B14J (TOP VIEW)

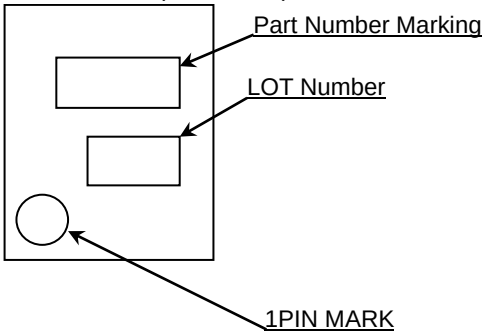

©2015 ROHM Co., Ltd. All rights reserved.

Downloaded from Arrow.com.

Marking Diagram – continued

Product Name		Package Type	Marking
LM358	F	SOP8	358L
	FJ	SOP-J8	
	FV	SSOP-B8	
	FVT	TSSOP-B8	
	FVJ	TSSOP-B8J	
	FVM	MSOP8	
LM324	F	SOP14	LM324F
	FJ	SOP-J14	LM324FJ
	FV	SSOP-B14	324L
	FVJ	TSSOP-B14J	
LM2904	F	SOP8	2904L
	FJ	SOP-J8	
	FV	SSOP-B8	04L
	FVT	TSSOP-B8	2904L
	FVJ	TSSOP-B8J	
	FVM	MSOP8	
LM2902	F	SOP14	LM2902F
	FJ	SOP-J14	LM2902FJ
	FV	SSOP-B14	2902L
	FVJ	TSSOP-B14J	

©2015 ROHM Co., Ltd. All rights reserved.

Downloaded from Arrow.com.

Revision History

Date	Revision	Changes
10.Jul.2015	001	New Release
09.Oct.2015	002	LM358FJ, LM358FV, LM358FVT, and LM324F are added
10.Feb.2016	003	LM2904xxx (F, FJ, FV, FVT, FVM, FVJ), and LM358xxx (FVM, FVJ) are added
06.Jun.2016	004	LM324xxx (FJ, FV, FVJ), and LM2902xxx (F, FJ, FV, FVJ) are added
01.Aug.2016	005	Correction of erroneous description (P.4 Icc Full Range 1.5→2.5mA) Delete Land Pattern Data(P.44)
11.Dec.2020	006	P.44-2, 44-3, Updated packages and part numbers.

©2015 ROHM Co., Ltd. All rights reserved.

Downloaded from Arrow.com.

Ordering Information

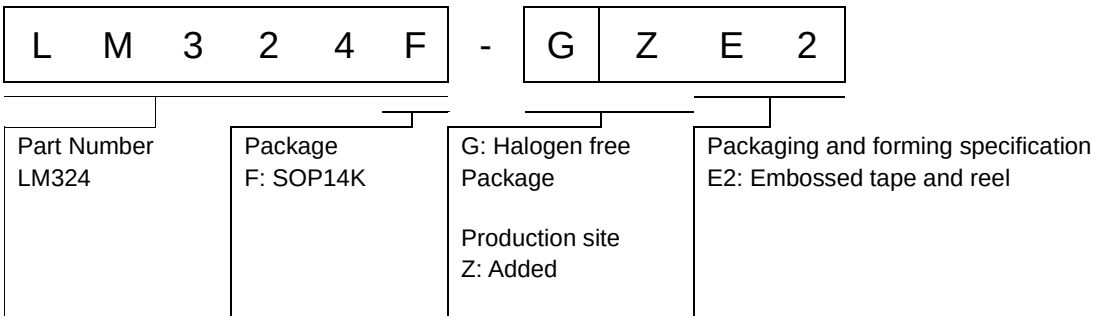

Marking Diagram

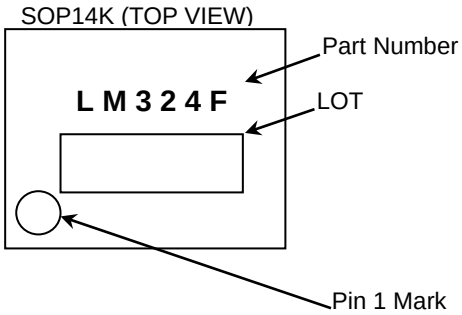

©2015 ROHM Co., Ltd. All rights reserved.

Downloaded from Arrow.com.

Physical Dimension and Packing Information

Package Name	SOP14K

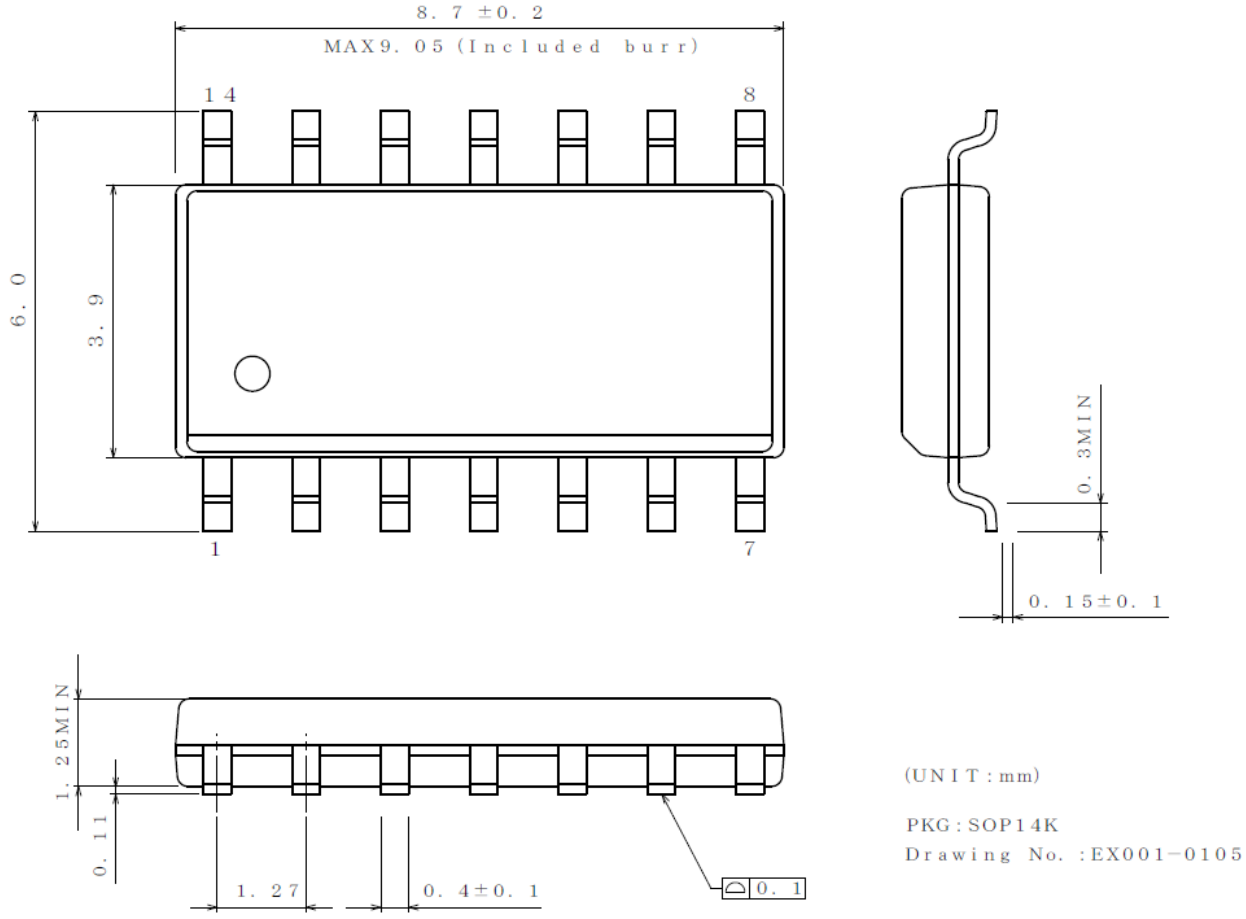

< Tape and Reel Information >

Tape	Embossed carrier tape
Quantity	2500pcs
Direction of feed	E2 The direction is the pin 1 of product is at the upper left when you hold reel on the left hand and you pull out the tape on the right hand

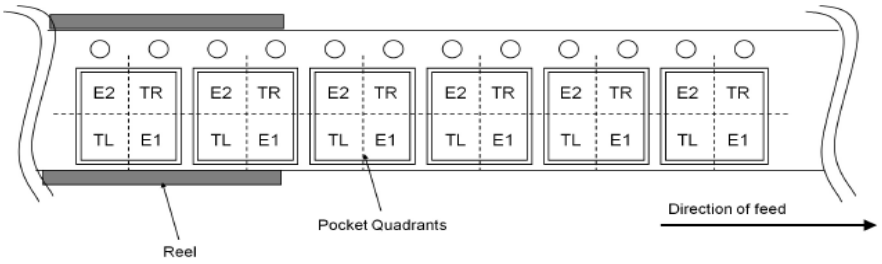

©2015 ROHM Co., Ltd. All rights reserved.

Downloaded from Arrow.com.

Notice

Precaution on using ROHM Products

1. Our Products are designed and manufactured for application in ordinary electronic equipment (such as AV equipment, OA equipment, telecommunication equipment, home electronic appliances, amusement equipment, etc.). If you intend to use our Products in devices requiring extremely high reliability (such as medical equipment (Note 1), transport equipment, traffic equipment, aircraft/spacecraft, nuclear power controllers, fuel controllers, car equipment including car accessories, safety devices, etc.) and whose malfunction or failure may cause loss of human life, bodily injury or serious damage to property ("Specific Applications"), please consult with the ROHM sales representative in advance. Unless otherwise agreed in writing by ROHM in advance, ROHM shall not be in any way responsible or liable for any damages, expenses or losses incurred by you or third parties arising from the use of any ROHM's Products for Specific Applications.

(Note1) Medical Equipment Classification of the Specific Applications

JAPAN	USA	EU	CHINA
CLASSⅢ	CLASSⅢ	CLASSⅡb	CLASSⅢ
CLASSⅣ		CLASSⅢ	

2. ROHM designs and manufactures its Products subject to strict quality control system. However, semiconductor products can fail or malfunction at a certain rate. Please be sure to implement, at your own responsibilities, adequate safety measures including but not limited to fail-safe design against the physical injury, damage to any property, which a failure or malfunction of our Products may cause. The following are examples of safety measures:
   [a] Installation of protection circuits or other protective devices to improve system safety
   [b] Installation of redundant circuits to reduce the impact of single or multiple circuit failure

3. Our Products are designed and manufactured for use under standard conditions and not under any special or extraordinary environments or conditions, as exemplified below. Accordingly, ROHM shall not be in any way responsible or liable for any damages, expenses or losses arising from the use of any ROHM's Products under any special or extraordinary environments or conditions. If you intend to use our Products under any special or extraordinary environments or conditions (as exemplified below), your independent verification and confirmation of product performance, reliability, etc, prior to use, must be necessary:
   [a] Use of our Products in any types of liquid, including water, oils, chemicals, and organic solvents
   [b] Use of our Products outdoors or in places where the Products are exposed to direct sunlight or dust
   [c] Use of our Products in places where the Products are exposed to sea wind or corrosive gases, including Cl_2, H_2S, NH_3, SO_2, and NO_2
   [d] Use of our Products in places where the Products are exposed to static electricity or electromagnetic waves
   [e] Use of our Products in proximity to heat-producing components, plastic cords, or other flammable items
   [f] Sealing or coating our Products with resin or other coating materials
   [g] Use of our Products without cleaning residue of flux (Exclude cases where no-clean type fluxes is used. However, recommend sufficiently about the residue.) ; or Washing our Products by using water or water-soluble cleaning agents for cleaning residue after soldering
   [h] Use of the Products in places subject to dew condensation

4. The Products are not subject to radiation-proof design.

5. Please verify and confirm characteristics of the final or mounted products in using the Products.

6. In particular, if a transient load (a large amount of load applied in a short period of time, such as pulse, is applied, confirmation of performance characteristics after on-board mounting is strongly recommended. Avoid applying power exceeding normal rated power; exceeding the power rating under steady-state loading condition may negatively affect product performance and reliability.

7. De-rate Power Dissipation depending on ambient temperature. When used in sealed area, confirm that it is the use in the range that does not exceed the maximum junction temperature.

8. Confirm that operation temperature is within the specified range described in the product specification.

9. ROHM shall not be in any way responsible or liable for failure induced under deviant condition from what is defined in this document.

Precaution for Mounting / Circuit board design

1. When a highly active halogenous (chlorine, bromine, etc.) flux is used, the residue of flux may negatively affect product performance and reliability.

2. In principle, the reflow soldering method must be used on a surface-mount products, the flow soldering method must be used on a through hole mount products. If the flow soldering method is preferred on a surface-mount products, please consult with the ROHM representative in advance.

For details, please refer to ROHM Mounting specification

© 2015 ROHM Co., Ltd. All rights reserved.

Downloaded from Arrow.com.

Precautions Regarding Application Examples and External Circuits

1. If change is made to the constant of an external circuit, please allow a sufficient margin considering variations of the characteristics of the Products and external components, including transient characteristics, as well as static characteristics.

2. You agree that application notes, reference designs, and associated data and information contained in this document are presented only as guidance for Products use. Therefore, in case you use such information, you are solely responsible for it and you must exercise your own independent verification and judgment in the use of such information contained in this document. ROHM shall not be in any way responsible or liable for any damages, expenses or losses incurred by you or third parties arising from the use of such information.

Precaution for Electrostatic

This Product is electrostatic sensitive product, which may be damaged due to electrostatic discharge. Please take proper caution in your manufacturing process and storage so that voltage exceeding the Products maximum rating will not be applied to Products. Please take special care under dry condition (e.g. Grounding of human body / equipment / solder iron, isolation from charged objects, setting of Ionizer, friction prevention and temperature / humidity control).

Precaution for Storage / Transportation

1. Product performance and soldered connections may deteriorate if the Products are stored in the places where:
   [a] the Products are exposed to sea winds or corrosive gases, including Cl_2, H_2S, NH_3, SO_2, and NO_2
   [b] the temperature or humidity exceeds those recommended by ROHM
   [c] the Products are exposed to direct sunshine or condensation
   [d] the Products are exposed to high Electrostatic

2. Even under ROHM recommended storage condition, solderability of products out of recommended storage time period may be degraded. It is strongly recommended to confirm solderability before using Products of which storage time is exceeding the recommended storage time period.

3. Store / transport cartons in the correct direction, which is indicated on a carton with a symbol. Otherwise bent leads may occur due to excessive stress applied when dropping of a carton.

4. Use Products within the specified time after opening a humidity barrier bag. Baking is required before using Products of which storage time is exceeding the recommended storage time period.

Precaution for Product Label

A two-dimensional barcode printed on ROHM Products label is for ROHM's internal use only.

Precaution for Disposition

When disposing Products please dispose them properly using an authorized industry waste company.

Precaution for Foreign Exchange and Foreign Trade act

Since concerned goods might be fallen under listed items of export control prescribed by Foreign exchange and Foreign trade act, please consult with ROHM in case of export.

Precaution Regarding Intellectual Property Rights

1. All information and data including but not limited to application example contained in this document is for reference only. ROHM does not warrant that foregoing information or data will not infringe any intellectual property rights or any other rights of any third party regarding such information or data.

2. ROHM shall not have any obligations where the claims, actions or demands arising from the combination of the Products with other articles such as components, circuits, systems or external equipment (including software).

3. No license, expressly or implied, is granted hereby under any intellectual property rights or other rights of ROHM or any third parties with respect to the Products or the information contained in this document. Provided, however, that ROHM will not assert its intellectual property rights or other rights against you or your customers to the extent necessary to manufacture or sell products containing the Products, subject to the terms and conditions herein.

Other Precaution

1. This document may not be reprinted or reproduced, in whole or in part, without prior written consent of ROHM.

2. The Products may not be disassembled, converted, modified, reproduced or otherwise changed without prior written consent of ROHM.

3. In no event shall you use in any way whatsoever the Products and the related technical information contained in the Products or this document for any military purposes, including but not limited to, the development of mass-destruction weapons.

4. The proper names of companies or products described in this document are trademarks or registered trademarks of ROHM, its affiliated companies or third parties.

© 2015 ROHM Co., Ltd. All rights reserved.

Downloaded from Arrow.com.

General Precaution

1. Before you use our Products, you are requested to carefully read this document and fully understand its contents. ROHM shall not be in any way responsible or liable for failure, malfunction or accident arising from the use of any ROHM's Products against warning, caution or note contained in this document.

2. All information contained in this document is current as of the issuing date and subject to change without any prior notice. Before purchasing or using ROHM's Products, please confirm the latest information with a ROHM sales representative.

3. The information contained in this document is provided on an "as is" basis and ROHM does not warrant that all information contained in this document is accurate and/or error-free. ROHM shall not be in any way responsible or liable for any damages, expenses or losses incurred by you or third parties resulting from inaccuracy or errors of or concerning such information.

© 2015 ROHM Co., Ltd. All rights reserved.

Downloaded from Arrow.com.