Alle Rechte vorbehalten/ *All rights reserved*

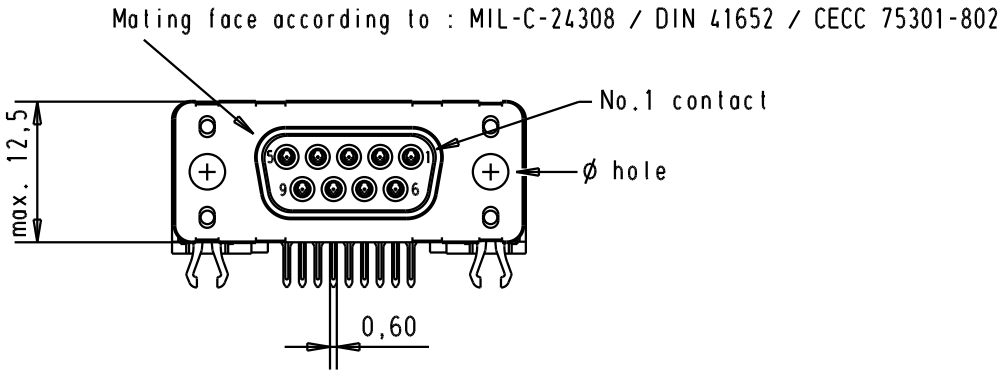


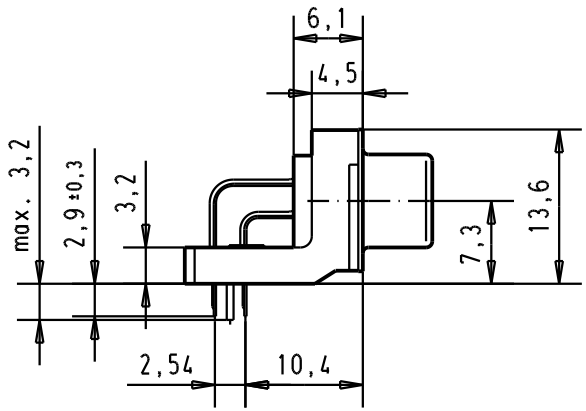


Printed board layout
component side

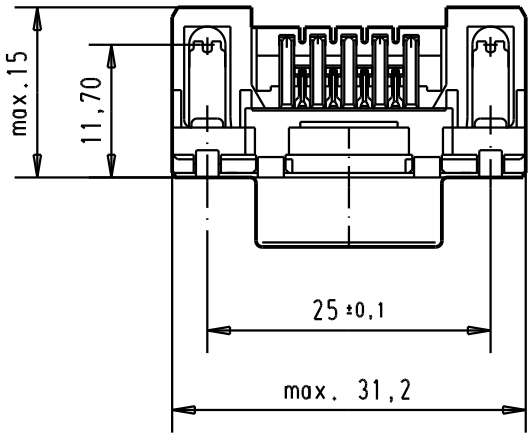


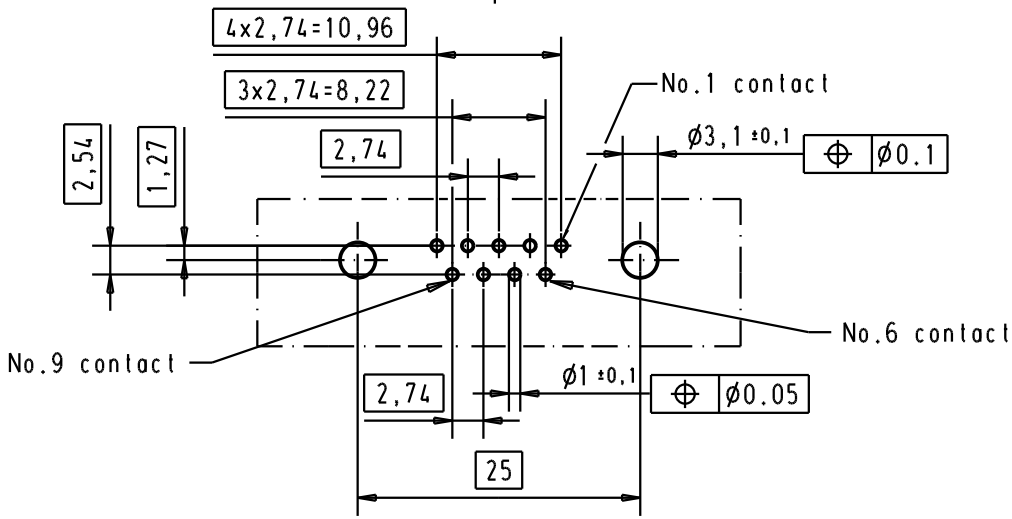


Connector retention and insertion forces on the PCB = 25 / 80 newtons

| | | | | | |
|---|---|---|---|---|---|
| 09 66 156 3610 | 3,1 ± 0,1 | 1 | | | |
| 09 66 156 6610 | 3,1 ± 0,1 | 2 | 31892 | 05/05/04 | JH |
| 09 66 156 7610 | 3,1 ± 0,1 | 3 | 29723 | 05/03/02 | CV |
| Part number | ø hole | Performance level | Mod. | Dat. | Name |

| | Dat. | Name |
|---|---|---|
| Detail. | 05/03/02 | CV |
| Insp. | | |
| Stand. | | |

All Dim. in mm
Orig. Size DIN A 4

D-Sub, high temperature, female, standard, 9 poles, with solder pins 2.9, holes and grounding board lock.

Maßstab/ *Scale* 1.5:1

HARTING EURL
F-95972 Paris

TB 0966156x61x

Sub.

Blatt/ *Page* 4

Downloaded from Arrow.com.